TECHNICAL MANUAL

FIELD MAINTENANCE MANUAL FOR TACTICAL WATER PURIFICATION SYSTEM (TWPS) ARMY NSN 4610-01-488-9656 MARINE CORPS NSN 4610-01-488-6961

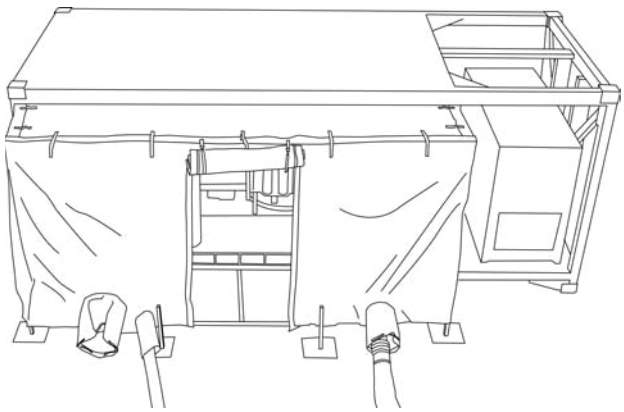

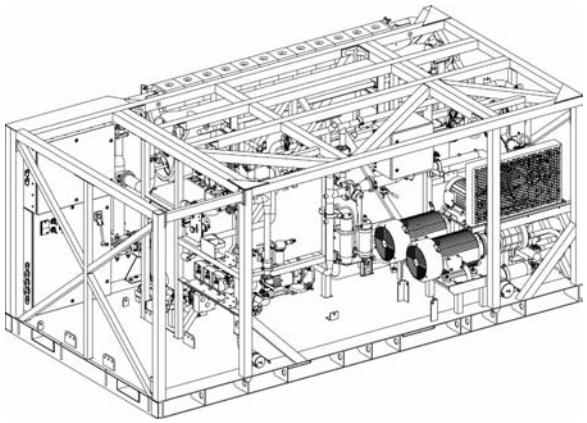

*This manual along with TM 10-4610-309-10, dated 15 May 2008 supersedes TM 10-4610-309-14, dated 1 May 2005 including all changes.

DISTRIBUTION STATEMENT A - Approved for public release; distribution is unlimited.

HEADQUARTERS, DEPARTMENT OF THE ARMY
HEADQUARTERS, U.S. MARINE CORPS MAY 2008

PCN 184 108021 00

WARNING SUMMARY

This warning summary contains general safety warnings and hazardous materials warnings that must be understood and applied during operation and maintenance of this equipment. Failure to observe these warnings could result in serious injury or death to personnel.

WARNING

HOT SURFACES

The muffler/exhaust system may be hot. Do not touch the muffler/exhaust system if it is hot. Failure to observe this warning can result in burns.

WARNING

TWO PERSON LIFT

Two-person lift. Two persons must move the diesel engine assembly. Lift with your legs, not your back. Failure to observe this warning may result in back injury.

WARNING

FIRE HAZARD

If the engine has been running, it may be hot enough to ignite fuel as it is drained from the fuel tank. Make sure that the engine and its parts are cool to the touch before draining fuel from the fuel tank. Failure to observe this warning can result in a fire.

WARNING

PROJECTILE HAZARD

If it is necessary to perform the next step, be sure to reinstall the retaining plate and nuts. If they are not reinstalled, the compression from the engine could cause the fuel injection valve to fly out forcefully and could result in injury.

WARNING

ELECTRICAL / MECHANICAL HAZARD

The pump motor must be turned off and disconnected from its source of electrical power in a specific order before performing maintenance on the pump. Failure to observe this warning may result in serious injury or death from electrocution or injury from moving parts.

LIST OF EFFECTIVE PAGES/WORK PACKAGES

Note: This manual supersedes TM 10-4610-309-14 dated 1 May 2005. Zero in the "Change No." column indicates and original page or work package.

Date of issue for the original manual is:

Original . . . 0 . . . 15 May 2008

TOTAL NUMBER OF PAGES FOR FRONT AND REAR MATTER IS 20 AND TOTAL NUMBER OF WORK PACKAGES IS 41 CONSISTING OF THE FOLLOWING:

Page/WP No.	Change No.
Front Cover	0
Warning Summary (2 pgs)	0
A /B blank	0
i – iii	0
Chapter 1 title page	0
WP 0001(4 pgs)	0
WP 0002 (38 pgs)	0
WP 0003 (34 pgs)	0
Chapter 2 title page	0
WP 0004 (50 pgs)	0
WP 0005 (18 pgs)	0
Chapter 3 title page	0
WP 0006 (4 pgs)	0
WP 0007 (2 pgs)	0
WP 0008 (2 pgs)	0
WP 0009 (24 pgs)	0
WP 0010 (2 pgs)	0
WP 0011 (26 pgs)	0
WP 0012 (19 pgs)	0
WP 0013 (32 pgs)	0
WP 0014 (40 pgs)	0
WP 0015 (30 pgs)	0
WP 0016 (22 pgs)	0
WP 0017 (28 pgs)	0
WP 0018 (18 pgs)	0
WP 0019 (18 pgs)	0
WP 0020 (20 pgs)	0
WP 0021 (24 pgs)	0
WP 0022 (14 pgs)	0
WP 0023 (24 pgs)	0
WP 0024 (30 pgs)	0
WP 0025 (26 pgs)	0
WP 0026 (8 pgs)	0
WP 0027 (28 pgs)	0
WP 0028 (2 pgs)	0
WP 0029 (14 pgs)	0
WP 0030 (10 pgs)	0
WP 0031 (16 pgs)	0
WP 0032 (6 pgs)	0
WP 0033 (4 pgs)	0
WP 0034 (4 pgs)	0
Chapter 4 title page	0
WP 0035 (2 pgs)	0
WP 0036 (4 pgs)	0
WP 0037 (8 pgs)	0
WP 0038 (4 pgs)	0
WP 0039 (4 pgs)	0
WP 0040 (6 pgs)	0
WP 0041 (2 pgs)	0
Glossary-1	0
Index-1 – Index-8	0
Warranty (4 pgs)	0
Foldouts (24 pgs)	0

*Zero in this column indicates an original page or work package.

A/B BLANK

HEADQUARTERS,
DEPARTMENT OF THE ARMY
U.S. MARINE CORPS
WASHINGTON D.C., 15 MAY 2008

TECHNICAL MANUAL

FIELD MAINTENANCE MANUAL FOR TACTICAL WATER PURIFICATION SYSTEM ARMY NSN 4610-01-488-9656 MARINE CORPS NSN 4610-01-488-6961

REPORTING ERRORS AND RECOMMENDING IMPROVEMENTS

You can help improve this publication. If you find any mistakes or if you know of a way to improve the procedures, please let us know. Submit your DA Form 2028 (Recommended Changes to Equipment Technical Publications), through the Internet, on the Army Electronic Product Support (AEPS) website. The Internet address is http://aeps.ria.army.mil. If you need a password, scroll down and click on "ACCESS REQUEST FORM". The DA Form 2028 is located in the ONLINE FORMS PROCESSING section of the AEPS. Fill out the form and click on SUBMIT. Using this form on the AEPS will enable us to respond quicker to your comments and better manage the DA Form 2028 program. You may also mail, fax or E-mail your letter, DA Form 2028 direct to: Technical Publication Information Office, TACOM-RI, 1 Rock Island Arsenal, Rock Island, IL 61299-7630. The email address is TACOM-TECH-PUBS@conus.army.mil. The fax number is DSN 793-0726 or Commercial (309) 782-0726.

*This manual along with TM 10-4610-309-10, dated 15 May 2008 supersedes TM 10-4610-309-14, dated 1 May 2008 including all changes.

DISTRIBUTION STATEMENT A - Approved for public release; distribution is unlimited.

TABLE OF CONTENTS

WP Sequence No.

WARNING SUMMARY

HOW TO USE THIS MANUAL

CHAPTER 1 – GENERAL INFORMATION, EQUIPMENT DESCRIPTION, AND THEORY OF OPERATION

General Information 0001 00
Equipment Description and Data 0002 00
Theory of Operation 0003 00

CHAPTER 2 – FIELD TROUBLESHOOTING

Field Troubleshooting Procedures – Tactical Water Purification System (TWPS) 0004 00
Field Troubleshooting Procedures – TWPS Control Systems 0005 00

CHAPTER 3 – FIELD MAINTENANCE PROCEDURES

Service Upon Receipt 0006 00
Preventive Maintenance Checks and Services (PMCS) Introduction 0007 00
Preventive Maintenance Checks and Services (PMCS) 0008 00
Raw Water System Field Maintenance Procedures 0009 00
Ocean Intake Structure System (OISS) Field Maintenance Procedures 0010 00
Diesel Engine and Fuel Tank Assembly Field Maintenance Procedures 0011 00
Micro-Filtration System Field Maintenance Procedures 0012 00
Reverse Osmosis System Field Maintenance Procedures 0013 00
High Pressure Pump, Including Metal-body Field Maintenance Procedures 0014 00
Air System, High Pressure Field Maintenance Procedures 0015 00
Air System, Reduced Pressure Field Maintenance Procedures 0016 00
Air Compressor Field Maintenance Procedures 0017 00
Chemical Injection System Field Maintenance Procedures 0018 00
Product Water Distribution System Field Maintenance Procedures 0019 00
Operating Control System Top Panel Field Maintenance Procedures 0020 00
Operating Control System Sub Panel Field Maintenance Procedures 0021 00
Feed Flow Control Panel Field Maintenance Procedures 0022 00
Control Instruments Field Maintenance Procedures 0023 00
Power Distribution System Field Maintenance Procedures 0024 00
Cold Weather System Field Maintenance Procedures 0025 00

TABLE OF CONTENTS - Continued

WP Sequence No.

Flat Rack and Tactical Quiet Generator Field Maintenance Procedures 0026 00
General Field Maintenance Procedures 0027 00
Wire Diagrams 0028 00
Diesel Engine Field Maintenance Procedures 0029 00
Micro-Filtration System Field Maintenance Procedures 0030 00
Reverse Osmosis System Field Maintenance Procedures 0031 00
Tactical Water Purification System (TWPS) Skid, Flat Rack, and Tactical Quiet Generator (TQG) Field Maintenance 0032 00
Cold Weather System Field Maintenance Procedures 0033 00
General Field Maintenance Procedures 0034 00

CHAPTER 4 – SUPPORTING INFORMATION

References 0035 00
Maintenance Allocation Chart (MAC) Introduction 0036 00
Maintenance Allocation Chart (MAC) Tables 0037 00
Expendable and Durable Items List 0038 00
Reverse Osmosis Element Performance Log 0039 00
Reverse Osmosis % Clean Calculation 0040 00
Additional Authorization List 0041 00
Glossary ..... Glossary – 1
Index ..... Index – 1
Warranty ..... Warranty – 1
Foldouts ..... FO – 1

HOW TO USE THIS MANUAL

This manual contains general information, operating instructions, Preventive Maintenance Checks and Services (PMCS), and maintenance/repair instructions for the Tactical Water Purification System (TWPS).

Front matter consists of a warning summary, table of contents, and instructions on how to use this manual. A separate work package, 0001 00 contains general information on the TWPS equipment including maintenance forms, records, and reports; instructions for recommending equipment improvements; corrosion prevention and control; ozone depleting substances and procedures for material destruction to prevent enemy use. Chapter 1 provides a TWPS equipment description and theory of operation. Chapter 2 contains troubleshooting procedures. Chapter 3 contains Field Maintenance instructions. Chapter 4 contains the Maintenance Allocation Chart (MAC), lists of Expendable and Durable Items, tools and other supporting information. Rear matter consists of the alphabetical index, DA Form 2028 and authentication page, and back cover.

Manual Organization and Page Numbering

This manual is divided into eight major chapters that detail the topics mentioned above. Within each chapter are work packages covering a wide range of topics. Each work package is numbered sequentially starting at page 1, and has its own page numbering scheme that is independent of the page numbering used by other work packages. Each page of a work package has a page number of the form “XXXX YY-ZZ”, where “XXXX YY” is the work package number (e.g. 0010 00 is work package 10) and “ZZ” represents the number of the page within that work package. A page number such as “0010 00-1/2 Blank” means that page 1 of that work package contains information but page 2 has been intentionally left blank.

Finding Information

The Table of Contents permits the reader to quickly find information in the manual. The reader should start here first when looking for a specific topic. The Table of Contents lists the topics contained within each chapter and the work package sequence number where it can be found. The index, located at the back of the manual, lists topics in alphabetical order and identifies the work packages where the information is located.

CHAPTER 1

GENERAL INFORMATION,

EQUIPMENT DESCRIPTION AND

THEORY OF OPERATION

FOR

TACTICAL WATER PURIFICATION SYSTEM (TWPS)

TACTICAL WATER PURIFICATION SYSTEM (TWPS) GENERAL INFORMATION

0001 00

SCOPE

Equipment Covered

This technical manual contains instructions for Field Level corrective maintenance for the 1500 Tactical Water Purification System (TWPS) and its associated equipment for both the Army version (A-TWPS) and the Marine Corps version (MC-TWPS).

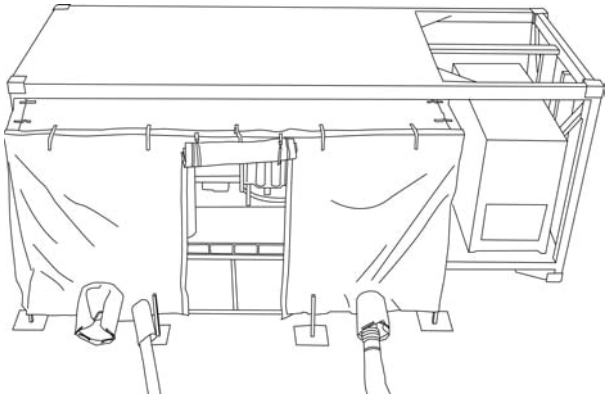

Figure 1. Army Tactical Water Purification System (A-TWPS).

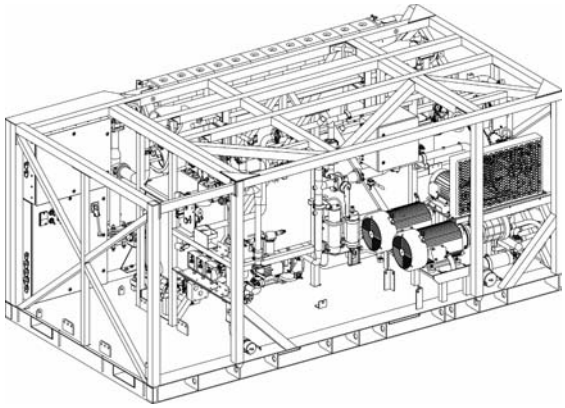

Figure 2. Marine Corps Tactical Water Purification System (MC-TWPS).

Type of Manual

Field Level Maintenance Manual. The Repair Parts and Special Tools List is included in a separate manual, TM 10-4610-309-23P (Army) and TM 10802A-OI/2A (Marine Corps).

Equipment Name and Model Number

Tactical Water Purification System. This manual covers two models:

- A-TWPS, NSN 4610-01-488-9656
- MC-TWPS, NSN 4610-01-488-6961

TACTICAL WATER PURIFICATION SYSTEM (TWPS) GENERAL INFORMATION

0001 00

The information in this manual applies to both models. When information applies to only one model or the other, a statement similar to “A-TWPS ONLY” or “MC-TWPS ONLY” is placed with the applicable statement.

Purpose of Equipment

The 1500 Gallons Per Hour (GPH) Tactical Water Purification System (1500 TWPS) is a fully contained mobile water purification system capable of purifying, storing, and dispensing water meeting Tri-Service Field Water Quality Standards for long term consumption. The TWPS is intended to supply potable water to ground, amphibious and air-mobile units of the U.S. Army and Marine Corps. It can also be used to provide potable water support to civilian agencies or host nations for emergencies, disaster relief, humanitarian efforts, and peacekeeping missions.

The TWPS can produce drinking water from a broad range of water sources including:

- Fresh water containing dirt (suspended solids) and micro-organisms
- Brackish water containing dirt, micro-organisms and salt
- Seawater containing dirt, micro-organisms and a high concentration of salt
- Freshwater containing nuclear, biological, or chemical warfare (NBC) agents.

MAINTENANCE FORMS, RECORDS, REPORTS

Department of the Army forms and procedures used for the equipment maintenance will be those prescribed by DA PAM 738-750, The Army Maintenance Management System.

REPORTING EQUIPMENT IMPROVEMENT RECOMMENDATIONS (EIR)

If your TWPS needs improvement let us know. Send us an EIR. You, the user, are the only one who can tell us what you don’t like about your equipment. Let us know why you don’t like the design or performance. Put it on a SF 268 (Product Quality Deficiency Report). Mail it to the address specified in DA PAM 738-750, Functional Users Manual for the Army Maintenance Management System (TAMMS), or as specified by the acquiring activity. We will send you a reply.

CORROSION PREVENTION AND CONTROL (CPC)

Corrosion Prevention and Control (CPC) of Army material is a continuing concern. It is important that any corrosion problems with this item be reported so that the problem can be corrected and improvements can be made to prevent the problem in future items.

While corrosion is typically associated with rusting of metals, it can also include deterioration of other material, such as rubber and plastic. Unusual cracking, softening, swelling, or breaking of these materials may be a corrosion problem.

If a corrosion problem is identified, it can be reported using SF 368, Product Quality Deficiency Report. Use of key words such as “corrosion”, “rust”, “deterioration”, or “cracking” will ensure that the information is identified as a CPC problem. The form should be submitted to the address specified in DA PAM 738-750, Functional Users Manual for the Army Maintenance Management System (TAMMS).

OZONE DEPLETING SUBSTANCES (ODS)

The continued use of ODS has been prohibited by Executive Order 12856 of 3 August 1993. The use of ODS in Army IETMs is prohibited. A listing of these substances will be provided by the acquiring activity.

DESTRUCTION OF ARMY MATERIAL TO PREVENT ENEMY USE

For general destruction procedures for this equipment, refer to TM 750 224-3, Procedures for Destruction of Equipment to Prevent Enemy Use.

PREPARATION FOR STORAGE OR SHIPMENT

Refer to work packages (0029 through 0033, TM 10-4610-309-10) for preparation for movement and preparation for storage instructions.

WARRANTY INFORMATION

Refer to the Warranty Terms and Procedure included at the back of this manual.

LIST OF ABBREVIATIONS/ACRONYMS

The following abbreviations/acronyms are used in this manual:

TERM	DEFINITION	TERM	DEFINITION
AC	Alternating Current	NSN	National Stock Number
amp	ampere	OISS	Ocean Intake Structure System
BII	Basic Issue Item	OCP	Operator Control Panel
CAGEC	Commercial and Government Entity Code	ODS	Ozone Depleting Substances
		OM	Operator Maintenance
COEI	Components of End Item	PDP	Power Distribution Panel
CPC	Corrosion Prevention and Control	PLC	Programmable Logic Controller
DC	Direct Current	PMCS	Preventive Maintenance Checks and Services
DS	Direct Support		
EIR	Equipment Improvement Recommendation	P/N	Part Number
		psig	pounds per square inch gauge
ft.	foot, feet	Qty	Quantity
gal.	gallon (U.S.)	RO	Reverse Osmosis
gpm	gallons per minute	RPSTL	Repair Parts & Special Tools List
HP	High Pressure	TDS	Total Dissolved Solids
in.	inch, inches	TQG	Tactical Quiet Generator
lb.	pound	TWPS	Tactical Water Purification System
MAC	Maintenance Allocation Chart	uS/cm	Conductivity unit of measurement, microSeimens per centimeter
MF	Micro-Filtration or Micro-Filter	UM	Unit Maintenance
NBC	Nuclear, Biological, and Chemical	v	Volts

END OF WORK PACKAGE

EQUIPMENT CHARACTERISTICS, CAPABILITIES, AND FEATURES

The 1500 Gallons Per Hour (GPH) Tactical Water Purification System (1500 TWPS) is a fully contained mobile water purification system capable of purifying, storing, and dispensing water meeting Tri-Service Field Water Quality Standards for long term consumption. The TWPS is intended to supply potable water to ground, amphibious and air-mobile units of the U.S. Army and Marine Corps. It can also be used to provide potable water support to civilian agencies or host nations for emergencies, disaster relief, humanitarian efforts, and peacekeeping missions.

The TWPS can produce drinking water from a broad range of water sources including:

- Fresh water containing dirt (suspended solids) and micro-organisms
- Brackish water containing dirt, micro-organisms and salt
- Seawater containing dirt, micro-organisms and a high concentration of salt
- Freshwater containing nuclear, biological, or chemical warfare (NBC) agents.

The TWPS is designed to produce as much as 1500 gallons per hour (25 GPM) of potable water from a fresh or brackish water source and 1200 gallons per hour (25 GPM) from a seawater source. The TWPS design point of reference is 1500 GPH of potable water from a fresh or brackish water source at 50 degrees F that contains up to 5,000 mg/l TDS (total dissolved solids), and 1200 GPH from a seawater source at 50 degrees F that contains 45,000 mg/l TDS. Because water production is a function of water temperature and the type of water being processed, water production will vary with the characteristics of the water source. A summary of production performance with various raw water sources is shown in Table 1.

Table 1. TWPS Water Production Performance Characteristics.

RAW WATER CHARACTERISTICS			POTABLE WATER PRODUCTION (normal)
Source	Composition	Temperature	
Surface water	Up to 20,000 mg/l TDS and up to 150 NTU	32 to 95° F	1500 GPH
Ground water	Up to 2500 mg/l TDS	32 to 95° F	1500 GPH
Ground water	Over 2500 mg/l TDS and up to 150 NTU	50 to 95° F	1200 GPH
Seawater	35,000 mg/l TDS	32 to 95° F	1200 GPH
Seawater	45,000 mg/l TDS	50 to 95° F	1200 GPH
Seawater	45,000 mg/l TDS	32 to 50° F	1000 GPH
Seawater	60,000 mg/l TDS	77° F	950 GPH

The TWPS is fielded in two versions: a Marine Corps version designated MC-TWPS and an Army version designated A-TWPS.

MC-TWPS

The MC-TWPS (shown packed out for deployment in Figure 1) is a basic skid-mounted unit with all BII and a 6,000-gallon water storage and distribution capability. The MC-TWPS may be powered by a 60 kW Tactical Quiet Generator (TQG) Model 806B, NSN 6115-01-462-0291 or a power distribution grid. It is capable of transport by the MTVR truck, (MK23 or MK 25, NSN: 2320-01-465-2174, NSN: 2320-01-465-2176). Forklift pockets and weight allow handling with the standard 5-ton forklift. The MC-TWPS is typically transported with its General Purpose Cover installed (see Figure 2). Roof support sheets are installed on top of the TWPS under the cover to prevent the cover from sagging from accumulations of rain or snow.

WARNING

Do not walk on the roof support sheets. They are not designed to support the weight of a person. Failure to observe this warning may result in injury or damage to equipment.

For helicopter transportation, the General Purpose Cover and roof support sheets are removed and cargo nets are installed (see Figure 3).

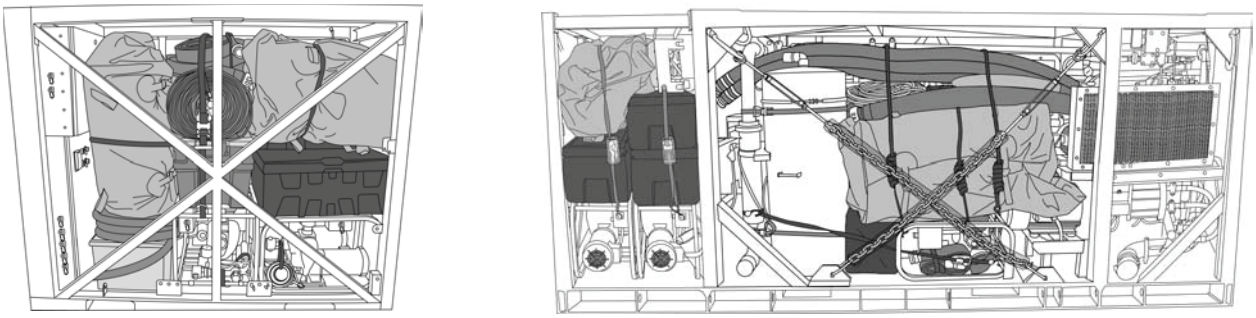

Figure 1. Left End and Front Views of the MC-TWPS Packed Out.

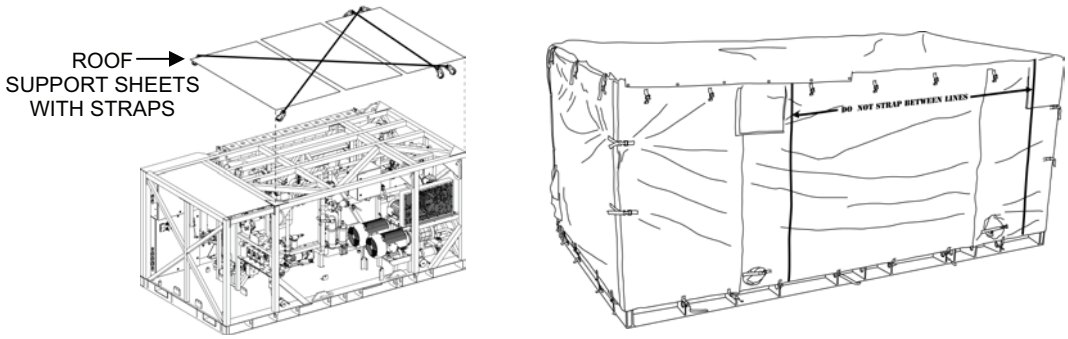

Figure 2. MC-TWPS with Roof Support Sheets and General Purpose Cover Installed.

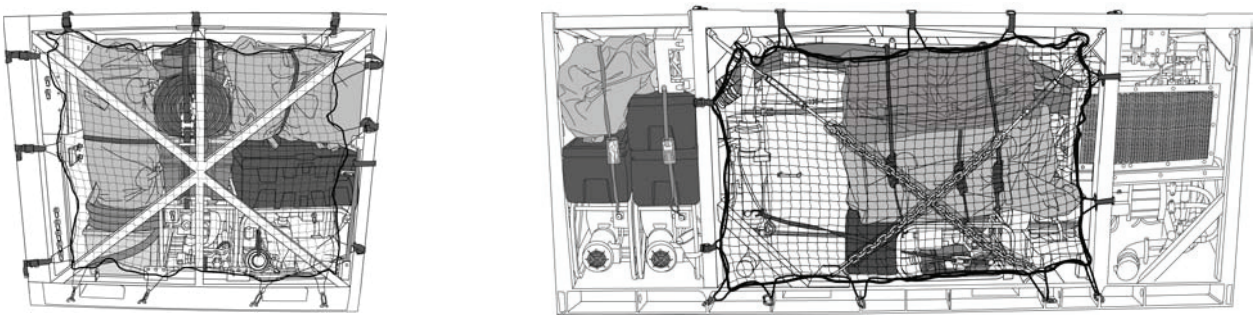

Figure 3. Left End and Front Views of MC-TWPS with Cargo Nets Installed.

The MC-TWPS General Purpose Cover is a single piece, water-proof, fabric covering that can be used during deployment to shield the equipment from precipitation and blowing dust and sand (see Figure 4). Straps inside and outside the cover are used to secure the cover to the TWPS frame. Zippered and hook and loop seams at the four corners and in two locations at the front (1) make it possible to separate and roll up and secure individual wall panels for access or ventilation. By releasing snaps and straps around the top of the cover over the operator station, the top can be expanded at that end so that a roof over the operator station can be raised without removing the cover. Sleeves with a hook and loop seam and cinch cord are incorporated to provide access for connecting power cables (2) and inlet (3) and discharge (4) hoses to the TWPS. Hook and loop panels are incorporated to provide access to four rail transport tie-down rings (5). A fifth panel (6) provides access to lift and tie-down instruction plates.

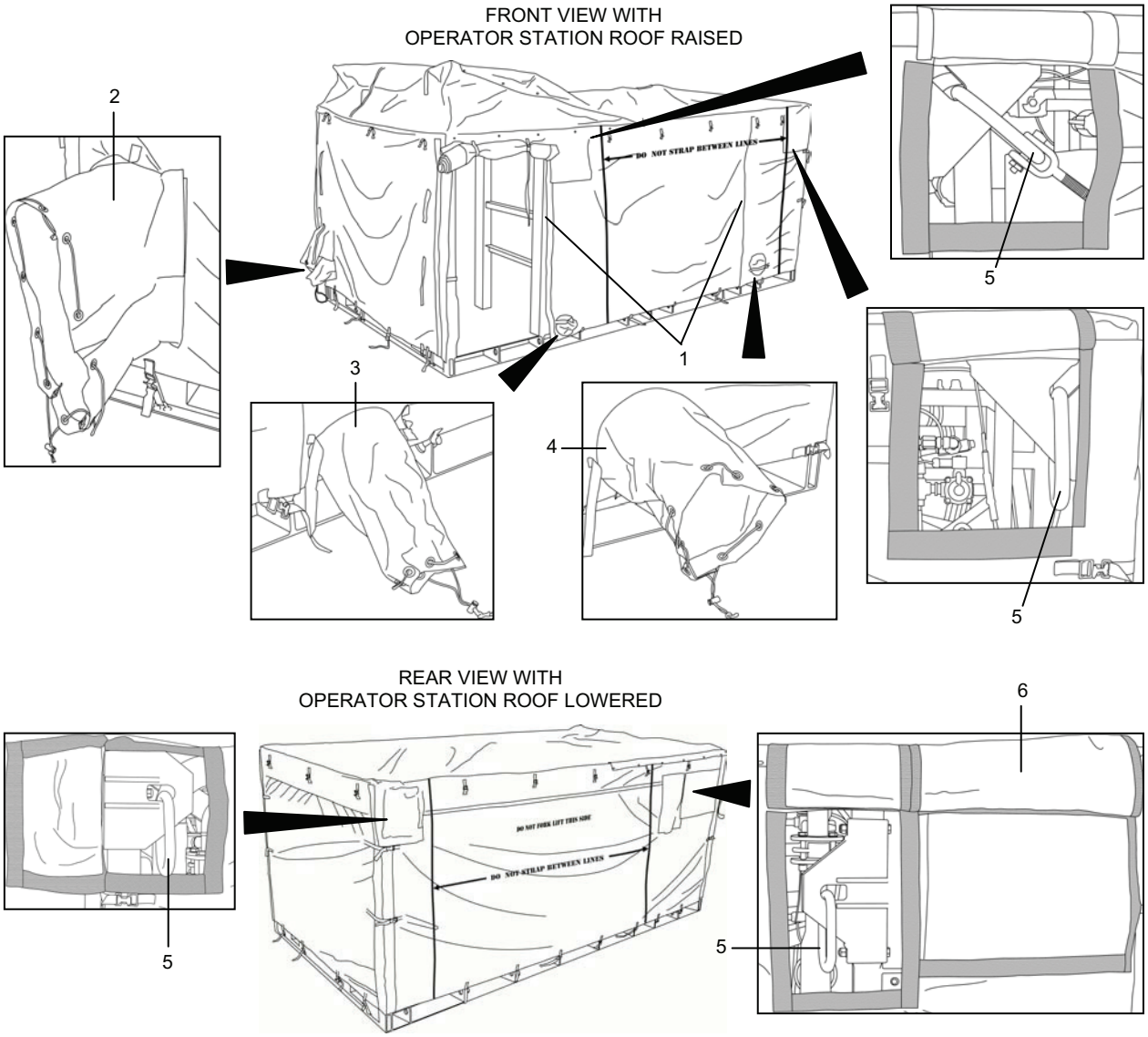

Figure 4. MC-TWPS General Purpose Cover.

Five extended capability modules are available for issue and deployment separately as required by the mission profile. The five extended capability Marine Corps modules are:

- **Cold Weather Module:** deployed for operating environments below 32 ^{0}F.
- **Supplemental Cleaning Waste Storage Module**: used to temporarily store the wastes that result from cleaning the micro-filters (MF) and the reverse osmosis (RO) elements.
- **Ocean Intake Structure System (OISS) Module**: deployed at beach locations that are exposed to wave action and at ocean locations with significant tidal variations.
- **NBC Water Treatment Module:** contains the filter media required for final treatment of a raw water source that is contaminated with nuclear, biological or chemical warfare agents.
- **NBC Survivability Module:** contains a contamination avoidance cover (CAC) to protect the TWPS from NBC agent contamination.

The components of each of the five extended capability modules are identified near the end of this work package.

A-TWPS

The A-TWPS (shown packed out for deployment closed and open in Figure 5) is mounted within an 8 x 8 x 20 ISO load handling shelter that is referred to as the “flat rack”. The A-TWPS includes the basic TWPS skid, all BII, all of the features provided by the five extended capability modules described for the Marine Corps version, a 60 kW Tactical Quiet Generator (TQG) Model 806B, NSN 6115-01-462-0291 and an extended distribution kit. The extended distribution kit makes it possible to increase potable water storage capacity from the standard 6,000 gallons to a total capacity of 15,000 gallons and increase total distribution flow from 125 gpm through two nozzles to 250 gpm through four nozzles. The A-TWPS is compatible with the PLS truck (M1074, M1075), HEMTT LHS truck (M1120), and PLS trailer (M1076) for transport.

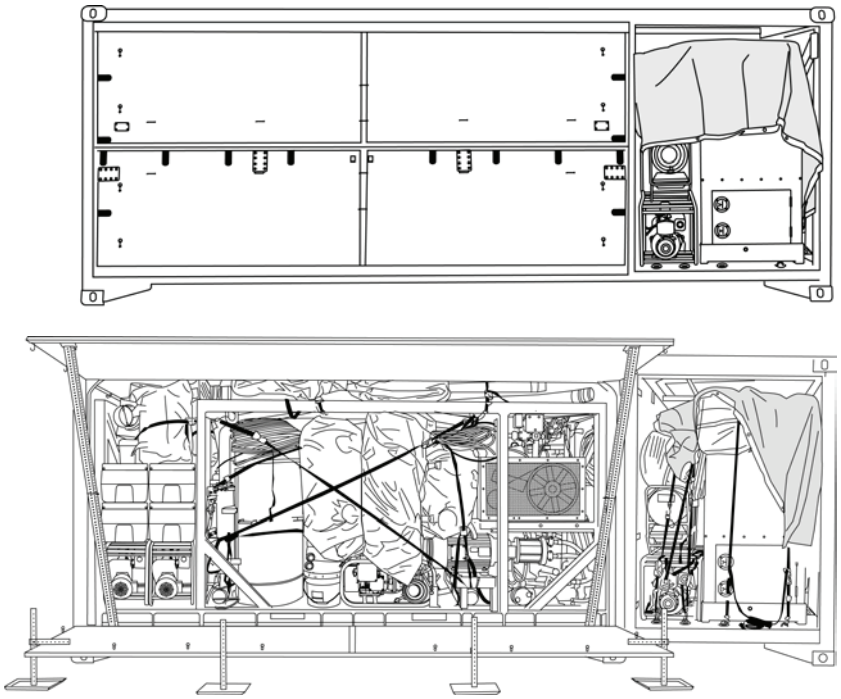

Figure 5. A-TWPS Packed Out for Deployment.

A-TWPS Flat Rack and Fabric Wall

The A-TWPS flat rack (see Figure 6) has two panels in front that are opened during deployment. When opened, the top panel serves as a roof / overhang (1) and the bottom panel serves as a floor (2). Two panels at both ends of the flat rack (3 through 6) and three panels at the back (7 through 9) are removable for access or ventilation. Hinged doors in three of the panels allow easy access for connecting power cables (10) or for operating valves (11, 12). A shipping cover with hook and loop material (13) is secured over the opening below the product water access door (11) to keep the elements out during storage. A return air cover plate (14) in one of the left end panels can be removed when needed during cold weather so that a cold air return duct in the heating system can be hooked up to the panel. Folding steps (15) are incorporated in the back panel closest to the TQG area for access to the top of the flat rack. Two rollers (16) are stored at the TQG end of the flat rack near a bail bar (17). The rollers are installed at the opposite end of the flat rack when loading the flat rack onto an MTVR trailer. The bail bar is used to lift and pull the flat rack onto an MTVR.

The A-TWPS is equipped with a single piece, waterproof, fabric wall (18) that can be installed around the front of the open TWPS to shield the operator and the equipment from the weather. Straps and hook and loop material are used to secure the fabric wall to the opened top and floor panels of the flat rack. A zippered and hook and loop door (19) is provided at the front of the fabric wall for easy access. Sleeves with a Hook and looped seam and a cinch cord are incorporated to provide access for connecting a hot air duct (20) and inlet (21) and discharge (22) hoses to the TWPS.

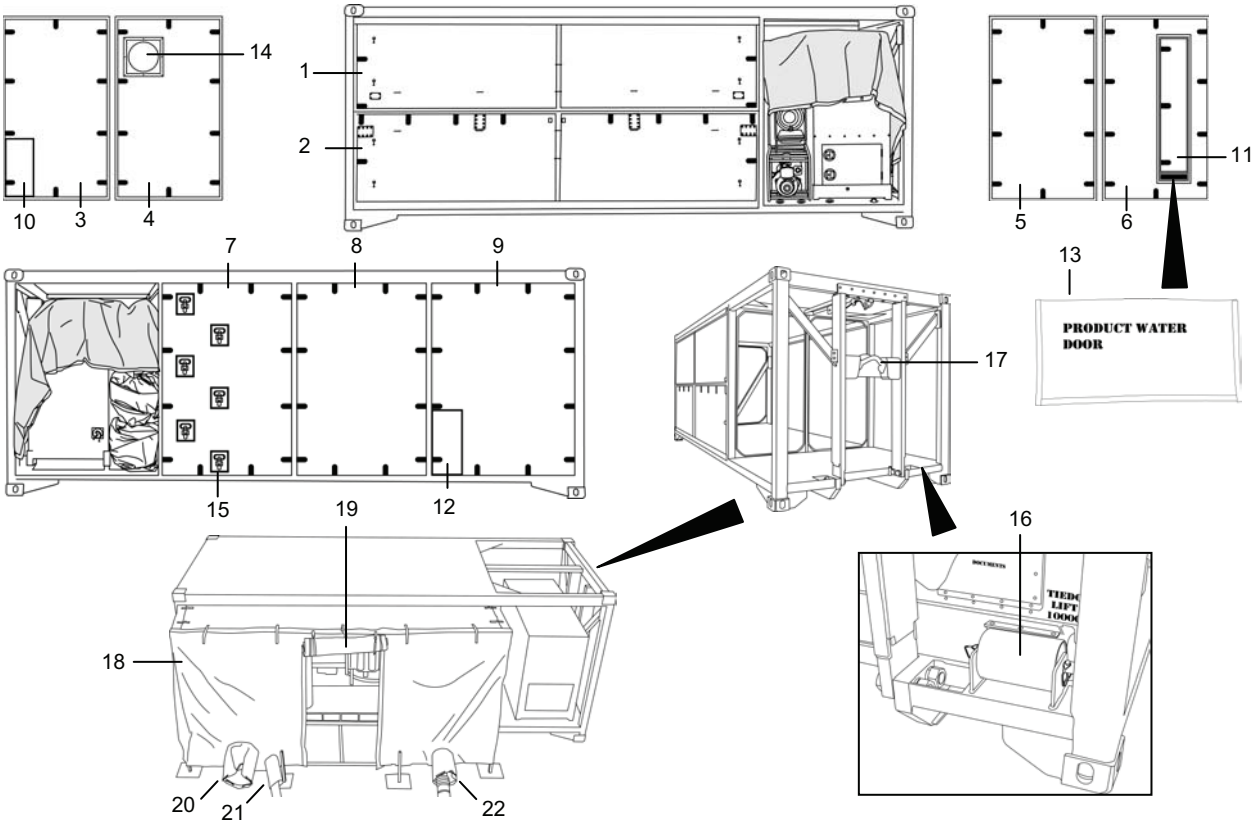

Figure 6. A-TWPS Flat Rack and Fabric Wall.

LOCATION AND DESCRIPTION OF MAJOR COMPONENTS

Both the MC-TWPS and the A-TWPS versions are a fully contained mobile water purification system consisting of the following systems and extended capability kits:

Raw Water Supply System (see Figure 7)

The raw water system draws water from a lake, river, ocean or other raw water source and discharges it into a storage tank called the MF feed tank. The raw water system includes the following major components (listed in the general flow sequence through the system):

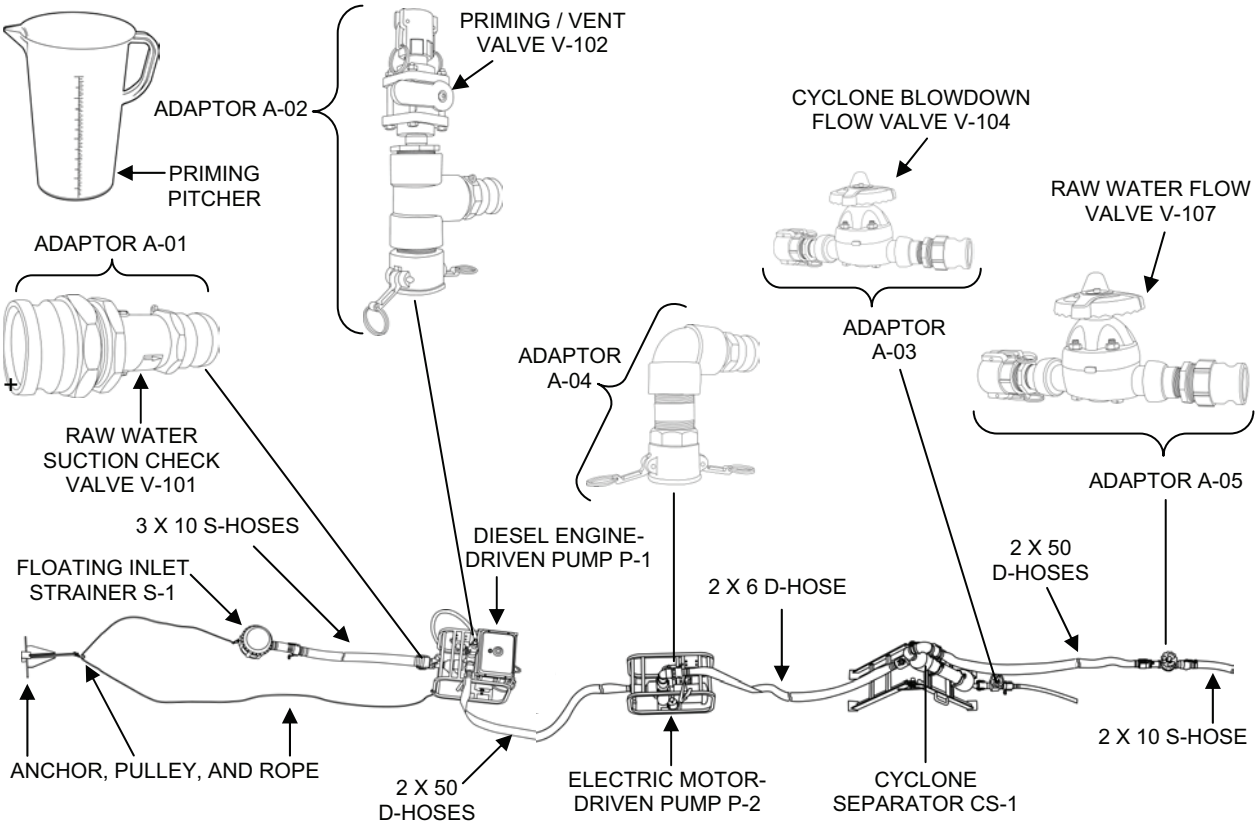

Figure 7. Major Components of the Raw Water Supply System.

- **Floating Inlet Strainer FS-1.** Holds the raw water intake hose off the bottom of the water source and screens out leaves, sticks, fish, and other large objects. It is connected by sections of rigid suction hose to the raw water pump.
- **Anchor, pulley and rope system**. Used to deploy the floating inlet strainer and hold it in place.
- **Thirteen sections of 3-in., 10-ft. long green-banded suction hose**. These are the raw water intake hoses. These hoses deliver raw water from the inlet strainer to the raw water pump. The number of hose sections used depends on site conditions.
- **Diesel Engine Driven Raw Water Pump P-1.** In normal deployment, Raw Water Pump P-1 draws water through the intake strainer and discharges it to the suction side of an Electric Motor-

Driven Raw Water Pump P-2. The Diesel Engine-Driven Pump P-1 is not normally used if the Electric Motor-Driven Pump P-2 has the capacity required to draw water from the source. When the P-1 pump is needed, it is deployed first, between the floating inlet strainer and the P-2 pump. With proper adapters, the Diesel Engine-Driven Pump P-1 may be used in the product water distribution system in place of the distribution pump.

- **Electric Motor-Driven Raw Water Pump P-2.** The length of the P-2 pump power cable limits the deployment of the P-2 pump to within 100 ft. of the TWPS. The Electric Motor-Driven Pump P-2 can be used alone as long as it is within 100 ft. of the skid and not more than 25 ft. in elevation below the TWPS skid. Otherwise, the Electric Motor-Driven P-2 Pump is used together with the Diesel Engine-Driven P-1 Pump. When both the P-1 and P2 pumps are deployed, the P-1 pump is installed closest to the raw water source and between the raw water source and the P-2 pump. With proper adapters, the Electric Motor-Driven Pump P-2 can be used in the product water distribution system in place of the distribution pump.
- **Adaptor A-01.** Connects the 3-in. suction hose to the 2-in. inlet of the first raw water pump. Raw Water Suction Check Valve V-101 is a part of Adaptor A-01. The check valve helps hold the prime of the first raw water pump when the pump is stopped.
- **Adaptor A-02.** Connects the 2-in. outlet of the first pump to a 2-in. discharge hose through the tee section of the adaptor. Priming/Vent Valve V-102 and a priming discharge hose are located at the top of the adaptor.
- **Priming Pitcher.** Used to prime the first raw water pump. The water is poured through Priming/Vent Valve V-102.
- **Adaptor A-04**. Connects the 2-in. discharge of the second raw water pump (if used) to a 2-in. discharge hose. The adaptor provides a 90-degree discharge.
- **Cyclone Separator CS-1.** Used at beach locations when the ocean intake structure system is not deployed (refer to **Ocean Intake Structure System Kit**). Sand and heavy dirt may be picked up through the floating inlet strainer with the raw water at beach locations due to wave action. The cyclone separator uses centrifugal water flow action to remove the sand and heavy dirt from the raw water and discharges the sand with some water through a waste flow drain. Both raw water pumps P-1 and P-2 are deployed when using the cyclone separator. The cyclone separator is installed at the outlet of the second raw water pump P-2.
- **Adaptor A-03**. Connected to the cyclone separator drain. Cyclone Blowdown Flow Valve V-104 on Adaptor A-03 is used to control the flow of the wastewater that carries the sand out of the cyclone.
- **One 2-in., 6-ft. long green-banded discharge hose**. Delivers raw water from the second raw water pump P-2 outlet to the inlet of the cyclone separator.
- **Four 2-in., 50-ft. long green-banded discharge hose sections**. As many of the four hoses are used as needed to deliver raw water from raw water pump P-1 to raw water pump P-2 and from the discharge of the last raw water pump (or the cyclone separator if used) to Adaptor A-05.
- **Adaptor A-05**. Connects the end of the last 2-in., 50-ft. long green-banded discharge hose to a 2-in. x 10-ft suction hose. It includes Raw Water Flow Valve V-107.
- **One 2-in., 10-ft. green-banded section of rigid suction hose.** Discharges raw water from Adaptor A-05 into the top of the MF feed tank (see Figure 8 for MF feed tank).

Micro-Filtration System

The micro-filtration system filters the raw water to remove suspended solids and micro-organisms. At regular intervals the filter portion of the micro-filtration system is automatically backwashed to remove the solids and micro-organisms from the filter and discharge it through a waste out hose back to the raw water source. The micro-filtration system includes the following major components (listed in the general flow sequence through the system):

MF System: MF Feed Tank to TWPS Skid (see Figure 8)

- **MF Feed Tank T-1**. A 1000-gallon collapsible tank to hold a sufficient reserve of raw water to support regular, automatic filter backwash operations.
- **MF Feed Tank Bag Filter S-1**. A cloth mesh filter bag that fits inside the MF feed tank and prevents seaweed, algae and other larger material from being drawn out of the tank with the raw water. Two spare filters are provided in the BII. Water drawn from the MF feed tank is referred to as “MF feed water”.
- **Tripod Assembly**. Supports the 2x10 hose that delivers water to the MF feed tank so that the hose does not push down on and collapse the tank.
- **MF Feed Pump P-3**. An electric motor-driven pump that is used to draw water from the MF feed tank and deliver it to the TWPS skid. The pump is deployed off of the TWPS skid near the MF feed tank.
- **One 3-in., 3-ft. long suction hose**. Connects the MF feed tank to the MF Feed Pump P-3.
- **Two 3-in., 10-ft. long discharge hose**. Connect the MF Feed Pump P-3 discharge to the TWPS skid connection at Basket Strainer S-2 (see Figure 9 for Basket Strainer S-2).

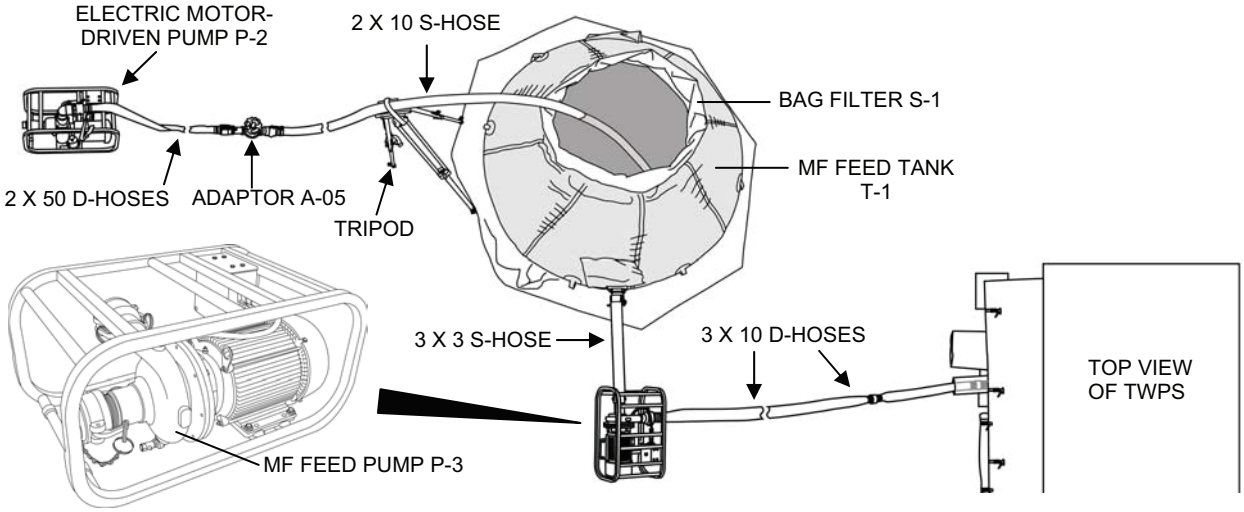

Figure 8. MF System: MF Feed Tank to TWPS Skid.

MF System: Strainer S-2 to MF Modules (see Figure 9)

- **Basket Strainer S-2**. Removes material larger than 600 microns from the MF feed water. The internal basket is removed for cleaning.
- **Drain Valve V-109**. Basket Strainer S-2 drain valve.

- **Vent/Sample Valve V-110**. Used to vent the pipe run above the basket strainer when draining the strainer. Also used as a sample valve for measuring the raw water conductivity.
- **MF Main Feed Valve V-111**. Operates automatically to prevent feed water from flowing back into the MF feed tank when the MF filters are backwashed (during the backwash cycle).
- **Pressure Gauge PI-101**. Measures pressure of the MF feed supplied to the micro-filter (MF) assembly. The pressure indication is for operator reference.
- **Flow Element FE-101 and Flow Transmitter FT-101**. (FT-101 is not shown in Figure 9. It is located in the instrument/solenoid panel box shown in Figure 23). FE-101 and FT-101 measure the MF flow (feed flow to the MF assembly when filtering, backwash flow to the MF assembly during backwash). This flow is displayed at the operator control panel (OCP).
- **Upper Feed Valve V-112 and Lower Feed Valve V-113.** The two valves open and close automatically as required to direct the flow of MF feed water to the MF filter assembly during normal filtering operation and during backwash operations.
- **Pressure Transmitter PT-101.** Measures feed pressure to the Microfiltration Assembly.
- **Micro-Filtration (MF) Assembly.** Consists of 12 parallel filter modules, MF-1 through MF-12, that remove suspended solids and microorganisms from the MF feed water. Each filter module contains a filter element that is composed of a bundle of hollow, porous fibers. MF feed water enters the MF assembly, passes through the porous wall of each fiber, and exits the hollow core of each fiber as filtrate (filtered MF feed water). The suspended solids and microorganisms that accumulate on the fibers are removed from the fibers during regular automatic backwashes.
- **Check Valve V-911.** Allows 15 psig air into the MF Assembly to drain the MF fibers just before backwash and for drain-down. Prevents water from backflowing into the air system.
- **MF Vent Valve V-114.** Vents the MF Assembly during cleaning stages and TWPS shut-down.

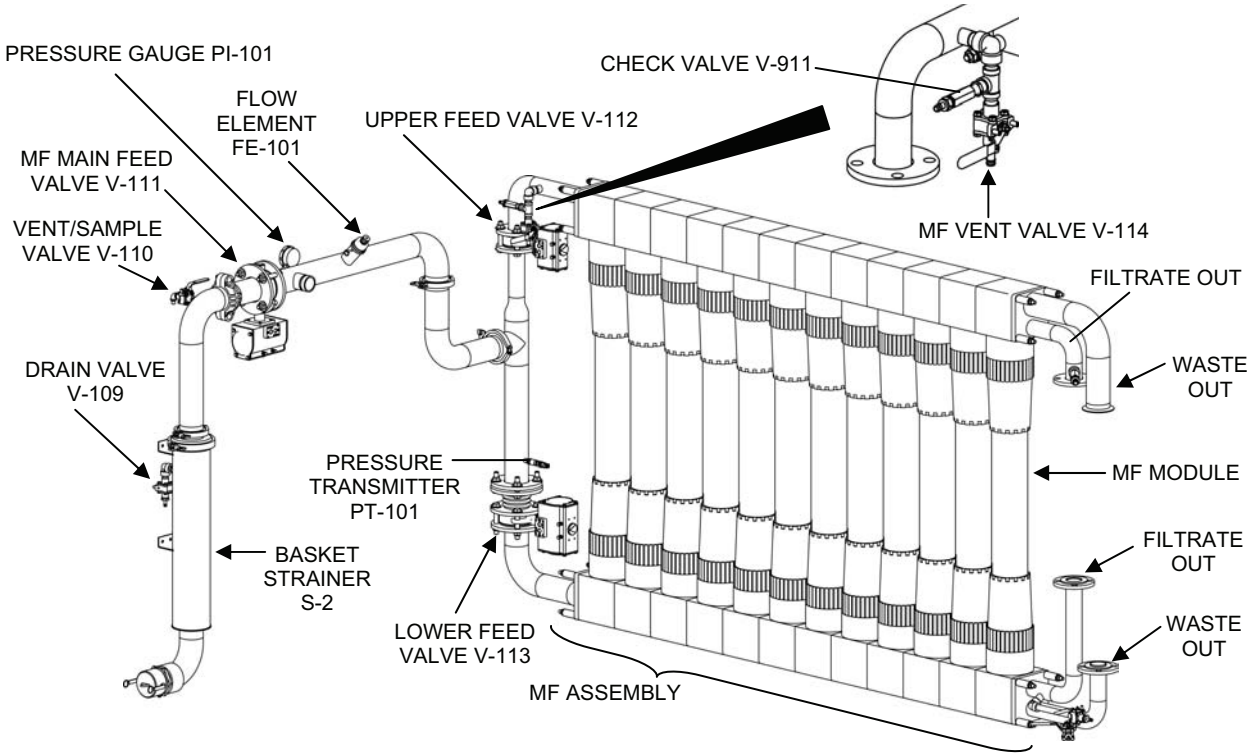

Figure 9. MF System: Strainer S-2 to MF Modules.

MF System: MF Modules to Discharge to RO Feed Tank (see Figure 10)

- **Upper Filtrate Outlet Valve V-201.** V-201 is open during normal filtering operation and is actuated closed or open as required during backwash operations.
- **Filtrate Flow Control Valve V-202.** Controls the filtrate flow to the RO feed tank during normal filtering operation and closes or opens as required during backwash operations.
- **Pressure Transmitter PT-102.** Measures filtrate pressure. The difference between the feed pressure measured by PT-101 (Figure 9) and the filtrate pressure is the trans-membrane pressure (TMP; pressure drop across the membranes, or filter element fibers, of the MF assembly). TMP (pressure drop) is displayed at the operator control panel (OCP) and is an indication of how porous (or how clogged) the fibers are. A high TMP indicates that the MF fibers are becoming clogged with material and need to be cleaned.
- **MF Filtrate Pressure Gauge PI-201.** Measures the filtrate pressure in the line between the micro-filter (MF) assembly and the RO feed tank. The pressure indication is for operator reference. The operator can compare the PI-101 feed pressure gauge reading with the PI-201 filtrate pressure gauge reading as a manual check against the TMP that is measured automatically by Pressure Transmitters PT-101 and PT-102.
- **Check Valve V-912.** Allows 15 psig air into the MF Assembly to drain the MF fibers just before backwash and for drain-down. Allows 100 psig air into the MF Assembly to backwash the MF fibers. Prevents water from backflowing into the air system.
- **MF Filtrate Sample/Drain Valve V-204.** Used to sample filtrate and as a drain.
- **MF Filtrate Drain Valve V-203.** Used to drain the filtrate channels of the MF Assembly.

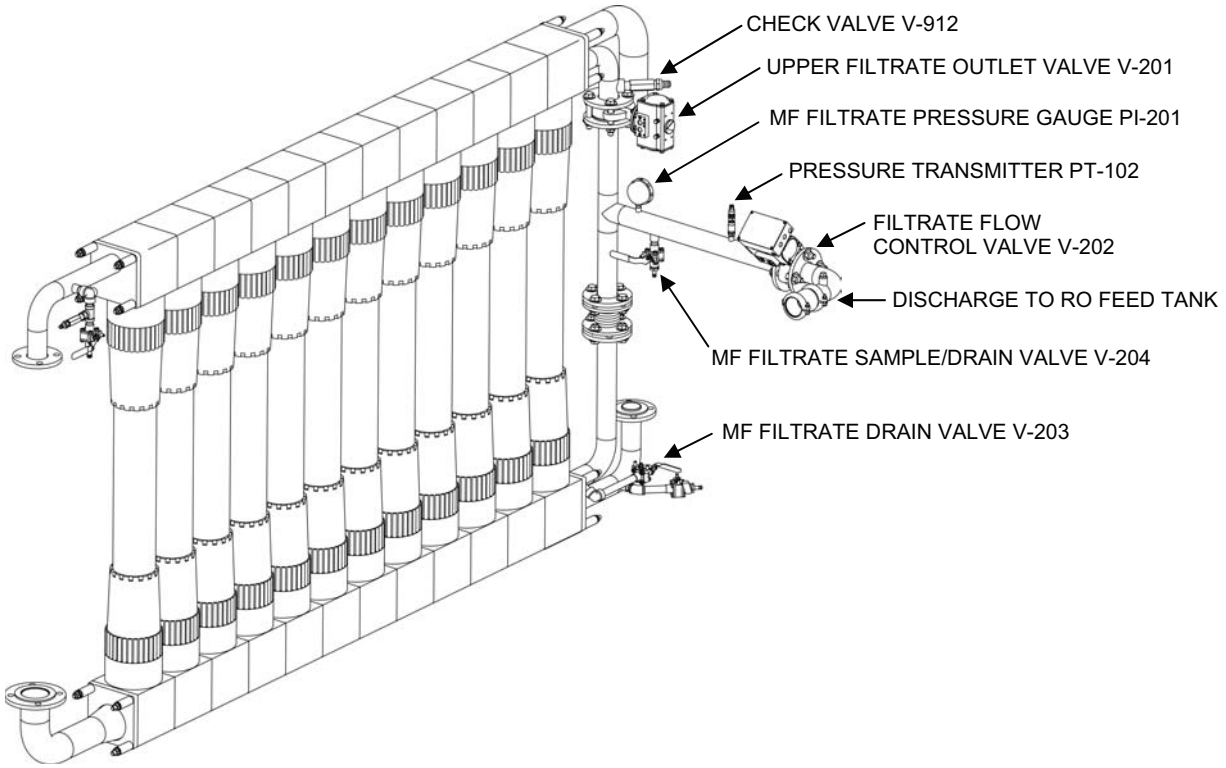

Figure 10. MF System: MF Modules to Discharge to RO Feed Tank.

MF System: MF Modules to Waste Outlet (see Figure 11 and Figure 12)

- **Shell Backwash Upper Outlet Valve V-401.** Opens to discharge the backwash flow from the upper shell of the MF Assembly.
- **Shell Backwash Lower Outlet Valve V-402.** Opens for the air pressure pulse during backwash and when draining the MF.
- **Rupture Disk RD-401.** Rated for 75 psig. The backwash operation creates a sudden and very high velocity surge in the waste out piping and hose. In the event that the waste out hoses are blocked in any manner, the rupture disk will rupture when pressure exceeds 75 psig to release the pressure and protect the TWPS equipment.
- **MF Shell Drain Valve V-403.** Used to drain the shell/waste outlet channels of the MF Assembly.

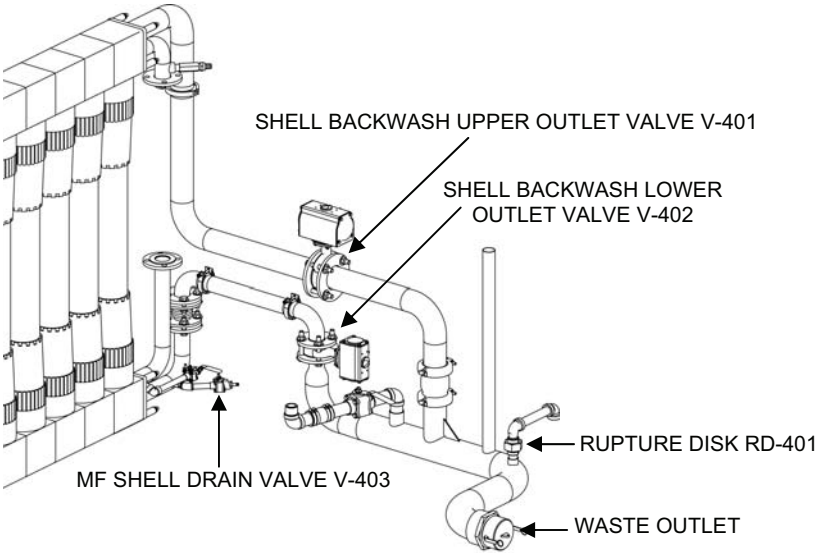

Figure 11. MF System: MF Modules to Waste Outlet.

- **One 4-in., 5-ft. long rigid suction hose**. Connects to the waste outlet on the TWPS skid and discharges the backwash flow and RO reject off the TWPS unit.
- **Adaptor A-09**. Connects the 4-in. diameter waste out suction hose to a 6-in. diameter flexible waste out discharge hose.
- **One 6-in., 50-ft. long discharge hose**. Discharges the backwash flow and RO reject away from the TWPS.

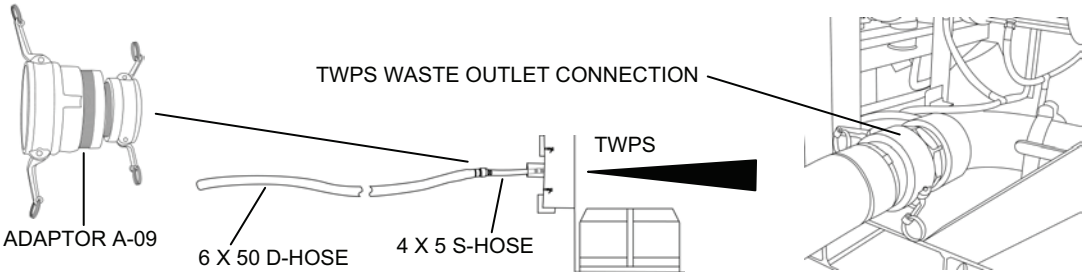

Figure 12. TWPS Waste Discharge.

Reverse Osmosis (RO) System

The MF filtrate becomes the RO feed water. The RO feed water is pressurized in the RO system to flow through the RO elements. A portion of the feed water passes through the RO membranes and is collected as product water that contains only a small amount of dissolved salts (total dissolved solids, TDS). Most of the salts do not pass through the membranes. The remaining water and the salts that do not pass through the RO membranes are called “reject”. The reject water is discharged through the waste out hoses back to the raw water source. The reverse osmosis system includes the following major components (listed in the general flow sequence through the system):

RO System: RO Feed Tank to High Pressure Pumps (see Figure 13)

- **RO Feed Tank T-2**. Stores a sufficient supply of filtrate (for RO feed water) to allow the production of product water to continue uninterrupted during the intervals when the MF modules are being backwashed. Also used for cleaning solutions when cleaning the RO and MF assemblies.
- **Tank Heaters H-1 and H-2**. Submersible heating elements used for heating cleaning solutions and, if needed, to provide added generator load to avoid wet stacking during normal operation. (Wet stacking is the collection of condensation in the generator exhaust system that can occur when operated at low loads. Wet stacking over a period of time can corrode the generator exhaust system.)
- **Temperature Indicator TI-202**. A dial thermometer that indicates the temperature of the fluid inside the RO feed tank. Used primarily for certain cleaning procedures.
- **RO Feed Tank Main Drain Valve V-412 and Auxiliary Drain Valve V-210.** Used to drain the tank.
- **Level Transmitter LT-201**. Provides a level measurement that is used by a PLC to control the level in the RO feed tank.
- **RO Feed Tank Pump Inlet Strainer S-3**. A removable, coarse strainer that is positioned inside the RO feed tank over the tank outlet to the RO feed pump P-4 suction. This strainer prevents coarse objects, which may fall into the tank, from entering the pump.
- **RO Feed Pump P-4.** Draws RO feed water from the RO feed tank and provides the pressure needed by the HP (high pressure) pumps. This pump also circulates the cleaning solutions used when cleaning either of the MF or RO systems.
- **Antiscalant Injection Check Valve V-623.** Injection point for an antiscalant chemical solution that inhibits salt scale formation on the RO membranes.
- **RO Feed Temperature Transmitter TT-201**. Provides a temperature measurement that is used by the PLC to indicate when the feed water temperature exceeds 110° F and to indicate if the RO feed tank heaters are turned off during cleaning.
- **High Pressure Pump Feed Valve V-212.** Used for various cleaning and maintenance procedures.
- **Inline Strainer S-4 and Drain Valve V-213.** Protects the HP pumps. Catches sand and dirt that may have entered the RO feed tank before it reached the HP pumps.
- **RO Feed Pressure Gauge PI-202**. Indicates the pressure from the RO feed pump. Usual pressure is 40 to 45 psig.
- **RO Feed Pressure Transmitter PT-201.** Provides a pressure measurement that is used by the PLC to shut down the HP pumps when the pressure from the RO feed pump drops below 35 psig.
- **High Pressure Pump (HPP) Inlet Drain Valve V-214.** Used to drain water from the HPP inlet pipes and hoses.

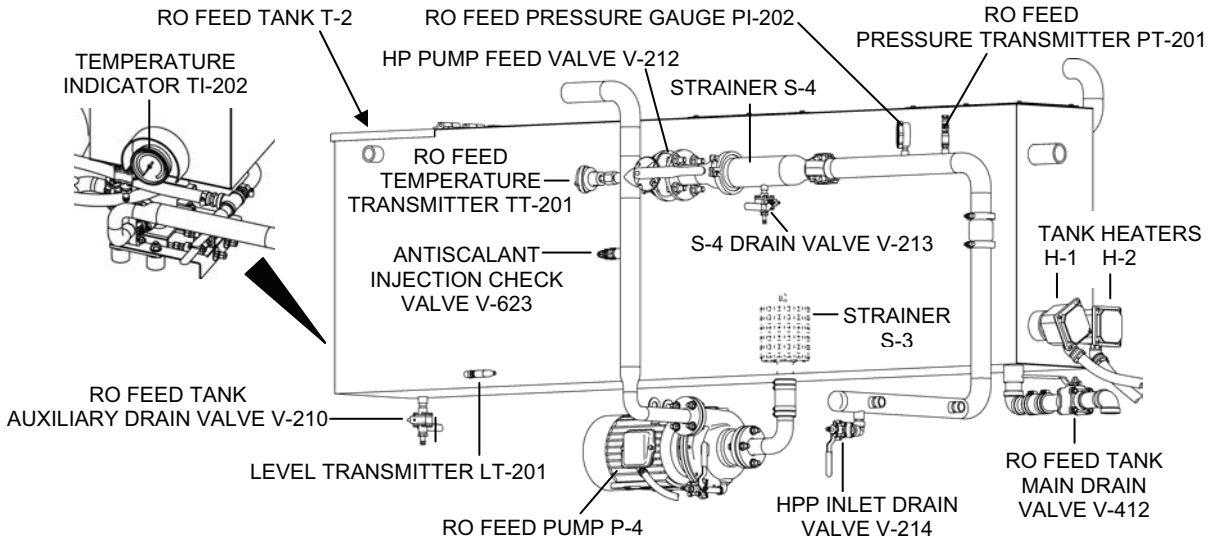

Figure 13. RO System: RO Feed Pump to High Pressure Pumps.

RO System: High Pressure Pumps (see Figure 14)

- **High Pressure (HP) Pumps P-5 and P-6**. The reverse osmosis process is pressure driven. Water only moves through the RO membrane pores if it is under pressure. Higher feed water salt content requires higher pressure to force water through the RO membrane pores and produce water than feed water with lower salt content. The high pressure pumps provide the operating pressure required by the RO elements to produce the desired product water flow.
- **HPP Lubricant Return Lines.** A portion of the feed water that is delivered to the pumps is used to lubricate the pumps and is discharged at low pressure back to the RO feed tank.
- **HPP Case Drain Valve V-215.** Used to drain the high pressure pumps.

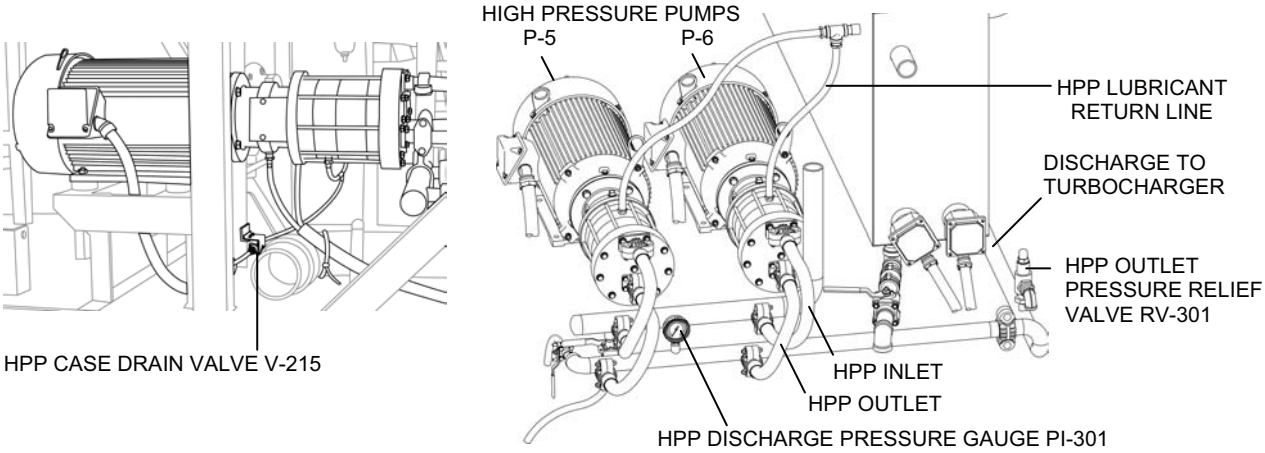

Figure 14. RO System: High Pressure Pumps.

RO System: High Pressure Pumps to RO Vessels (see Figure 15)

- **HPP Outlet Drain Valve V-301.** Used to drain the HPP outlet hoses and pipe.
- **HPP Discharge Pressure Gauge PI-301.** Indicates the HP pump discharge pressure.
- **HPP Outlet Pressure Relief Valve RV-301**. Rated to withstand up to 1050 psig. Protects the HP pumps from over pressure in excess of 1050 psig.
- **HPP Outlet Drain Valve V-302.** Used to drain high pressure pump outlet hoses and piping.
- **Pressure Recovery Turbocharger PRT-1**. Uses pressure energy from the reject water coming out of the RO vessels to boost the pressure of the RO feed water going into the RO vessels.
- **Turbocharger Feed Drain Valve V-303.** Used to drain the feed water from the turbocharger.
- **Turbocharger Reject Drain Valve V-410.** Used to drain the reject water from the turbocharger.
- **Feed Piping Drain Valve V-304.** Used to drain the feed piping going to RO Vessel #1 and other pipes that are part of the chemical cleaning system.
- **RO Feed Pressure Transmitter PT-302.** Provides a measurement of the pressure to the RO vessels that is displayed at the operator control panel (OCP). If the pressure exceeds 1225 psig, a high-pressure alarm sounds.
- **RO Feed Pressure Gauge PI-304.** Provides a direct reading of the RO feed pressure.
- **RO Feed Pressure Relief Valve RV-302**. Rated to withstand up to 1250 psig. Protects the RO vessels from over pressure in excess of 1250 psig.
- **Air Purge Valve V-913.** After an air hose is connected from the air system to Air Purge Valve V-913, the purge valve is opened so that air can be used to purge water or cleaning solution from the RO system.
- **RO Vessels ROV-1 through ROV-5.** Each vessel contains two RO filter membrane elements. Feed water flows through each of the vessels in series. A portion of the feed water passes through the RO membrane within each element. The RO membranes reject most of the salt producing potable product water. Product water exits the RO element at both ends of the each vessel and flows to a header. The feed water that does not pass through the membranes is concentrated with salt and is discharged from the last vessel as reject water.

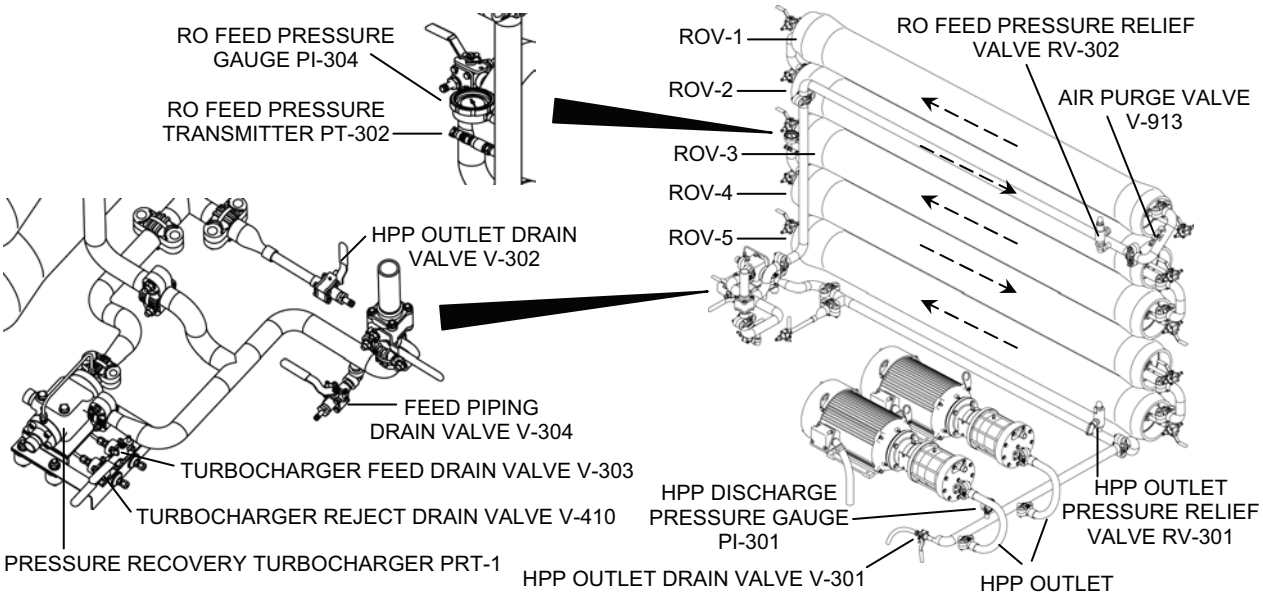

Figure 15. RO System: High Pressure Pumps to RO Vessels.

RO System: RO Vessels to Waste Out (see Figure 16)

- **RO Vessel Drain Valve V-408.** Used to drain water out of the RO vessels.
- **RO Reject Pressure Gage PI-401.** This pressure gage is located in the reject line between pressure control valve HCV-401 and the turbocharger. The gage indicates the reject pressure in the line from the RO vessel ROV-5 reject outlet to the turbocharger.
- **Main Pressure Control Valve HCV-401 and Auxiliary Pressure Control Valve HCV-401A.** Enables the operator to control the pressure boost that the turbocharger delivers to the RO feed by adjusting how much of the reject flow from the RO vessels is bypassed around the turbocharger directly to waste.
- **Reject Check Valve V-411.** Prevents waste water from backing up into the RO system especially during backwash surges.
- **RO Reject Flow Element FE-401 and Flow Transmitter FT-401.** (FT-401 is not shown in Figure 16. It is located in the instrument/solenoid panel box shown in Figure 23). FE-401 and FT-401 measure the reject flow. Reject flow is displayed at the operator control panel (OCP).

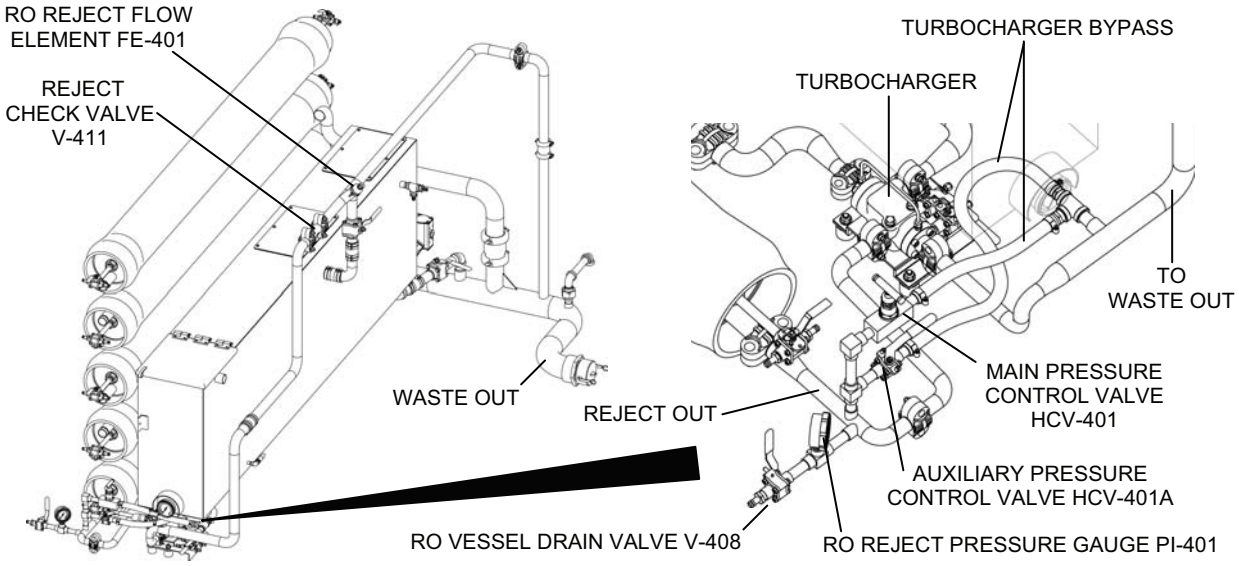

Figure 16. RO System: RO Vessels to Waste Out.

RO System: RO Vessels to Product Out (see Figure 17)

- **RO Product Flow Three-Way Valves V-501 through V-510.** One three-way valve at the product water out port of each of the ten RO elements. The valve can be positioned to direct product water flow from the element to the product manifold, to a sample/drain port that is used for flow rate and conductivity measurements, or to drain.
- **Low Range Conductivity Element CE-501A and High Range Conductivity Element CE-501B**. Measure product water conductivity and are connected to Conductivity Indicating Transmitter (Analyzer) CIT-501.
- **Conductivity Indicating Transmitter (Analyzer) CIT-501**. (CIT-501 is not shown in Figure 16. It is located in the instrument/solenoid panel box shown in Figure 23). Using inputs from CE-501A and CE-501B, provides an output to the PLC, which displays the measurement on the OCP as mg/l total dissolve solids (TDS). TDS is an indication of how much salt is in the product water. A high alarm indicates when the TDS is greater than 1000 mg/L or when the PLC calculates that the RO membrane salt rejection has become too low.
- **Product Pressure Gauge PI-501**. Indicates the product water discharge pressure.
- **Product Relief Valve RV-501.** Rated for 20 psig. In the event that the product water lines or hoses are blocked in any manner, the relief valve will release pressure from the line when it exceeds 20 psig to protect the RO vessels and elements.
- **Product Vacuum Breaker VB-501.** Prevents chlorinated water from being siphoned from the product water distribution system back into the RO vessels when the TWPS is not in operation. Chlorinated water will damage the RO membranes.
- **Product Utility Valve V-511 and Hose.** Used to deliver product water to the RO feed tank for certain chemical cleaning procedures. Also a product water source for general use.
- **Product Flow Element FE-501 and Product Flow Transmitter FT-501.** (FT-501 is not shown in Figure 16. It is located in the instrument/solenoid panel box shown in Figure 23). FE-501 and FT-501 measure product flow. The flow is displayed at the OCP.
- **Product Water Check Valve V-512**. Prevents chlorinated product water from flowing back into the RO vessels when the TWPS is not in operation. Chlorinated water will damage the RO membranes.
- **Hypochlorite Injection Check Valve V-633.** Injection point for a hypochlorite chemical solution into the product water to prevent microbial growth and contamination.

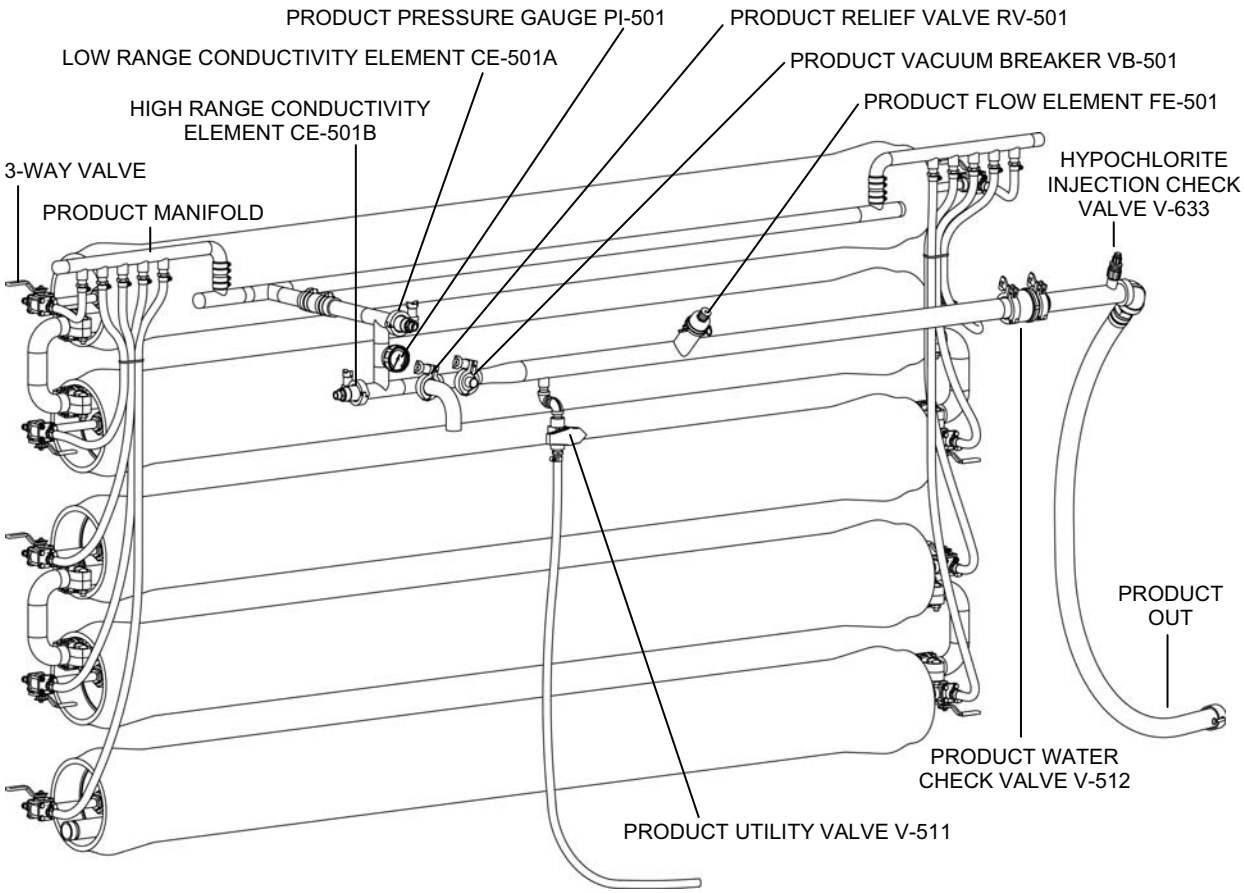

Figure 17. RO System: RO Vessels to Product Out.

Air System

The air system provides pressurized air to operate automatic valves and to blow filtered material loose from the micro-filter elements during backwash. The air system includes the following major components (listed in the general flow sequence through the system):

Air System: Air Compressor Assembly and Two-Stage Air Filtration System (see Figure 18)

- **Air Compressor AC-1**. A 3-stage air compressor that discharges air at approximately 5 cubic ft. per minute and 1800 psig. The compressor is operated by a five horse-power electric motor.
- **Temperature Switch TSH-901**. Shuts down the compressor if the compressor third-stage temperature is too high.
- **Automatic Drain Valve XV-910.** Opens automatically at 15-minute intervals to blow water from the intermediate filter.
- **Coalescer CO-1.** Located at the discharge of the compressor, CO-1 removes most of the water and oil that may be contained within the air.
- **Drain Shutoff Valve V-901.** Manual valve for shutting off the coalescer automatic drain if solenoid malfunctions.
- **Drain Shutoff Valve V-902.** Manual valve for shutting off the coalescer automatic drain if solenoid malfunctions.
- **Automatic Drain Valve XV-911**. Opens automatically at 15-minute intervals to blow water and oil from the coalescer.
- **High-Pressure Air Relief Valve RV-901.** Releases air when the air pressure exceeds 2200 psig to protect the compressor and other high-pressure air system components.
- **Check Valve V-903**. Prevents filtered air from flowing back toward the compressor when the compressor has cycled off.
- **Air Purification Filter AF-2.** Removes any water and oil remaining in the air.
- **High-Pressure Air Vent Valve V-904**. Used to vent high-pressure air before servicing the air compressor or the two-stage air filtration system (CO-1 and AF-2).

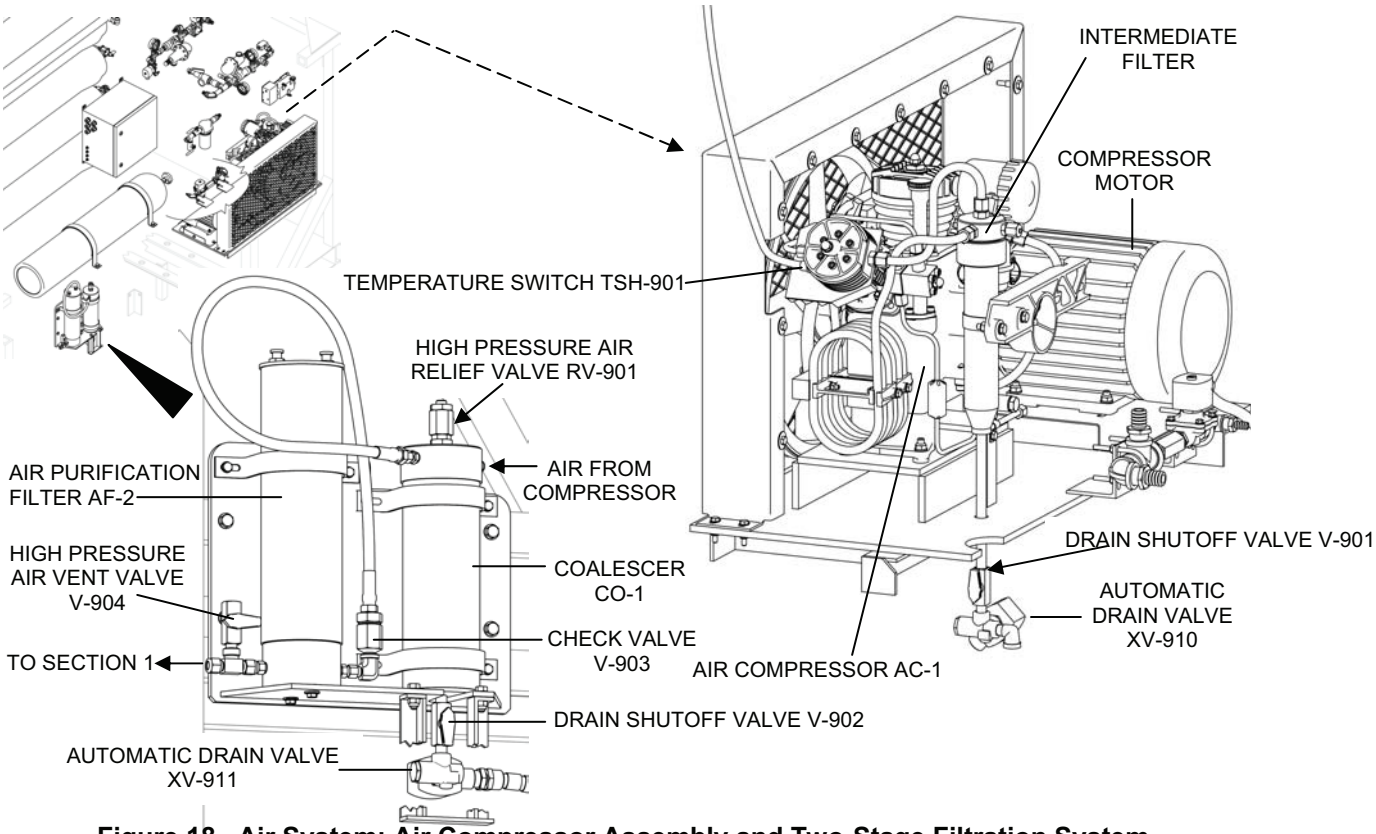

Figure 18. Air System: Air Compressor Assembly and Two-Stage Filtration System.

Air System: Section 1, Air Receiver Tank R-1, and Pressure Switch PSL/PSH-901 (see Figure 19)

- **Pressure Maintaining Valve V-905.** Maintains approximately 1800 psig in the system between the compressor and itself to ensure proper loading of the compressor cylinder valves.
- **Check Valve V-906.** Maintains pressure to the input side of Pressure Regulating Valve PRV-901.
- **Air Receiver Tank R-1.** Provides a supply of clean, dry, compressed air as needed to operate automatic valves and to blow filtered material loose from the micro-filter elements during backwash.
- **Pressure Switch Assembly PSL/PSH-901.** Turns the compressor on when the air tank pressure drops below 800 psig and off when the air tank pressure exceeds 950 psig.
- **Pressure Gauge PI-901.** Indicates the air receiver tank pressure.
- **Pressure Regulating Valve PRV-901.** Reduces the high pressure air from the air receiver tank / compressor to 100 psig.
- **Pressure Gauge PI-902.** Indicates the pressure as regulated by PRV-901.
- **Relief Valve RV-902.** Rated at 125 psig. In the event that regulator PRV-901 fails to function properly, the relief valve will release air when the air pressure exceeds 125 psig to protect the air system components downstream.

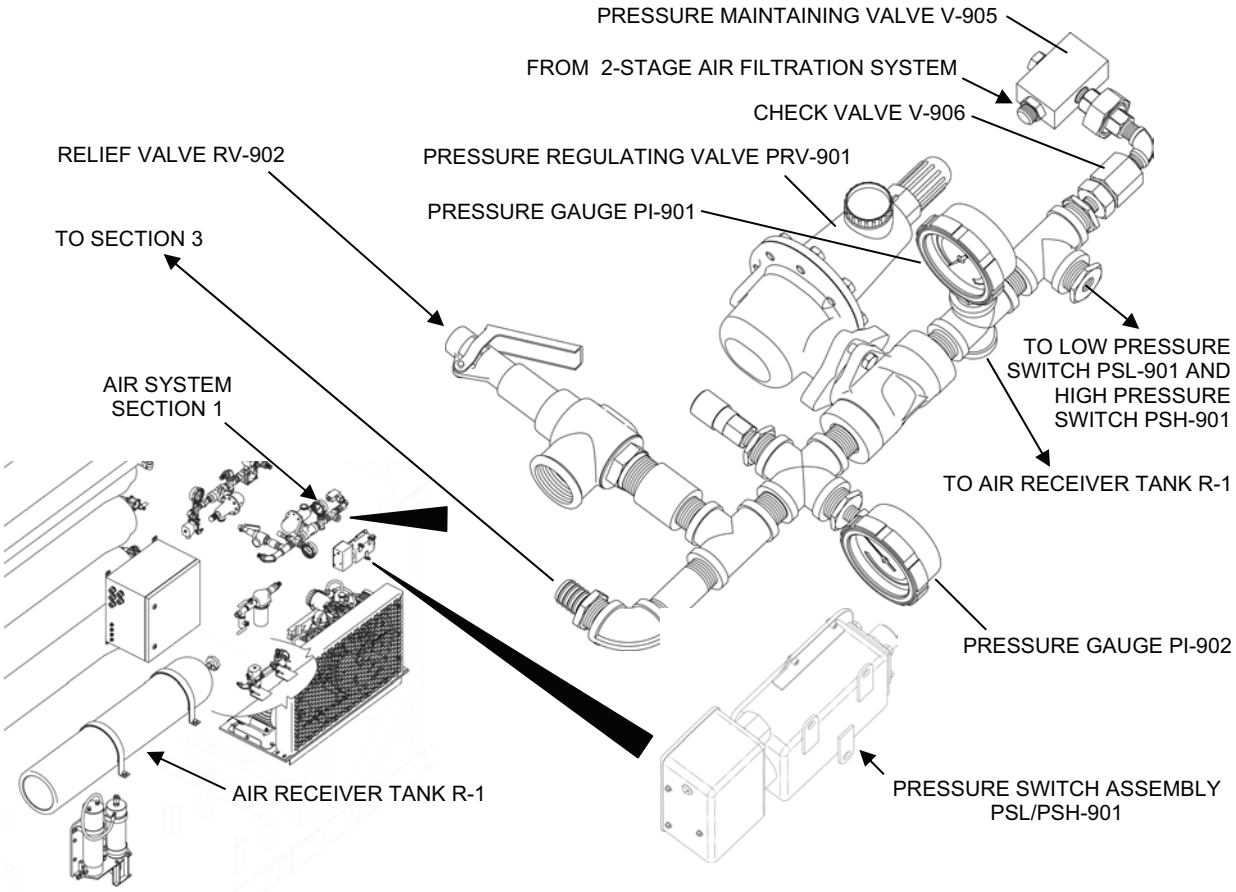

Figure 19. Air System: Section 1, Air Receiver Tank R-1, and Pressure Switch PSL/PSH-901.

Air System: Section 3 (see Figure 20)

- **Solenoid Valve XV-901.** Opens to provide 100 psig air to the upper filtrate outlet of the MF Assembly for MF backwash.
- **Pressure Regulating Valve PRV-902.** Reduces 100 psig air to 15 psig.
- **Low Pressure Air Vent Valve V-915.** Opened to vent air when it is necessary to adjust pressure PRV-902 to provide a 15 psig reading at PI-903.
- **Pressure Gauge PI-903.** Indicates the pressure as regulated by PRV-902.
- **Solenoid Valve XV-903.** Opens to provide 15 psig air to the feed inlet of the MF Assembly to drain the MF assembly shell during drain-down procedures.

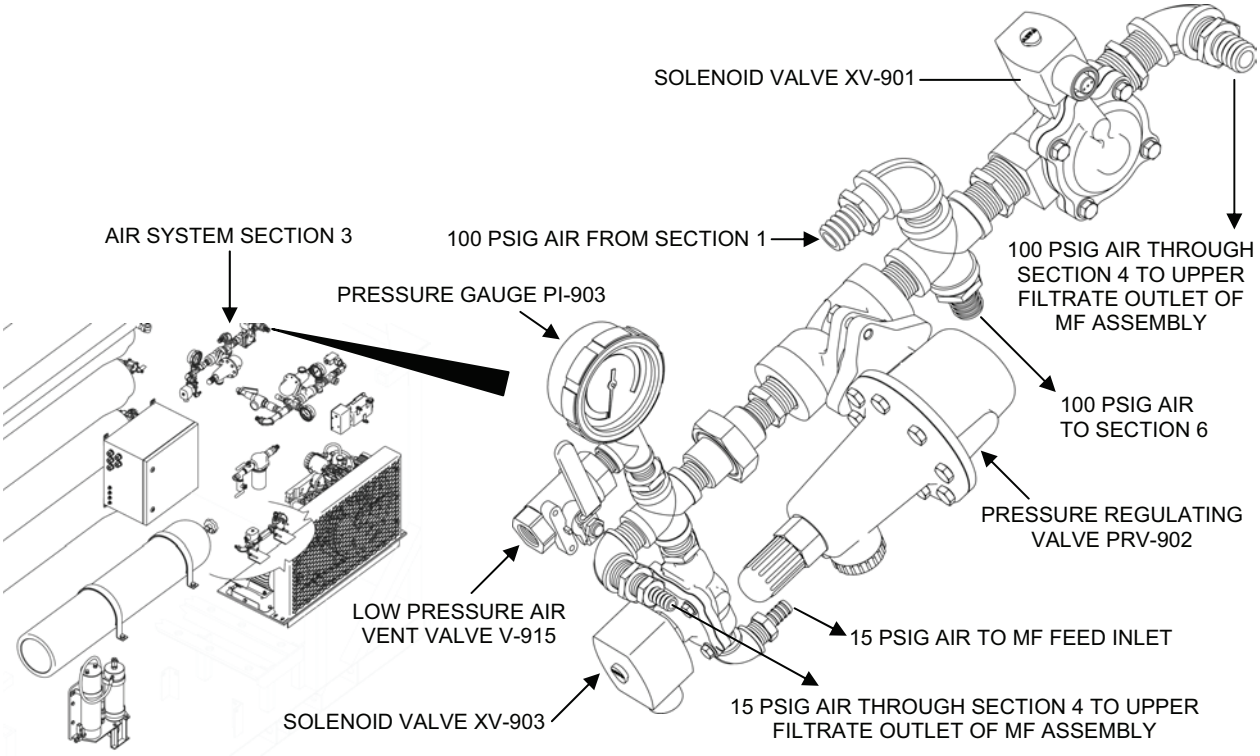

Figure 20. Air System: Section 3.

Air System: Section 4 (see Figure 21)

- **Solenoid Valve XV-902.** Opens to provide 15 psig air from Air System Section 3 to the upper filtrate outlet of the MF Assembly to drain the MF fibers before backwash.
- **Check Valve V-908.** Prevents 100 psig air from entering the MF through the 15 psig air system and Air System Section 3.

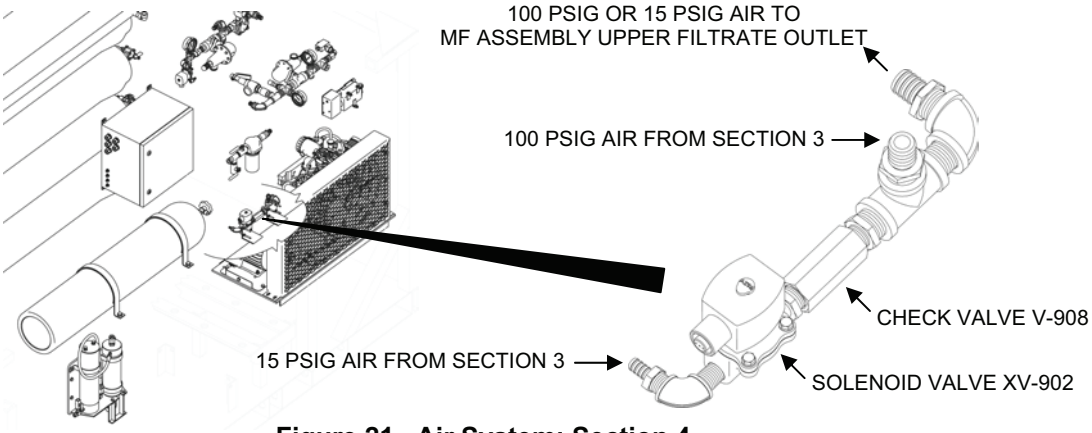

Figure 21. Air System: Section 4.

Air System: Section 6 (see Figure 22)

- **Coalescer CO-2.** Removes any remaining moisture from the 100 psig air that is coming directly through Air System Section 3 from Air System Section 1. Air leaving CO-2 goes to the Feed Flow Control Panel, Filtrate Flow Control Valve V-202, and the Air Manifold Assembly in the Instrument/Solenoid Panel Box.
- **Low Pressure Air Shutoff Valve V-909.** Used to shut off 100 psig air so maintenance can be performed on the Feed Flow Control Panel, Filtrate Flow Control Valve V-202, or the Air Manifold Assembly.
- **Low Pressure Air Vent Valve V-910.** Opened as needed to bleed the air from the entire air system.

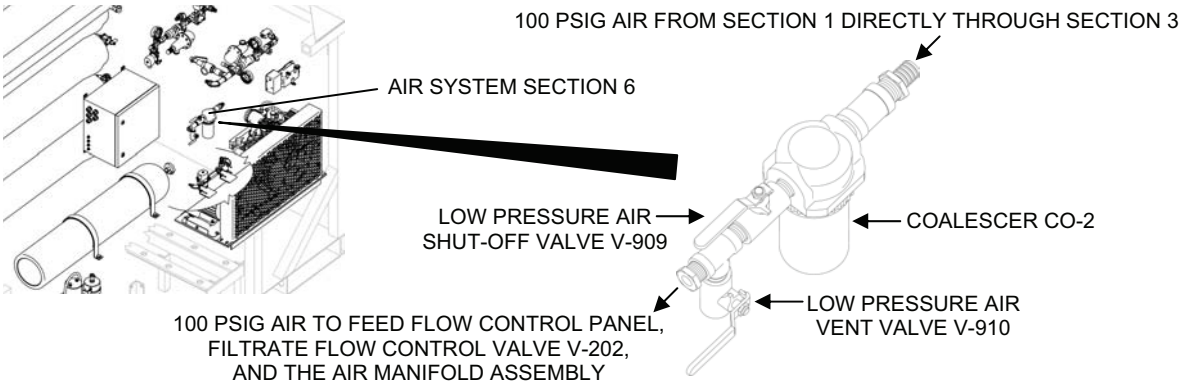

Figure 22. Air System: Section 6.

Air System: Instrument/Solenoid Panel Box (see Figure 23)

The Instrument/Solenoid Panel Box houses three flow transmitters, one conductivity transmitter, and the air manifold assembly. The transmitters are not part of the air system, but perform functions in the MF and RO system as follows:

- **MF Feed Flow Transmitter FT-101**. Works with Flow Element FE-101 in the MF System to measure the MF flow (feed flow to the MF assembly when filtering, backwash flow to the MF assembly during backwash). This flow is displayed at the operator control panel (OCP).
- **RO Reject Flow Transmitter FT-401.** Works with Flow Element FE-401 in the RO System to measure the reject flow from the RO vessels. Reject flow is displayed at the operator control panel (OCP).
- **Conductivity Indicating Transmitter (Analyzer) CIT-501**. Uses inputs from Conductivity Elements CE-501A and CE-501B in the RO System and provides an output to the PLC to determine total dissolved solids (TDS) in the product water. Product TDS is displayed at the OCP.
- **Conductivity Transmitter ON/OFF switch**. Used to turn the conductivity transmitter on and off.
- **Product Flow Transmitter FT-501.** Works with Flow Element FE-501 in the RO System to measure product flow. The flow is displayed at the OCP.

The Air Manifold Assembly is housed behind the transmitters. It is comprised of six solenoid valves that are activated by the PLC to operate automatic valves in the TWPS. The solenoid valves and the automatic valves that they control are as follows:

- **Solenoid Valve XV-904.** Controls 100 psig air to MF Main Feed Valve V-111.
- **Solenoid Valve XV-905.** Controls 100 psig air to MF Upper Feed Inlet Valve V-112.
- **Solenoid Valve XV-906.** Controls 100 psig air to MF Lower Feed Inlet Valve V-113.
- **Solenoid Valve XV-907.** Controls 100 psig air to MF Upper Shell Outlet Valve V-401.
- **Solenoid Valve XV-908.** Controls 100 psig air to MF Lower Shell Outlet Valve V-402.
- **Solenoid Valve XV-909.** Controls 100 psig air to MF Upper Filtrate Outlet Valve V-201.

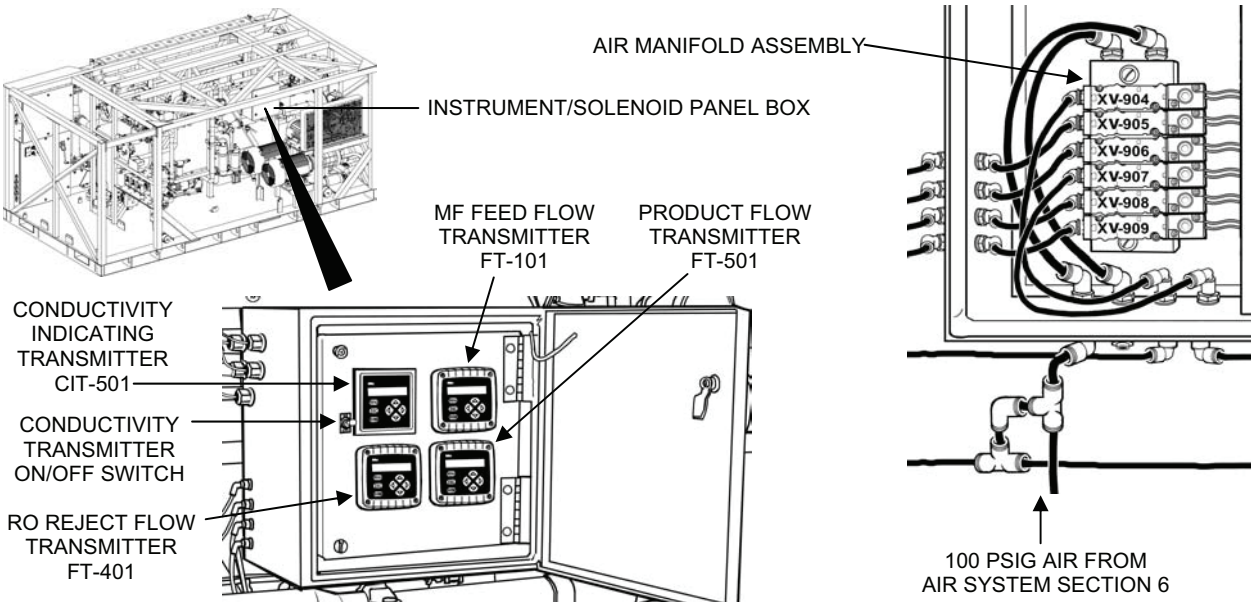

Figure 23. Air System: Instrument/Solenoid Panel Box.

Chemical Injection System

The chemical injection system is composed of three independent chemical systems: the sodium bisulfite, antiscalant, and calcium hypochlorite chemical injection systems.

The **sodium bisulfite chemical injection system** is used only if the raw water source is chlorinated water. Chlorinated water will rapidly destroy the fibers in the micro-filter elements and the membranes in the reverse osmosis elements. Sodium bisulfite is injected into chlorinated raw water before the water is discharged into the MF Feed Tank to neutralize the chlorine.

The **antiscalant chemical injection system** inhibits salt scale formation on the RO membranes.

The **calcium hypochlorite chemical injection system** prevents microbial growth in the product water.

Each of the three chemical systems consists of the following components (see Figure 24):

- Chemical Injection Pump CP-1, CP-2, or CP-3
- Four Function Valve V-612, V-622, or V-632
- Refillable five gallon bucket to hold the chemical solution
- Foot Valve (V-611, V-621, or V-631), strainer, and ceramic weight
- 3/8 in. suction tubing
- 3/8 in. discharge tubing
- 1/4 in. return/priming tubing.
- Injection Check Valve V-613, V-623, or V-633 (see Figure 25)

An eye wash station is located in the operator station just above the chemical pumps (see Figure 24).

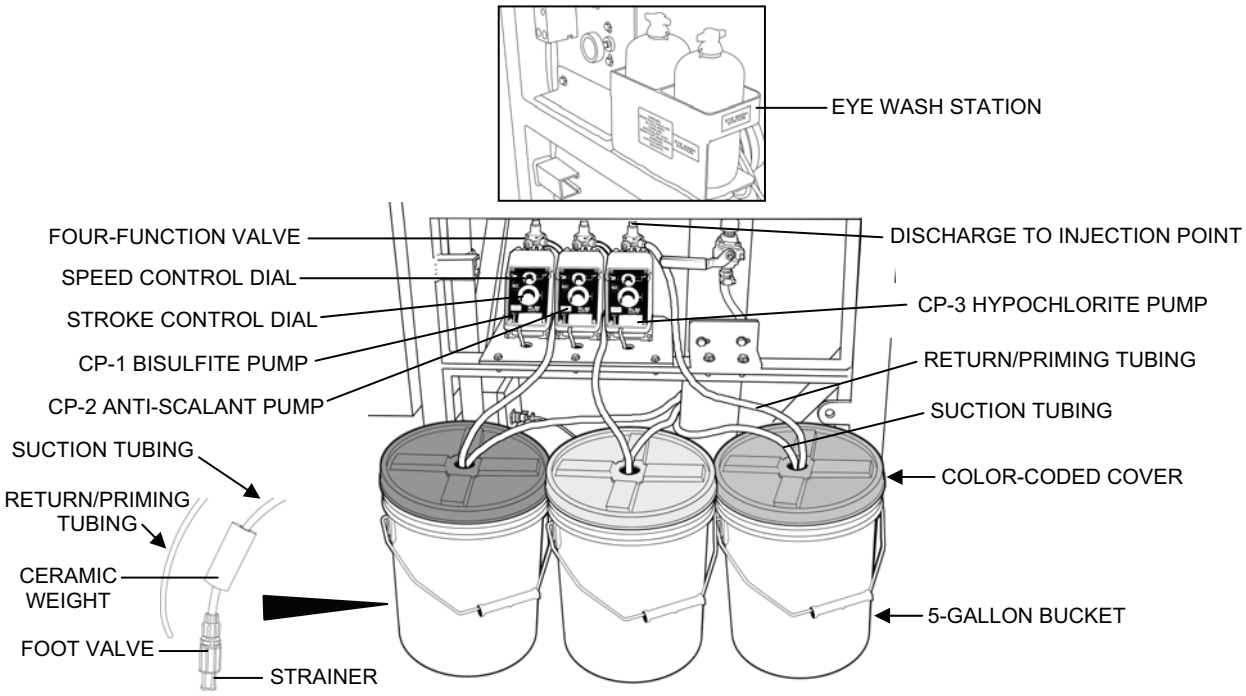

Figure 24. Chemical Injection System Components.

The chemical bucket covers are color-coded to match labels on the buckets as follows:

- Sodium bisulfite chemical bucket cover **BLUE**
- Antiscalant chemical bucket cover **YELLOW**
- Calcium hypochlorite chemical bucket cover **RED**

The injection points for the chemicals are as follows:

- Sodium bisulfite is injected through Adaptor A-11 in the raw water line to the MF feed tank (see Figure 25).

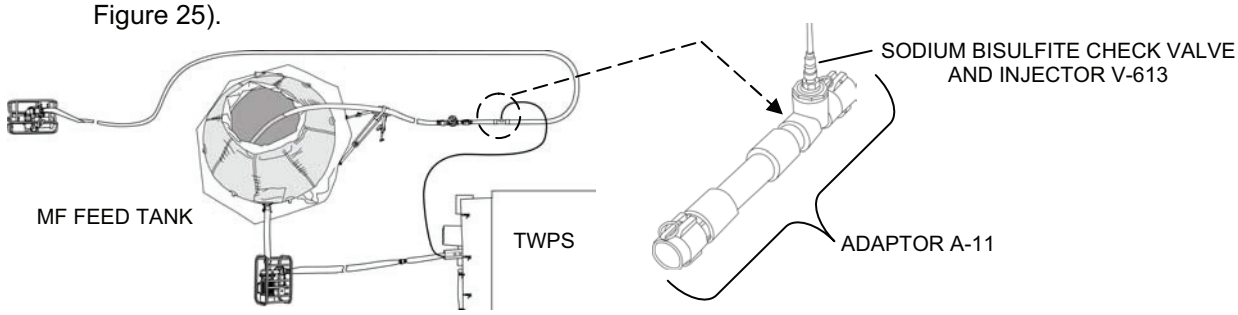

Figure 25. Sodium Bisulfite Chemical Injection Point.

- Antiscalant is injected in the RO feed pump discharge line to mix with the feed water as it is pumped to the high-pressure pumps and on to the RO vessels (see Figure 26).

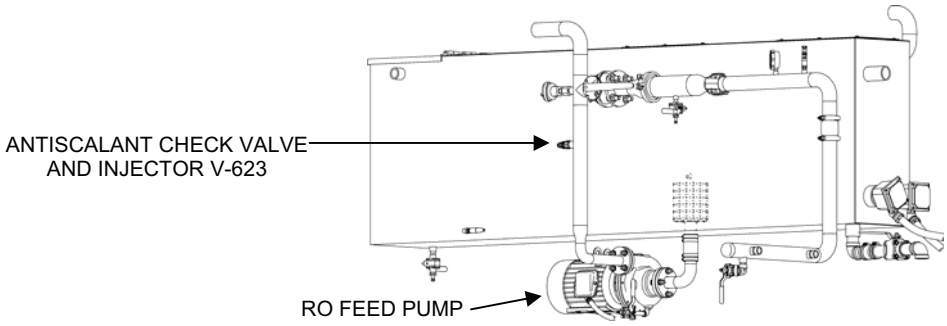

Figure 26. Antiscalant Chemical Injection Point.

- Calcium hypochlorite is injected in the product water discharge line (see Figure 27).

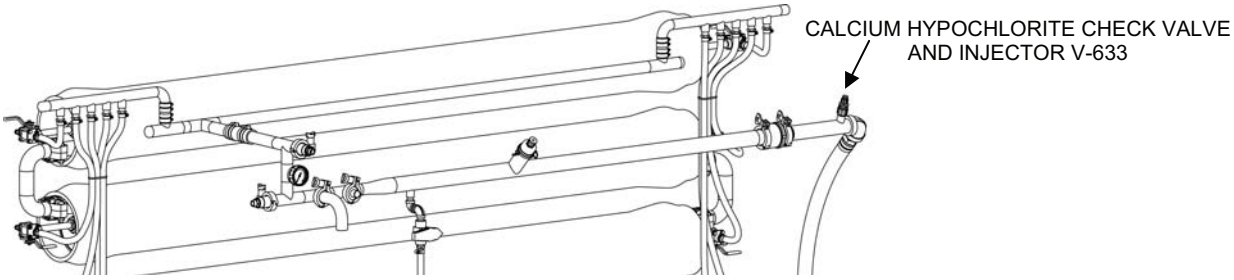

Figure 27. Calcium Hypochlorite Chemical Injection Point.

Standard Product Water Distribution System (MC-TWPS and A-TWPS) (see Figure 28)

The standard product water distribution system stores the potable product water produced by the TWPS in two 3000-gallon storage tanks and provides up to 125 gpm total distribution capacity through two distribution nozzles. The standard product water distribution system includes the following major components (listed in the general flow sequence through the system):

- **Four 1½ in. x 10-ft. blue-banded suction hoses.** Discharge the product water from the TWPS to the one of the distribution tanks (or to the NBC system if used.)
- **Adaptor A-15.** Connects the product water hose to the inlet of one of the product water distribution storage tanks. Adaptor A-15 includes a shut-off valve.
- **Two 3000-gallon collapsible storage tanks T-3 and T-4.** Stores chlorinated product water produced by the TWPS.
- **Two 2-in. x 5-ft. blue-banded suction hoses and Adaptor A-07.** Connect the storage tanks to each other and to the distribution pump. Adaptor A-07 includes a shut-off valve.
- **Motor-Driven Distribution Pump P-7.** Distribution Pump P-7 is interchangeable with the Motor-Driven Raw Water Pump P-2.
- **Adaptor A-08.** Connects the P-7 pump outlet to the distribution hoses.
- **Two 2-in. x 65-ft. blue-banded discharge distribution hoses**. Connects distribution pump outlet to dispensing nozzle.
- **Two Dispensing Nozzles V-523A and V-523B.** Connect to the end of the distribution hoses and are used to dispense product water as needed.
- **One 5/8-in. x 50-ft. auxiliary hose.** Can be connected Pump Outlet Adaptor A-08 in place of the one of the distribution hoses to provide water back to the TWPS for MF and RO cleaning and for general purpose potable water use.
- **Auxiliary Hose Valve V-522.** Connected at the end of the auxiliary hose. Used to turn on or shut off the flow of water as needed.

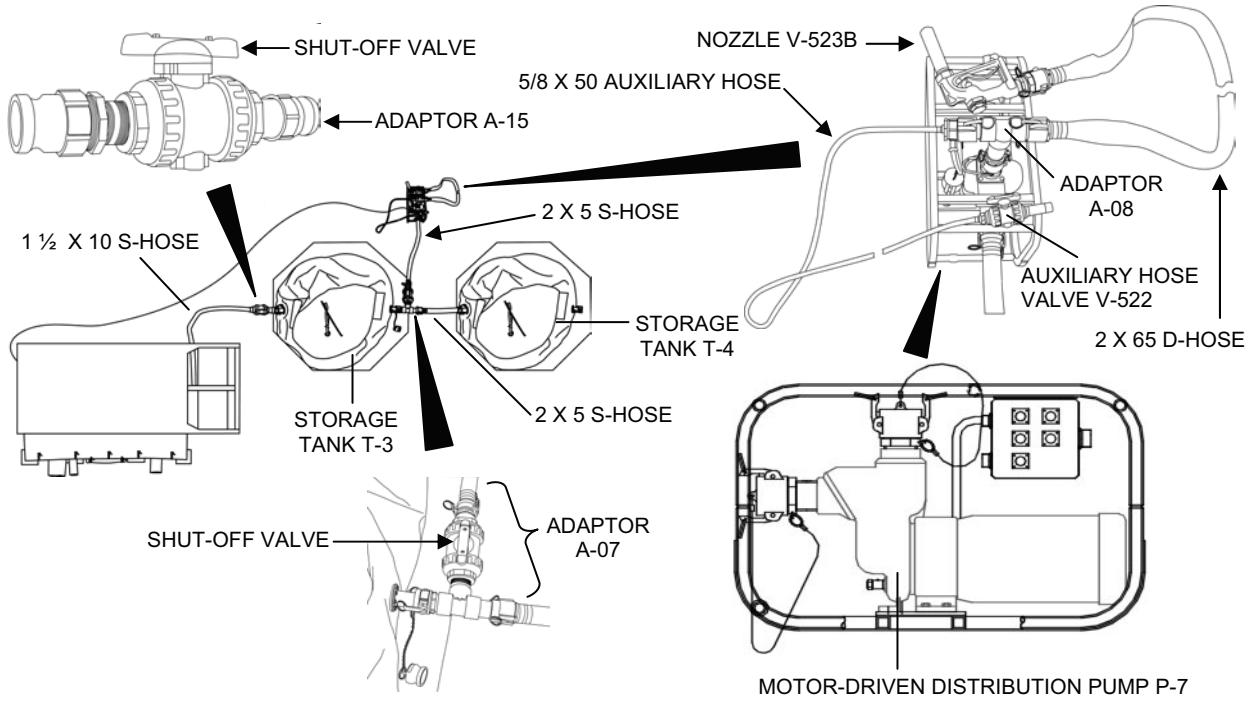

Figure 28. Major Components of the Standard Product Water Distribution System.

Extended Product Water Distribution System (A-TWPS) (see Figure 29)

The extended product water distribution system provides an additional 9000 gallons of product water storage and increase distribution capacity from 125 gpm to 250 gpm when deployed with the basic product water distribution system. The extended system is supplied with the A-TWPS. The extended product water distribution system includes the following major components (these components are in addition to the components in the basic product water distribution system; the components are listed in the general flow sequence through the system):

- **Three 3000-gallon collapsible storage tanks T-5, T-6, and T-7.**
- **Adaptor A-15.** Connects the product water suction hose to the inlet of one of the product water distribution storage tanks. Adaptor A-15 includes a shut-off valve.
- **Three 2-in. x 5-ft. suction hoses and Adaptor A-07.** Connect the storage tanks to each other and to the distribution pump.
- **Diesel Engine-Driven Distribution Pump P-8.** Distribution Pump P-8 is interchangeable with the Diesel Engine-Driven Raw Water Pump P-1.
- **Adaptor A-08.** Connects the P-8 pump outlet to the distribution hoses.
- **Two 2-in. x 65-ft. blue-banded discharge distribution hoses.** Connects distribution pump outlet to dispensing nozzle.
- **Two Dispensing Nozzles V-523C and V-523D.** Connect to the end of the distribution hoses. Used to dispense product water as needed.

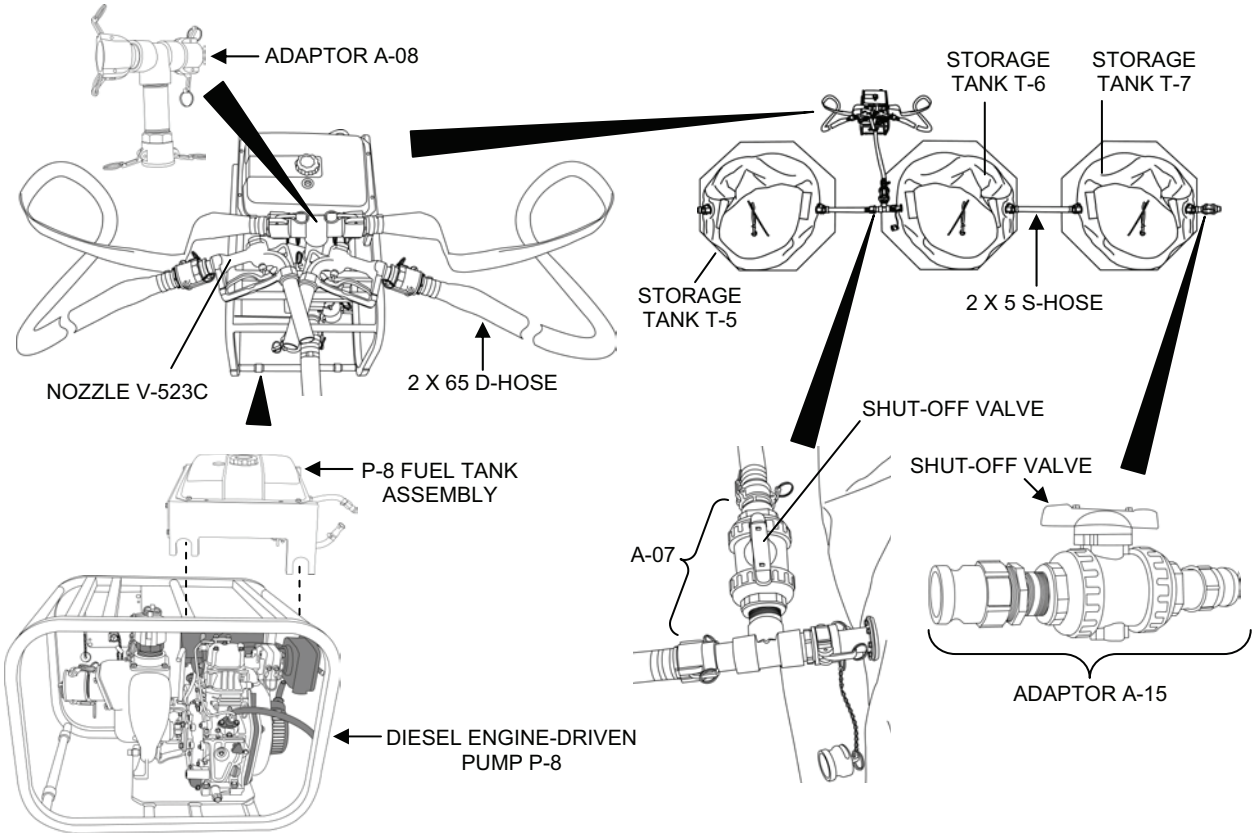

Figure 29. Major Components of the Extended Product Water Distribution System.

Operating Controls

The Operating Controls include the Operator Control Panel (OCP), the Feed Flow Control Panel, the Programmable Logic Controller (PLC), and several indicators and controls off of the OCP that require occasional adjustment and monitoring for manual operation.

The OCP provides all of the push buttons, switches, alarm lights and displays needed for operator control and monitoring of the system (see Figure 30).

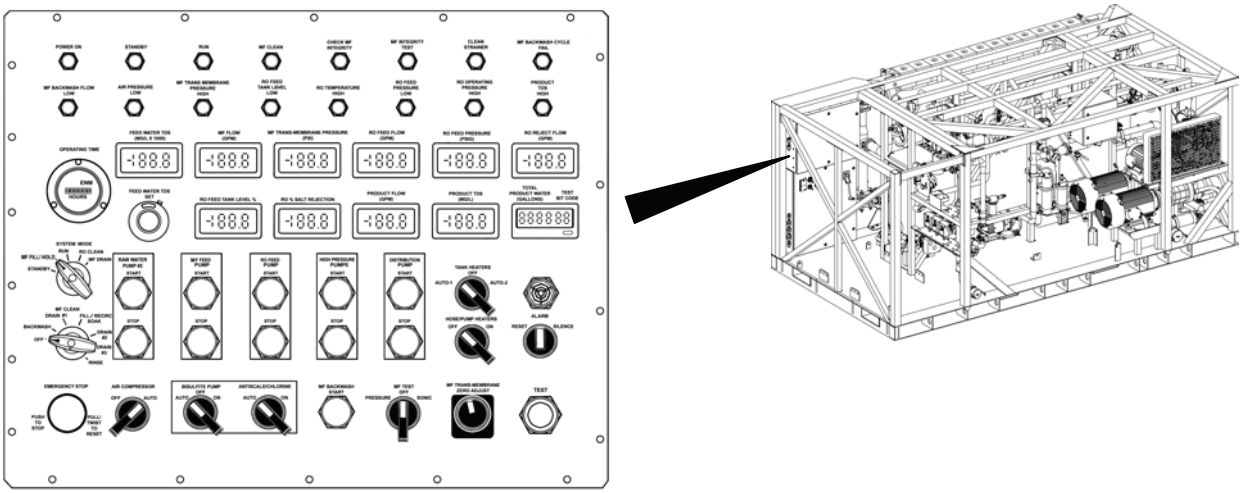

Figure 30. Operator Control Panel (OCP).

The Feed Flow Control Panel (see Figure 31) controls the operation of Filtrate Flow Control Valve V-202 (see Figure 10), which controls the flow of filtrate from the MF system to the RO feed tank.

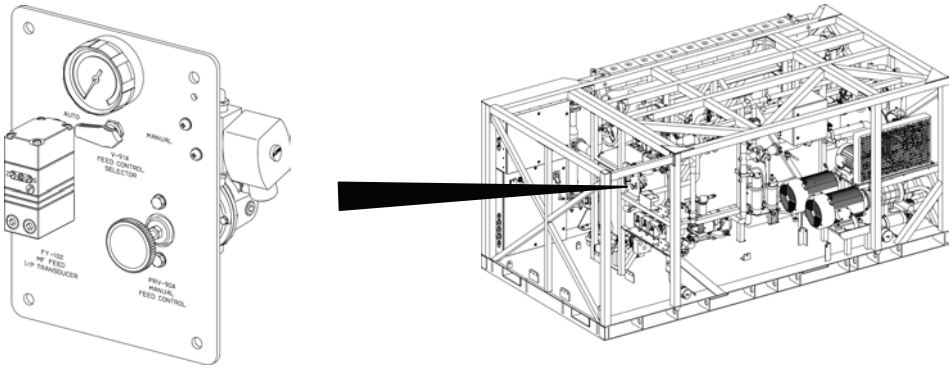

Figure 31. Feed Flow Control Panel.

The PLC provides automated control after operator startup and in response to operator switch selections. The indicators and controls off of the OCP provide the operator with local indications of system conditions and manual controls for certain operating functions of the TWPS. All the Operating Controls are identified

and described in detail in WP 0004, TM 10-4610-309-10, Description and Use of Operator Controls and Indicators.

Power Distribution System (see Figure 32)

The Power Distribution System distributes electrical power to components within the TWPS and to the pumps deployed off of the skid during operation. The power distribution system includes the following major components:

- **60 kW TQG (Tactical Quiet Generator).** Provided with the A-TWPS. The MC-TWPS comes without the TQG and may be powered by a separately provided TQG Model 806B or by an alternative 416 Volt AC, 3-phase power source.
- **Power Distribution Panel (PDP).** Contains the circuit breakers and motor starters needed to provide power to all of the electrical devices included in the TWPS.

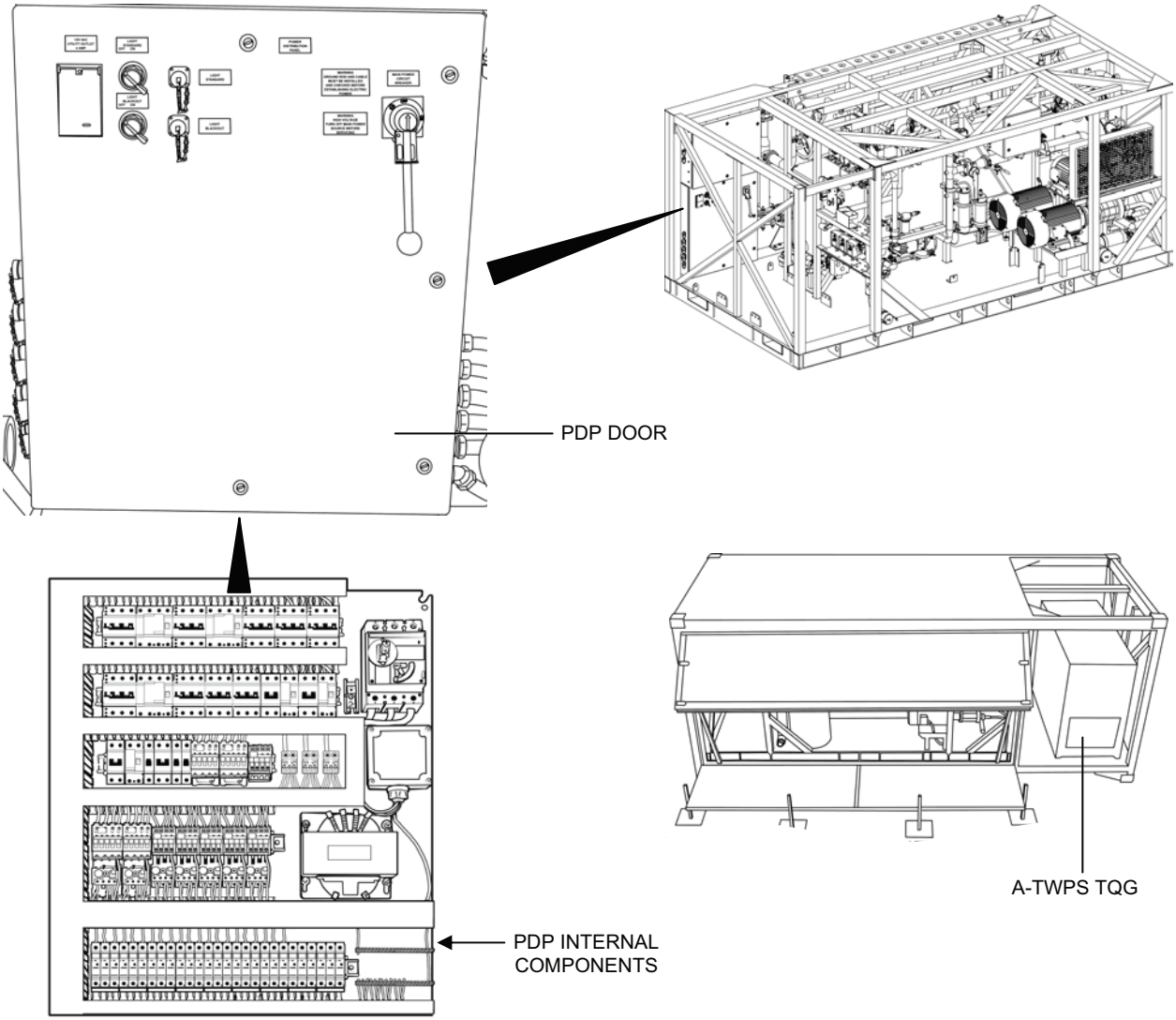

Figure 32. Major Components of the Power Distribution System.

Cold Weather Kit

The Cold Weather Kit is employed during cold weather operations (temperatures below 32° F to -25° F) to prevent water in the TWPS from freezing. The Cold Weather Kit is provided with the A-TWPS or as an extended capability module for the MC-TWPS. The following components are provided with both the A-TWPS and the Cold Weather Kit for the MC-TWPS (see Figure 33):

- **Diesel-Fuel Fired Forced Hot Air Space Heater.** Produces heat to heat the enclosed TWPS.
- **General Purpose Transformer.** Provides the power required to run the electrical components of the diesel fuel-fired forced hot air space heater. The transformer hangs over the TWPS frame next to the eye-wash station and is plugged into the right side of the PDP.
- **12-in. x 20-ft. Duct.** Delivers warm air from the heater to the TWPS and returns cold air from the TPWS to the heater.
- **Main Plenum.** Distributes warm air from supply duct from heater to 3 locations on the TWPS.
- **Two 8-in. x 6-ft. Ducts.** Deliver warm air from the main plenum to the operator station and the compressor areas of the TWPS.
- **Right Plenum.** A heat register that distributes the warm air from the second 8-in. x 6-ft. duct to the compressor area of the TWPS.
- **Two Right Plenum Hanging Straps.** Hang the right plenum above the air compressor motor. The TWPS is provided with the straps installed and are left in place.
- **4-in. x 5-ft 8-in. Duct.** Connects to the right side of the right plenum and delivers warm air from the right plenum to the lower right end of the RO vessels and MF Assembly.
- **Pump Insulating Platforms.** Placed under the raw water, MF, and distribution pump skids to insulate the pumps/motors/engines from the ground.
- **24V DC Starting Cable.** Connects the TQG battery terminals to an electric starter on the diesel-driven pump skid. Used to start the diesel-driven pump in cold weather. Stays with the TWPS and is stored in Box #1 when not in use.
- **Pump Heating Collars.** Wrap around a pump. Contain electric heat trace that provides enough heat to prevent water from freezing in the pump.
- **Pump Insulating Covers.** Enclose the pump skids. Insulate and protect the pump skid components from the weather.
- **Diesel Engine Exhaust Hose.** Metal hose that directs diesel-driven pump engine exhaust through a fitting in the pump's insulating cover.
- **Adaptor A-02 Heating Blanket.** Insulating blanket that is wrapped around Adaptor A-02 (Adaptor A-02 is used for priming the first raw water pump.) The blanket contains electric heat trace that provides enough heat to prevent water from freezing in the adaptor.
- **Hose Heating Blankets.** Insulating blankets that are wrapped around raw water and distribution hoses. Contain electric heat trace that provides enough heat to prevent water from freezing in the hoses
- **P-1 Pump Power Cable.** Delivers electricity from the PDP to the P-1 pump skid to power Adaptor A-02 and hose heating blankets.
- **Ice Hole Auger and Handle.** Used to drill a hole in the ice to access frozen raw water source.
- **A-02 Collar.** Wraps around the discharge of adaptor A-02. Insulates the adaptor discharge.
- **Ice Intake Strainer.** Inserted with suction hoses through a hole in an iced-over water source. Used in place of the floating inlet strainer.
- **Heat Gun.** Electric heat gun used to blow hot air on hoses, pumps, or other components that may have iced up.
- **100-ft. Extension Cord.** Used with the heat gun to reach components that are off the main skid.

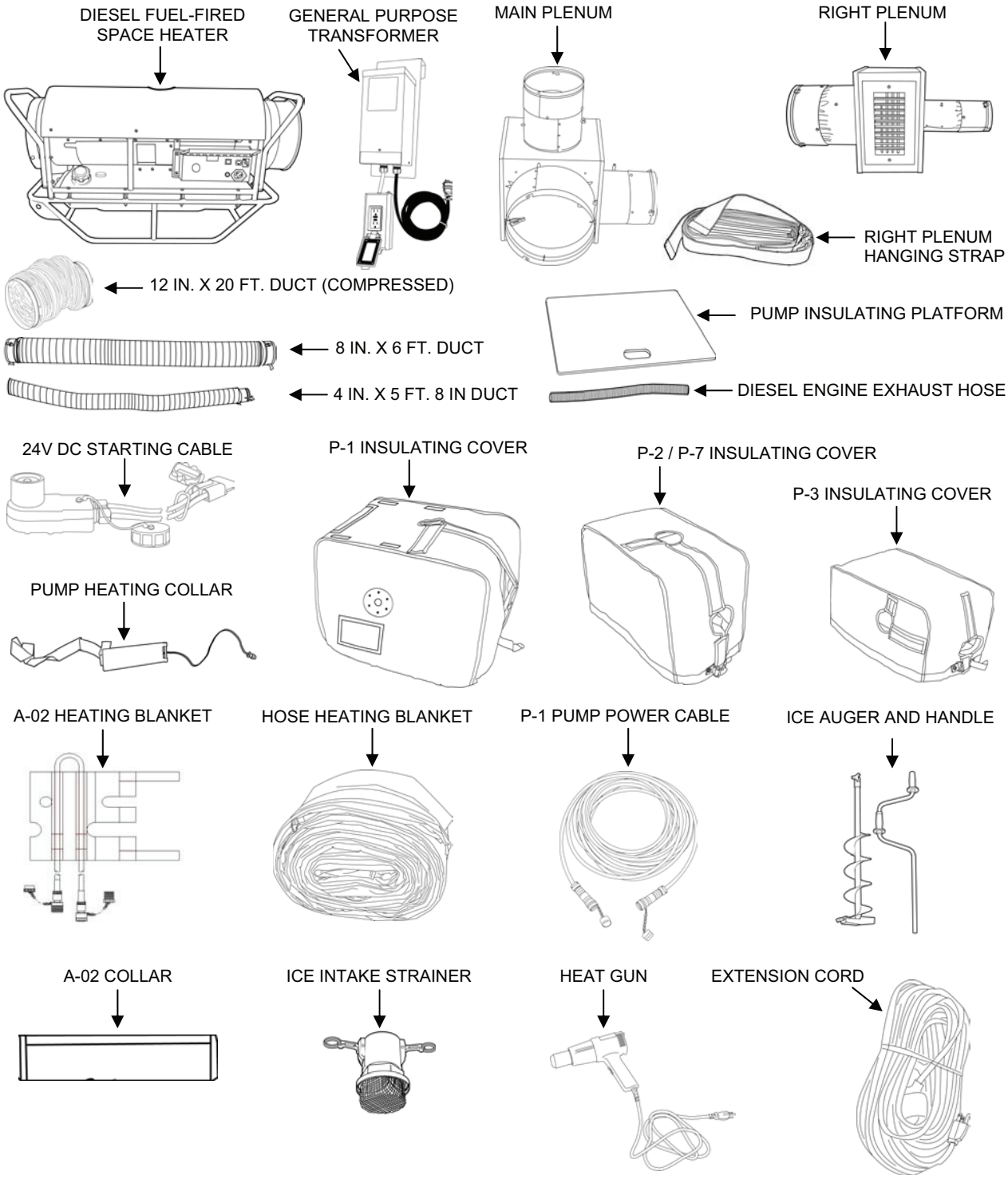

Figure 33. Major Components of the Cold Weather Kit.

The following cold weather components are provided only with the A-TWPS (see Figure 34):

- **Return Air Connector Assembly.** Connects the diesel heater cold air return duct to a flat rack panel on the operator side of the flat rack.
- **Pump Insulating Platform.** Platform for the diesel-driven pump in the extended distribution system.
- **P-8 Insulating Cover.** Cover for the diesel-driven pump in the extended distribution system.
- **Diesel Engine Exhaust Hose.** Exhaust hose for the diesel-driven pump in the extended distribution system.
- **P-8 Pump Power Cable.** Provides power for heating blankets that are connected at the P-8 skid.
- **Hose Heating Blankets.** Heating blankets for the hoses in the extended distribution system.
- **PDP Access Opening Cover.** Closes opening at the side of the PDP. Pump skid power cords are fed through a slit in the cover and connected to the PDP.
- **Product Water Door Access Cover.** Allows for the product hose and RO element drain tubes to extend outside the TWPS while closing the opening below the product water door in the flat rack panel at the right end of the TWPS.

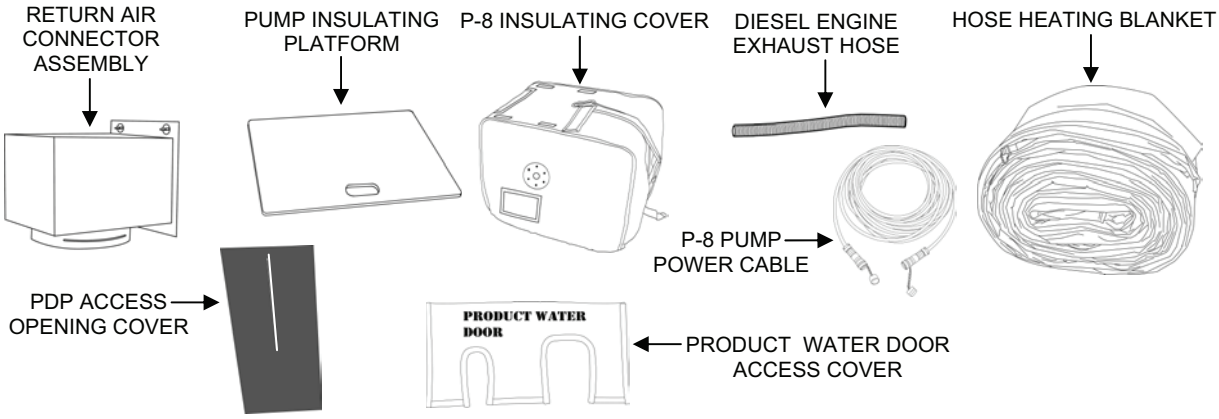

Figure 34. Additional Cold Weather Components for the A-TWPS.

The following cold weather components are provided only with the MC-TWPS (see Figure 35):

- **Return Air Adapter.** Provides a connecting point for the diesel heater cold air return duct at the operator end of the MC-TWPS.
- **Winter Cover.** Protects MC-TWPS and personnel from cold weather elements.

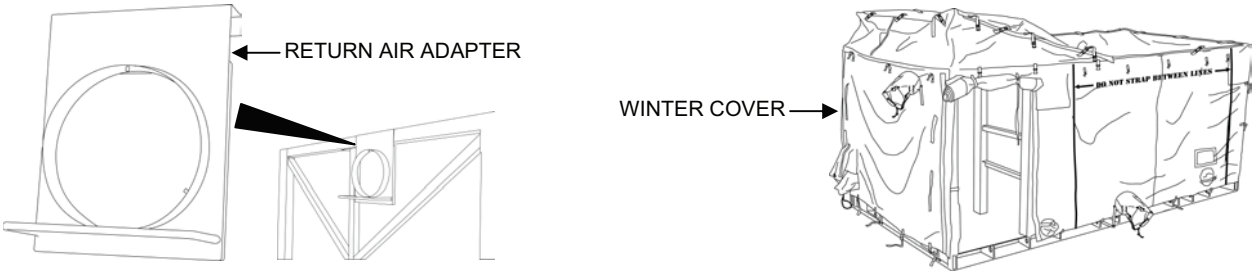

Figure 35. MC-TWPS Return Air Adapter and Winter Cover.

Cleaning Waste Discharge Components (see Figure 36)

The cleaning waste storage discharge components are use to discharge MF or RO element cleaning solutions and rinse water waste away from the TPWS. The following components are included as normal issue with both the A-TWPS and the MC-TWPS:

- **Adaptor A-10.** Replaces waste discharge Adaptor A-09. Connects the 4-in. x 5-ft. waste hose to a 2-in. x 10-ft., red-banded suction cleaning waste hose.
- **Three 2-in. x 10-ft. red-banded, suction cleaning waste hose.** Replaces the 6 x 50 waste out hose. Discharges cleaning wastes from the TWPS either to the ground or to a cleaning waste storage tank.
- **Hose End Valve Assembly Adaptor A-12**. Connected to the end of the 2 x 10 cleaning waste hose. The adaptor includes Cleaning Waste Outlet Valve V-705 that is closed after use to allow safe draining of the hose.

Cleaning Waste Storage Kit (see Figure 36)

The cleaning waste storage kit is used where required to store MF or RO element cleaning solutions and rinse water waste until the waste can be removed for discharge to a sanitary sewer or other designated point of waste discharge. All of the waste storage components are provided as standard issue with the A-TWPS and are available as an extended capability module for the MC-TWPS. The cleaning waste storage kit includes the following components:

- **One 1500-Gallon Cleaning Waste Storage Tank**. Used to store acid cleaning waste, caustic detergent cleaning waste, and the water that is used to rinse the MF fibers, the RO vessels, and the RO feed tank after certain cleaning procedures.
- **Three shutoff valve assemblies Adaptor A-16**. Used as tank shut-off valves to keep the waste in the tank when it is necessary to disconnect and reconfigure the cleaning waste hoses for waste neutralization and disposal procedures.

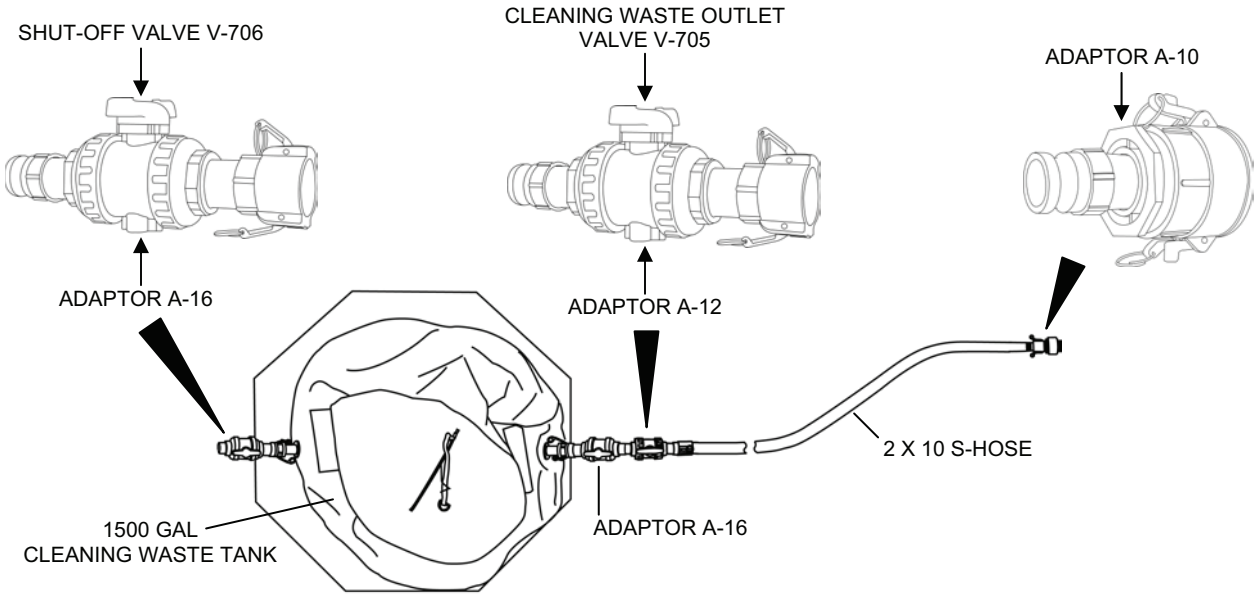

Figure 36. Cleaning Waste Discharge and Storage Components.

Ocean Intake Structure System (OISS) Kit (see Figure 37)

The OISS is used for seawater intake from beach locations when surf conditions or tide extremes make it difficult or impossible to use the floating inlet strainer. The OISS draws raw water from under the sand. It is provided as standard issue with the A-TWPS and as an extended capability module for the MC-TWPS. The OISS includes the following major components:

- **Four well points.** The well points are slotted and screened to keep sand out of the well points and risers.
- **Four 60-in. and four 24-in. riser pipes.**
- **Two end well point 90-degree elbow assemblies with gaskets for the female fittings.**
- **Two middle well point top 2-in. straight tee assemblies with gaskets for the female fittings.**
- **Six two-in., 10-ft. long yellow-banded suction hoses with gaskets for the female fittings.**
- **One middle 3-in. tee assembly with a gasket for the female fitting.**

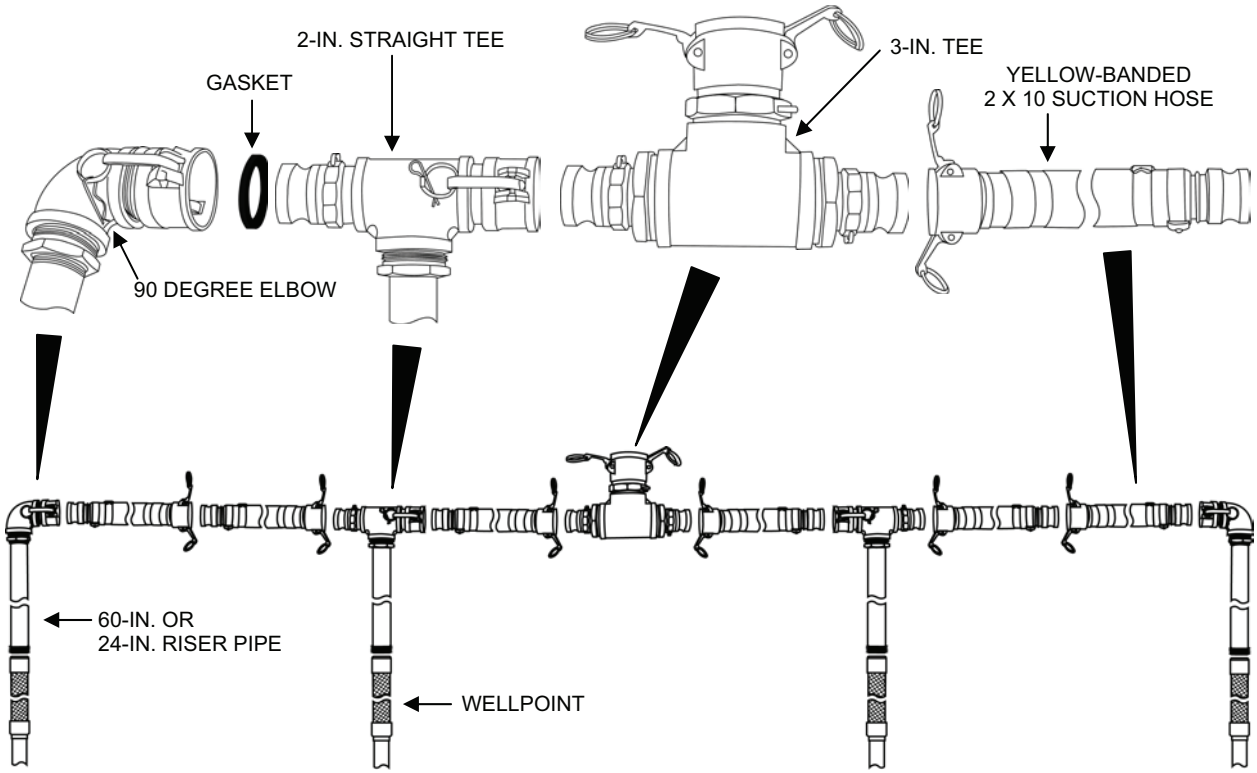

Figure 37. Major Components of the Ocean Intake Structure System (OISS) Kit.

NBC Water Treatment System (see Figure 38)

The NBC (nuclear, biological, chemical) water treatment system is setup as a final product water treatment step when the raw water source is contaminated with nuclear, biological or chemical warfare agents. The NBC filter is set up in the product line between the TWPS and the product water storage tanks. The NBC water treatment system includes the following major components:

- **NBC filter tank.** Supplied as standard issue for both the A-TWPS and the MC-TWPS.
- **Hypochlorite injection tube, injector and straps.** The injection tube is used to connect the TWPS hypochlorite tube to the injection point on the NBC filter tank. The straps are used to secure the tube to the product water hose between the NBC tank and the TWPS product water outlet. Supplied as standard issue for both the A-TWPS and the MC-TWPS and is packed inside the NBC tank.
- **Six bags of ion exchange resin.** Used for removing nuclear and chemical agents. This filter media is packed inside the filter tank on the A-TWPS and is provided as an extended capability module for the MC-TWPS.
- **Four bags of carbon.** Used for removing chemical and biological agents. This filter media is packed inside the filter tank on the A-TWPS and is provided as an extended capability module for the MC-TWPS.

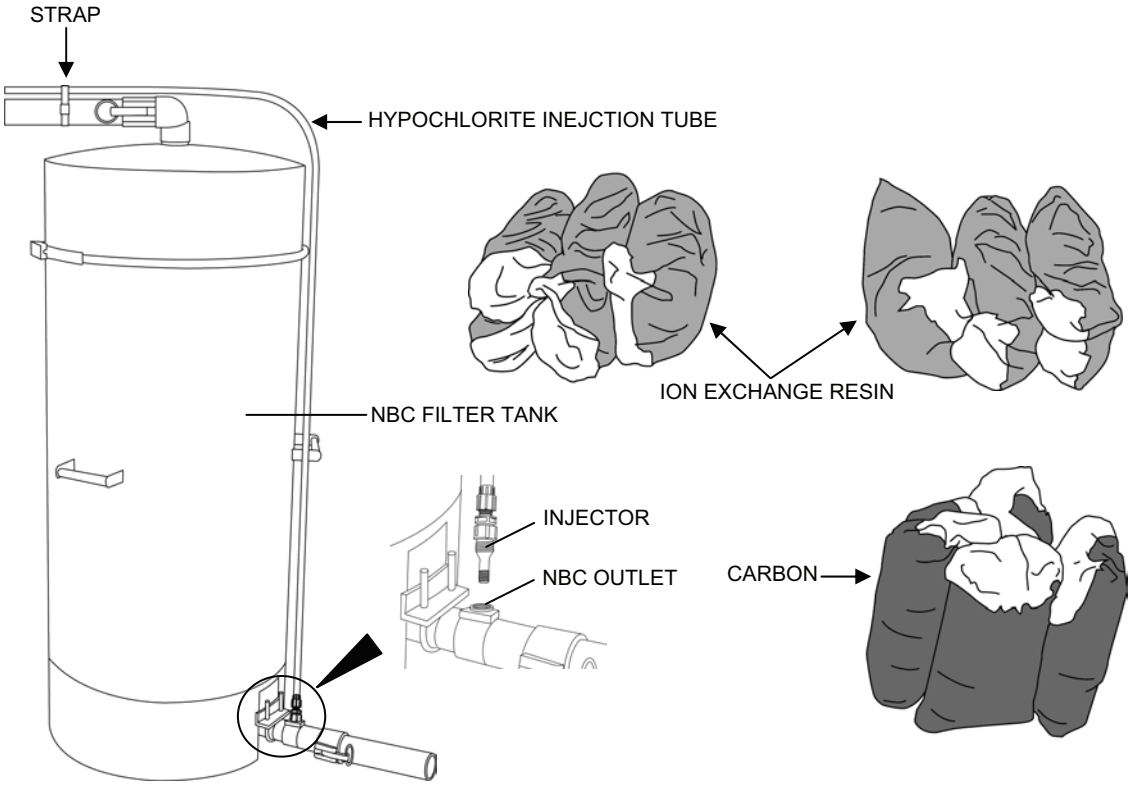

Figure 38. Major Components of the NBC Water Treatment System.

NBC Survivability Kit

The NBC survivability kit consists of a contamination avoidance cover (CAC) and three ropes with which to secure the CAC around the TWPS when it is deployed (see Figure 39). The CAC is deployed prior to NBC exposure to protect the TWPS from NBC warfare agent contamination. It is provided as standard issue on the A-TWPS or as an extended capability module for the MC-TWPS.

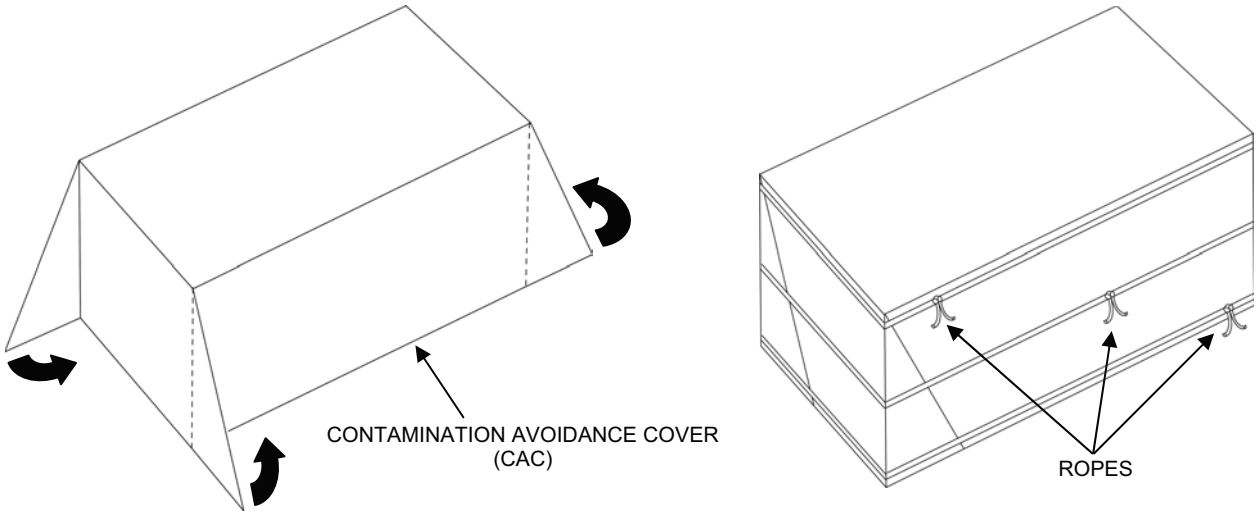

Figure 39. NBC Survivability Kit – CAC and Ropes.

DIFFERENCES BETWEEN MODELS

The TWPS is fielded in two versions: a Marine Corps version designated MC-TWPS and an Army version designated A-TWPS. The differences between the two models centers primarily on the extended capability modules that are optional and packaged separately for the MC-TWPS but that are standard and packed with the A-TWPS. There are only minor differences in setup and no differences in operation of the TWPS between the two versions. The major differences between the MC-TWPS and the A-TWPS are identified in Table 2.

Table 2. Major Differences Between the MC-TWPS and the A-TWPS.

Feature	MC-TWPS Characteristic	A-TWPS Characteristic
Mounting	Basic skid	Basic skid in an ISO load handling shelter
Dimensions	13’9” L x 6’ ½” H x 7’2” W	20’ L x 8’ H x 8’ W
Weight	9,552 lbs. fully packed out less fuel (without extended capability modules)	22,588 lbs. fully packed out less fuel
Power Cable	50-ft. cable. Hard-wired to the Power Distribution Panel at one end. Stripped, soldered wires at the other end. Feeds out under the PDP into the Operator Station area.	24-ft. cable. Hard-wired to the Power Distribution Panel at one end. Stripped, soldered wires at the other end. Feeds out the right end of the TWPS into the TQG area of the flat rack.
Cold Weather Module	Optional; separately packaged in reusable box – 2191 lbs.	Standard; packaged with TWPS – 693 lbs.
Cleaning Waste Storage Module	Optional; separately packaged in reusable box – 220 lbs.	Standard; packaged with TWPS – 60 lbs.
Ocean Intake Structure System (OISS)	Optional; separately packaged in reusable bags – 206 lbs.	Standard; packaged with TWPS – 259 lbs.
NBC Water Treatment Module	Optional; separately packaged in reusable box – 500 lbs.	Standard; packaged with TWPS – 432 lbs.
NBC Survivability Module	Optional; separately packaged in reusable bag – 34 lbs.	Standard; packaged with TWPS – 58 lbs.
Extended Distribution Kit	Not Available	Standard; packaged with TWPS – 498 lbs.

EQUIPMENT DATA

Performance:

Water Source	Water Production (minimum)
Surface water containing up to 20,000 mg/l TDS and up to 150 NTU @ 32 to 95 F	1500 GPH
Ground water containing up to 2500 mg/l TDS @ 32 to 95 F	1500 GPH
Ground water containing over 2500 mg/l TDS and up to 150 NTU, @ 50 to 95 F	1200 GPH
Normal Seawater containing 35, 000 mg/l TDS, 32 to 95 F	1200 GPH
Seawater containing 45,000 mg/l TDS, 50 to 95 F	1200 GPH
Seawater containing 45,000 mg/l TDS, 32 to 50 F	1000 GPH
Seawater containing 60,000 mg/l TDS @ 77 F	950 GPH

Dimensions:
MC-TWPS: 13’9” L x 6’ ½” H x 7’2” W
A-TWPS: 20’ L x 8’ H x 8’ W

Weight:
MC-TWPS: 9,552 lbs fully packed out for deployment less fuel (w/out extended capability modules)
A-TWPS: 22,588 lbs. fully packed out for deployment less fuel

Basic Metals:
MF System Piping: 70-30 Copper-Nickel
RO System:
Low Pressure Piping: 70-30 Copper-Nickel
High Pressure Piping: 254 SMO
Product Piping: 316L Stainless Steel
Air System Piping: 316 Stainless Steel
Skid: 6061 Aluminum
Flat Rack Frame: ASTM A500 Carbon Steel

Operating Temperature Range: -25° F to 120° F (cold weather kit required if operating temperature is below 32° F)

Storage temperature range: - 28° F to 160° F

Maximum water temperature: 100° F

Maximum slope of unit when deployed for operation: 2 degrees front to back (curbside), 1 ½ degrees side to side

Power source requirement: 416 VAC, 3 phase, 60 Hz, 60 kW

Fuel Type (60 kW TQG): DF2, DFA, JP8

Fuel Capacity (60 kW TQG): 43 gallons

END OF WORK PACKAGE

TACTICAL WATER PURIFICATION SYSTEM (TWPS) DESCRIPTION AND THEORY OF OPERATION THEORY OF OPERATION

0003 00

INTRODUCTION

Raw water contains suspended solids, which make it look turbid (cloudy or muddy). Suspended solids include silt, dirt, small particles, microorganisms, algae, and plant and animal products. Raw water also contains dissolved solids, which cause poor taste and can make water unfit to drink. The Tactical Water Purification System (TWPS) removes all suspended solids and reduces the dissolved solids to produce water that tastes good and is safe to drink. The TWPS can also produce drinking water from seawater containing high concentrations of salt and freshwater contaminated with nuclear, biological, and chemical warfare (NBC) agents.

This section provides a detailed theory of operation of the Tactical Water Purification System including:

1. Raw Water System
2. Micro Filtration (MF) System
3. Reverse Osmosis (RO) System
4. Air System
5. Chemical Injection System
6. Standard Product Water Distribution System
7. Extended Product Water Distribution System
8. Nuclear, Chemical, and Biological (NBC) System
9. Operating Controls
10. Power Distribution System
11. Cleaning and Preservation Operations
12. Cold Weather Module

Both the Army A-TWPS and the Marine Corps MC-TWPS versions are set on the ground at the water point for operation. There are only minor differences in setup and no difference in operation of the TWPS between the two configurations.

The basic water flow through the TWPS is illustrated in Figure 1. Raw water is pumped from the water source and into a micro-filter (MF) feed tank. One or two pumps may be used depending on the distance and elevation change from the source to the MF feed tank. A cyclone separator is used at beach locations to remove sand and silt. Water is then pumped from the MF feed tank through strainer S-2 to the micro-filter (MF) assembly. Strainer S-2 removes material larger than 600 microns from the water stream. The MF assembly removes suspended solids (dirt) and microorganisms down to 0.2 microns. Filtered water, called “filtrate” flows from the MF assembly into the reverse osmosis (RO) feed tank. Every 15 minutes a “backwash” operation is automatically performed. The backwash operation forces air through the MF elements to blow accumulated dirt and material off the filter elements. The dirt is flushed out of the MF assembly to a waste outlet. Continuing with the water purification process, feed water is pumped from the RO feed tank to two high-pressure pumps. The high-pressure pumps force some of the water though membranes in the RO vessels. Salts are rejected by the RO membranes and the water that passes through the membranes exits the TWPS as product water. The product water is stored in 3000-gallon tanks. Water that does not pass through the RO membranes is discharged as “reject” water to the waste outlet. The reject water passes through a turbocharger which transfers energy from the reject water to boost the feed water pressure to the RO vessels. Product water is pumped from the 3000-gallon tanks as needed for distribution. Two 3000-gallon tanks are provided with the standard distribution system. Three additional 3000-gallon tanks and an additional pump are provided with the extended distribution system.

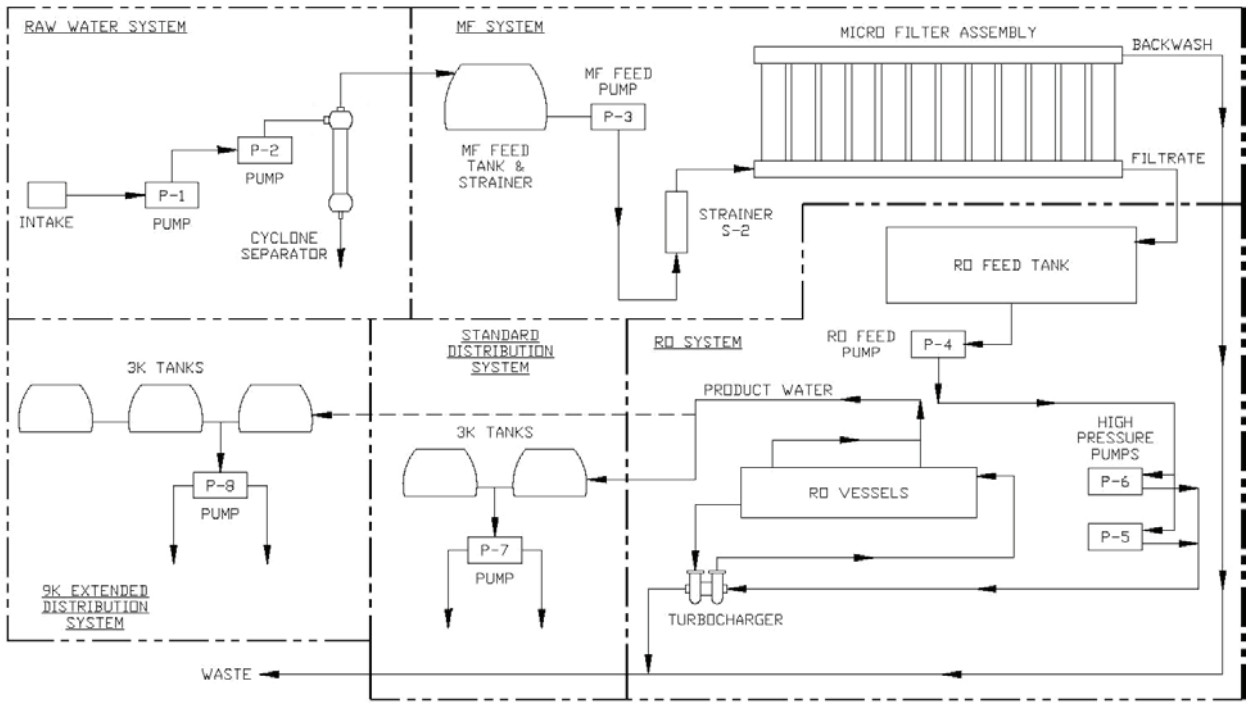

Figure 1. TWPS Flow Diagram.

The detailed information of the TWPS operational process in the following paragraphs provides process, control instrumentation and control logic information in a manner that will provide an understanding of the water purification process.

RAW WATER SYSTEM

The raw water system pumps raw water from the water source to the TWPS (see Figure 2). The main components of the raw water system are the floating inlet strainer with an anchor and rope, raw water suction and discharge hoses, a diesel engine-driven pump, an electric motor-driven pump, a cyclone separator, a static mixer, and various adapters that connect the hoses to the components of the raw water system. Some of the adapters also include a valve.

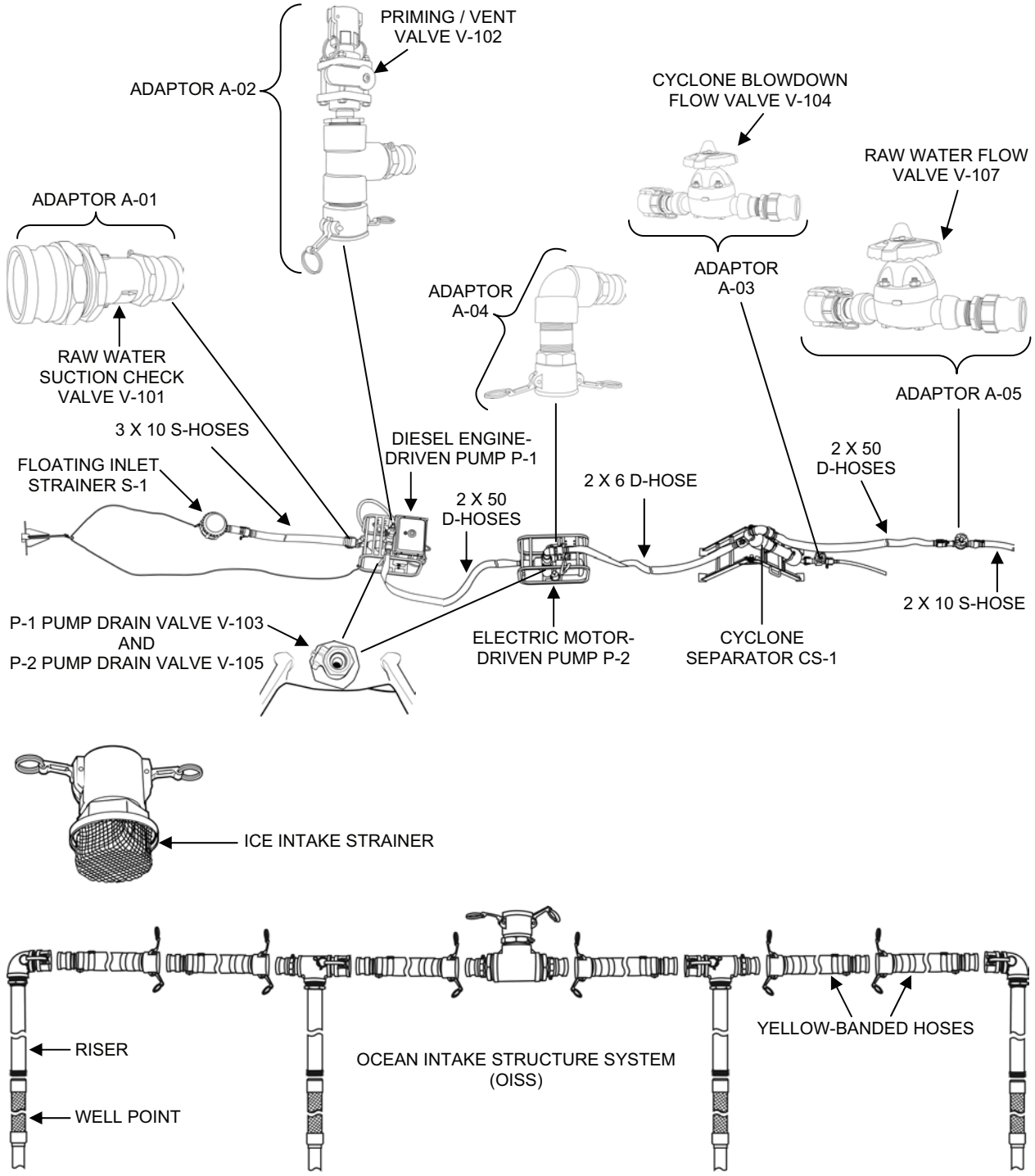

Figure 2. Main Components of the Raw Water System.

The raw water inlet strainer is connected to the end of a green-banded suction hose. The strainer floats just under the water, but still above the bottom of the water source. This keeps the TWPS from picking up bottom mud. The strainer contains a perforated screen that keeps out large surface debris and fish. An anchor is used to deploy the strainer and hold it in place. A 300 ft. rope secures the anchor to the strainer and is used to deploy and retrieve the anchor and the inlet strainer. A second, non-floating strainer is included with the cold weather module for use with ice holes.

The ocean intake structure system (OISS) is used for drawing raw water through beach well point intakes for raw water sources with surf or extreme tidal conditions. The OISS consists of four well points with risers connected to a header by yellow-banded hoses. The well points are slotted and screened to keep the beach sand out of the well points and risers. The well points and risers are jetted into the sand using one of the raw water pumps to draw water from the source and discharge it through a riser and well point. Once the riser/well point assemblies are installed, the pumps are set up as usual with the suction attached to the header end of the OISS. Water is drawn up through the well points and pumped through the raw water system.

Thirteen sections of three-in. diameter, ten-ft. long suction (rigid) green-banded hose come with the TWPS. These hose sections are used as needed to transport raw water from the inlet strainer or OISS to one of the two raw water pumps. The number used depends on site conditions.

The TWPS is equipped with two raw water pumps: an Electric Motor-Driven Pump P-2 and a Diesel Engine-Driven Pump P-1. If the elevation of the MF feed tank is 25 ft. or less above the pump location and within 200 ft. of the source, the Motor-Driven Pump P-2 is normally deployed without the P-1 pump. The P-1 pump may also be used by itself in this situation. If the MF feed tank is more than 25 ft. above the pump location or further than 200 ft. from the source, then both the Diesel Engine-Driven Pump P-1 and the Motor-Driven Pump P-2 are deployed. The engine-driven pump is deployed closest to the source and the motor-driven pump is deployed between the engine-driven pump and the MF feed tank. Figure 2 shows both pumps deployed. Valve V-103 is connected at the bottom of the Diesel Engine-Driven Pump P-1 and is used to drain the pump when needed such as for transportation, storage, or maintenance. Valve V-105 is a drain valve at the bottom of the Electric Motor-Driven Pump P-2 and serves the same function as V-103.

Adaptor Assembly A-01 connects the three in., green-banded suction hose from the water source to the suction inlet of the first pump. Adaptor Assembly A-01 includes Raw Water Suction Check Valve V-101, which helps hold the prime when the pump is stopped. A strap on the adaptor is secured to the pump frame to support the adaptor and the hose that is connected to the adaptor.

The cyclone separator is used at ocean beach water sites when the floating strainer is used. Both Raw Water Pumps P-1 and P-2 are deployed when the cyclone separator is used. The separator is positioned at the discharge of Electric Motor-Driven Pump P-2. As water enters the cyclone separator, a high-speed swirl is formed. The heavier dirt and/or sand is thrown to the outside and drops to the bottom of the separator where it is carried out by a small amount of water underflow. The required underflow is 5 gallons per minute (gpm). The main water flow leaves the cyclone separator at the center of the top of the separator to a discharge hose.

Adaptor Assembly A-03 connects the cyclone separator underflow outlet to a one-in. diameter, five-ft. long, braided flexible hose. Adaptor Assembly A-03 includes Cyclone Blowdown Flow Valve V-104, which is manually set to provide an underflow of five gpm. The nominal TWPS flow requirement is 65 gpm. When the cyclone separator is deployed, the raw water pumps will deliver 70 gpm and the net flow from the raw water system will be 65 gpm.

Adaptor Assembly A-02 connects the discharge outlet of the first pump to the appropriate discharge pressure (flexible) hose. The “appropriate” hose is determined by the deployment arrangement used. The list below identifies the possible raw water pump, cyclone, adaptor, and hose arrangements.

- Diesel Engine-Driven Pump P-1 → Adaptor Assembly A-02 → up to four sections of two-in. diameter, fifty-ft. long, discharge hose
- Electric Motor-Driven Pump P-2 → Adaptor Assembly A-02 → up to two sections of two-in. diameter, fifty-ft. long, discharge hose
- Diesel Engine-Driven Pump P-1 → Adaptor Assembly A-02 → up to four sections of two-in. diameter, fifty-ft. long, discharge hose → Electric Motor-Driven Pump P-2 → Adaptor Assembly A-04 → two-in. diameter, six-ft. long, discharge hose → cyclone separator → up to two sections of two-in. diameter, fifty-ft. long discharge hose

Adaptor Assembly A-02 includes Priming (Vent) Valve V-102 and a priming discharge hose.

Adaptor Assembly A-05 is connected to the discharge end of the last section of two-in. diameter, fifty-ft. long hose. A two-in. diameter, ten-ft. long, suction (rigid) hose is connected at the discharge end of Adaptor Assembly A-05 and discharges into the MF feed tank. Adaptor Assembly A-05 includes Raw Water Flow Valve V-107. Raw Water Flow Valve V-107 is manually set to adjust the flow of raw water to a rate that will maintain the proper MF feed tank level.

After the raw water system is deployed, the first raw water pump (the pump closest to the source) is primed by removing the priming hose from Adaptor Assembly A-02, opening the Priming Valve V-102, and filling the pump with water from the priming pitcher. The priming hose is then re-connected and the first pump is started. Depending on the suction lift and the condition of the pump, the pump will evacuate air from the suction hose and lift water from the source in as little as a few minutes to as long as 15 minutes. Once the air is evacuated from the suction hose and water is observed, Priming Valve V-102 is closed. If a second pump is used, the second pump is started after the first pump (P-1) has pressurized the discharge hose to the second pump (P2). Raw water flows from the pump discharge to the MF feed tank. The operator adjusts flow to the MF feed tank as needed to keep the tank at least half full, but not overflowing. Flow is set by adjusting Raw Water Flow Valve V-107. If flow is temporarily not needed, the motor-driven pump is stopped. If the engine-driven pump is used, this pump may be left running at idle, but the Priming (Vent) Valve V-102 at the discharge of the pump is opened to prevent the pump from overheating.

If raw water is drawn from a chlorinated water source, a static mixer is installed between the suction hose and the inlet of Adaptor Assembly A-05. The static mixer becomes the injection point for sodium bisulfite from a chemical injection system. Chlorinated water will rapidly damage the MF filter membranes and slowly degrade the RO elements. Sodium bisulfite is injected into and thoroughly mixed with the raw water in the static mixer before the water is discharged into the MF feed tank. Sodium bisulfite neutralizes chlorine and protects the MF filters and RO elements. The chemical injection system is described in more detail in this WP under the heading **Chemical Injection System**.

MICROFILTRATION (MF) SYSTEM

The Micro-Filtration system removes suspended solids (dirt) and microorganisms down to 0.2 micron, which would foul the RO membranes possibly leading to mission failure. The MF system consist of the MF feed tank, the MF feed tank strainer bag, the MF feed pump, the basket strainer, the MF assembly, automatic valves to direct and control the flow through the filters for normal filtration, backwash and cleaning and instrumentation. The MF assembly consists of 12 filter modules attached together to form a single assembly. All of the water discharged to the MF passes through the filter fibers and is filtered. The filtered water is called **Filtrate**.

The raw feed water discharges into the inside of the MF feed tank bag filter S-1 (see Figure 3). This is a cloth-type filter that is sized to trap seaweed fragments, which would quickly plug the basket strainer if not removed first. The MF Feed Pump (P-3) is a motor-driven pump deployed off of the skid near the MF feed tank. Connected at the bottom of the pump P-3 is Drain Valve V-108, which is used to drain the pump for maintenance or at the end of the mission. The MF feed pump draws water from the tank through the bag filter and discharges the water to the TWPS skid connection at the inlet to basket strainer S-2.

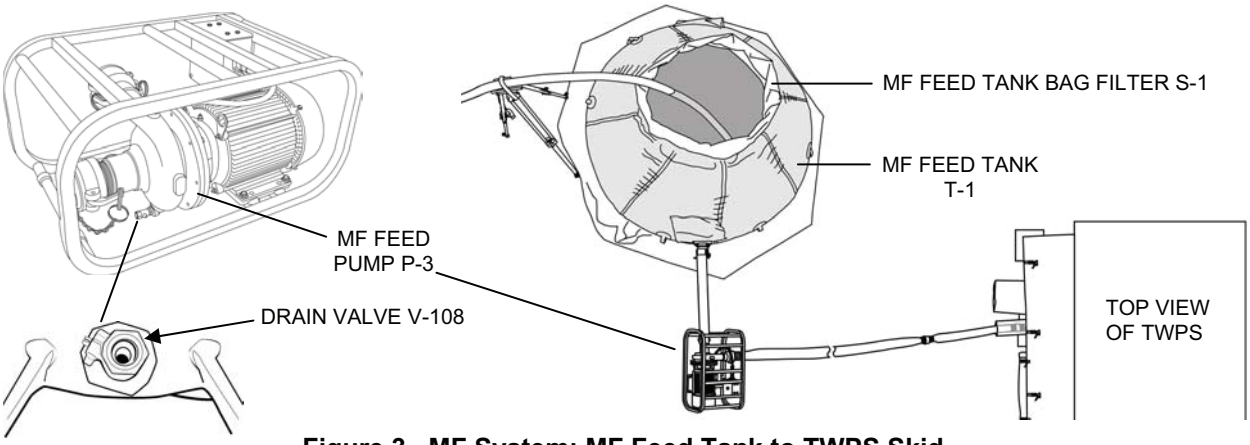

Figure 3. MF System: MF Feed Tank to TWPS Skid.

From the skid inlet connection, the MF feed water passes through the basket strainer S-2, which removes material larger than 600 micron (see Figure 4). The need to clean the strainer is indicated by the clean strainer alarm which is activated by low-pressure or low flow during the high flow shell sweep step of backwash. Vent Valve V-110, mounted between the strainer S-2 and valve V-111, is used as a vent when draining the basket strainer. Valve V-110 is also used as a sample valve for measuring the raw water conductivity. From the strainer, water flows through Automatic Valve V-111, which is open during normal processing to provide water flow as required. Pressure Gauge PI-101 measures the feed pressure to the MF assembly. Flow Element, FE-101, measures the MF feed flow. MF Feed Flow Transmitter FT-101 (see Figure 5) receives the flow element output and sends flow information for display on the Operator Control Panel (OCP). The MF feed flow splits to the upper and lower MF Feed Valves V-112 and 113 and into the MF assembly feed channels. During operation, the Upper Feed Valve V-112 is de-energized full open while the Lower Feed Valve V-113 is de-energized closed to an adjustable stop. The stop is set to provide similar flow rates to the top and bottom feed channels.

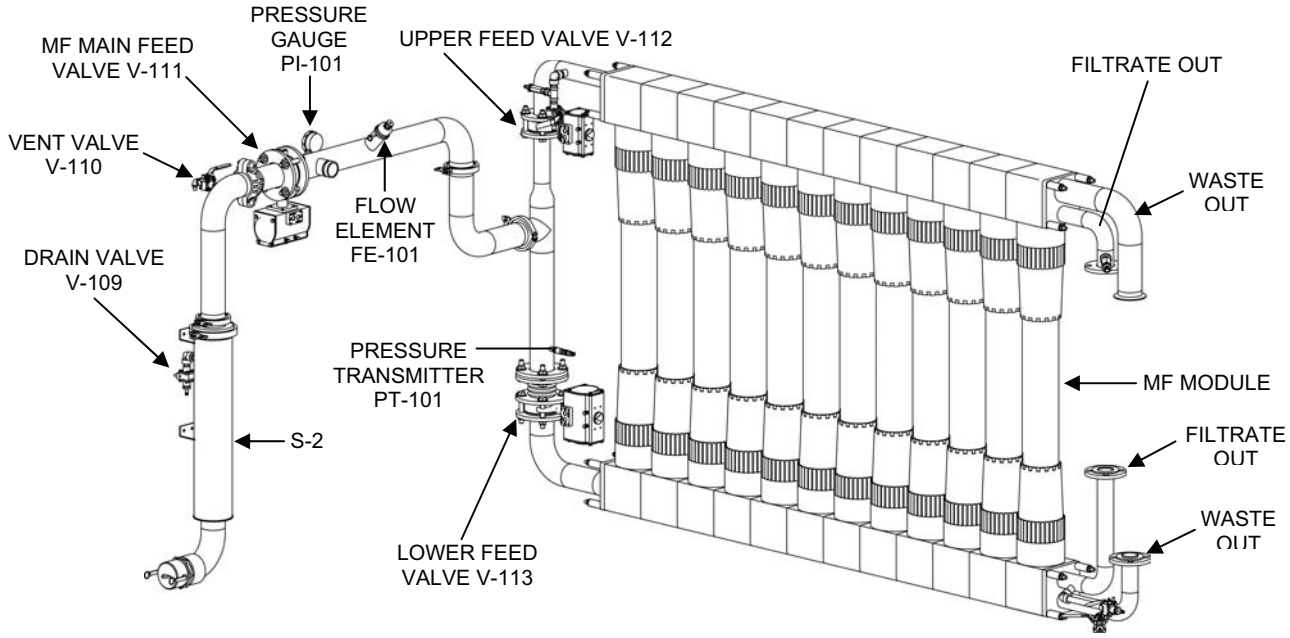

Figure 4. MF System: Strainer S-2 to MF Modules.

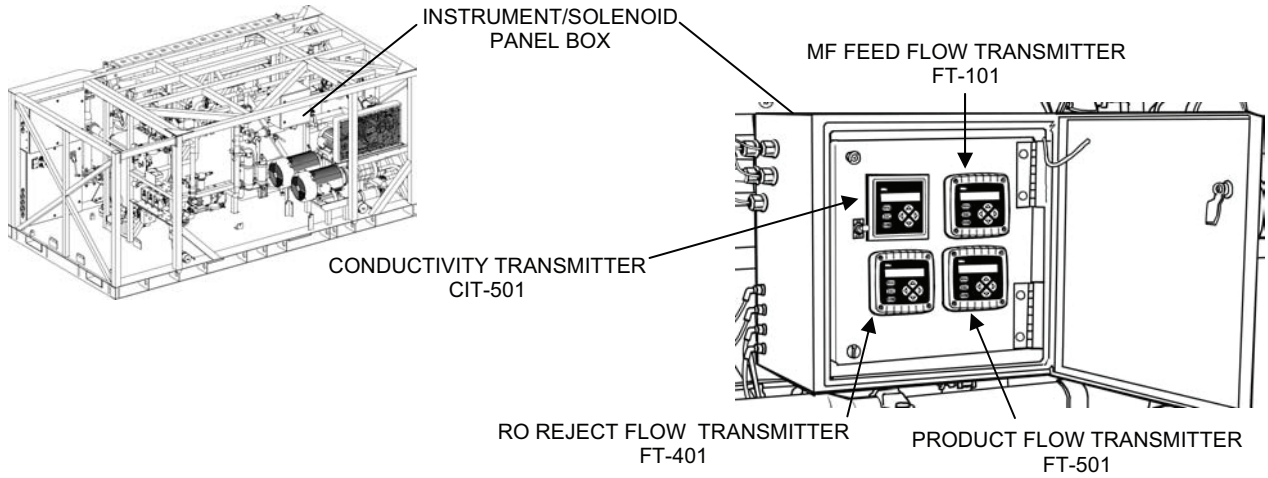

Figure 5. Instrument/Solenoid Panel Box.

The feed water flows into the top and bottom shell of each of the 12 MF elements and around the outside of the MF filtration fibers contained within each element (see Figure 6). The feed water then flows through the fiber pores and into the hollow center of each fiber. Dirt and organic materials in the feed water build up on the outside of the fibers until removed through the waste outlets by the next backwash. The filtered feed (filtrate) flows out the hollow center of the MF fibers and into filtrate collection channels. The channels collect the filtrate from the modules and direct the flow out the upper and lower filtrate outlets of the MF assembly.

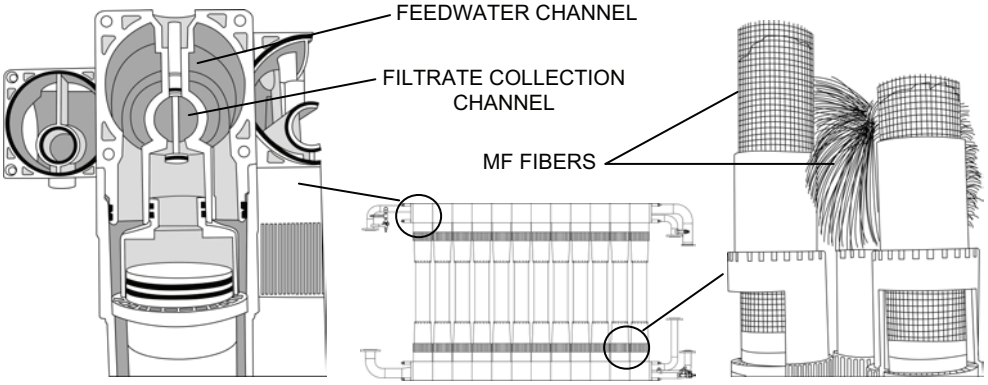

Figure 6. Micro-Filtration (MF) Process.

Filtrate that flows out the upper end of the MF assembly flows through Upper Filtrate Outlet Valve V-201 (see Figure 7). During normal operation V-201 is de-energized open to allow normal flow to Filtrate Flow Control Valve V-202. Filtrate that flows out the lower end of the assembly flows directly to Valve V-202. MF Filtrate Pressure Gauge PI-201 measures the filtrate pressure in the line between the Micro-filter (MF) assembly and Filtrate Flow Control Valve V-202. Piping directs the filtrate through the automatic Filtrate Flow Control Valve (V-202) and into the RO feed tank.

Pressure Transmitters PT-101 (see Figure 6) and PT-102 (see Figure 7) measure the feed and filtrate pressures. The difference between the feed pressure and the filtrate pressure is the trans-membrane pressure (TMP; pressure drop across the membranes, or filter element fibers, of the MF assembly). TMP (pressure drop) is displayed at the operator control panel (OCP) and is an indication of how clogged the fibers are. A high TMP indicates that the MF fibers are becoming clogged with material and need to be cleaned. A high alarm indicates the need to clean the MF. The Operator can also compare the PI-101 feed pressure gauge reading with the PI-201 filtrate pressure gauge reading as a manual check against the automatically measured and calculated TMP.

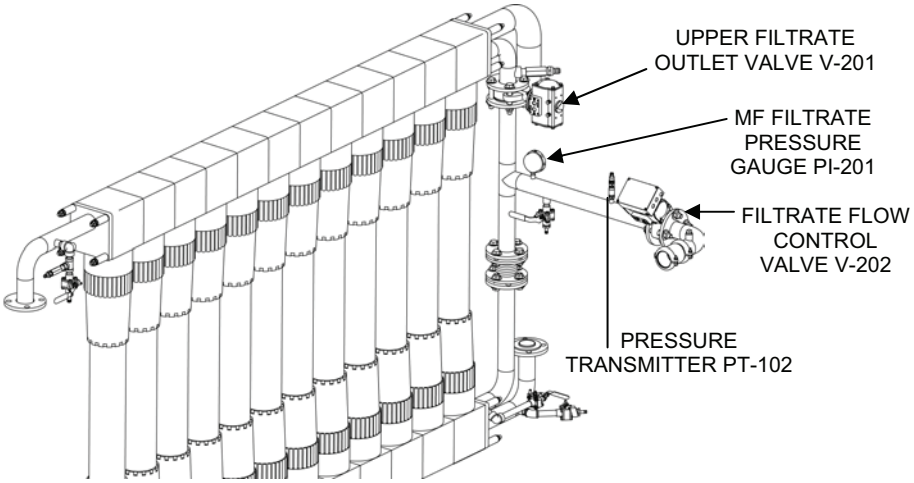

Figure 7. MF System: MF Modules to Discharge to RO Feed Tank.

MICROFILTRATION SYSTEM BACKWASH OPERATION

Valve sequencing for backwash is handled by the PLC (Programmable Logic Controller). The PLC program fixes the frequency at 15-minutes intervals. If the RO Feed Tank level has not reached 100%, the tank will fill to 100% before backwash begins. **THE OPERATOR MUST MANUALLY START THE FIRST BACKWASH SEQUENCE.**

The backwash operation is run automatically through the following stages (see Figure 8; also refer to **AIR SYSTEM** for air system/solenoid valve theory of operation and illustrations):

1. Drain fibers: 15 psig air pushes water out of the MF fibers to the RO feed tank
    a. Valves V-111, V-112, and V-201 close. Valves V-113 and V-202 open.
    b. Air System Solenoid Valve XV-902 opens to allow low-pressure air through Check Valve V-912 and into the upper filtrate outlet channel of the MF system. This low-pressure air purges the filtrate out of the MF fibers to the RO feed tank.
2. Pressurize fibers: 100 psig air pressurizes the inside of the MF fibers
    a. XV-902 and V-202 close.
    b. With all valves now closed, including MF Upper Filtrate Valve V-201, Solenoid Valve XV-901 opens allowing 100 psig air through Check Valve V-912 to pressurize the filtrate side (inside) of the MF fibers.
3. Blow-back: the MF shell outlet valves are opened to allow the100 psig air in the MF fibers to blow suddenly through the fibers to the MF shell
    The Shell Backwash Upper and Shell Lower Outlet Valves V-401 and V-402 open quickly to provide a sudden release of pressurized air. This rapid expansion of air through the fiber pores blows the dirt layer from the outer surfaces of the fibers.
4. Scrub: air and feed water flushes dirt out of the MF shell
    With the backwash air still on, Main Feed Valve V-111 de-energizes open. This allows feed water to flush the dirt out of the MF shell, through the Backwash Upper Outlet Valve V-401 and out the TWPS waste outlet.
5. Sweep (or shell sweep): feed water only flushes dirt out of the MF shell
    Backwash Air Valve XV-901 closes and the feed water continues to sweep the dirt out of the MF shell.
6. Fill fibers: feed water flows into the MF shell and into the fibers
    a. Normal flow conditions are reset.
    b. Upper and Lower Feed Valves V-112 and V-113, Upper Filtrate Valve V-201, and valve V-111 are all de-energized open.
    c. Upper and Lower Backwash Valves V-401 and V-402 de-energize closed and the feed water is pushed into the fiber walls and into the fiber cores.
7. Rewet 1: air is used to force water into the fibers, then the air pressure is released
    a. The Feed Valve V-111 and the Main Filtrate Valve V-202 close.
    b. The Upper Backwash Valve V-401 opens to exhaust pressure from the shell.
    c. The Upper Backwash Valve closes and the Backwash Air Valve XV-901 opens to pressurize the water in the fibers through Check Valve V-912.
    d. XV-901 closes, the Main Filtrate Valve V-202 opens and, after a momentary delay, the Upper Backwash Valve V-401 opens to blow off the air pressure. This step is noted by the sound of air and water discharge into the RO feed tank.
8. Rewet 2
    The Rewet 1 stage is repeated.
9. Return to normal
    The MF filtration system returns to normal operation.

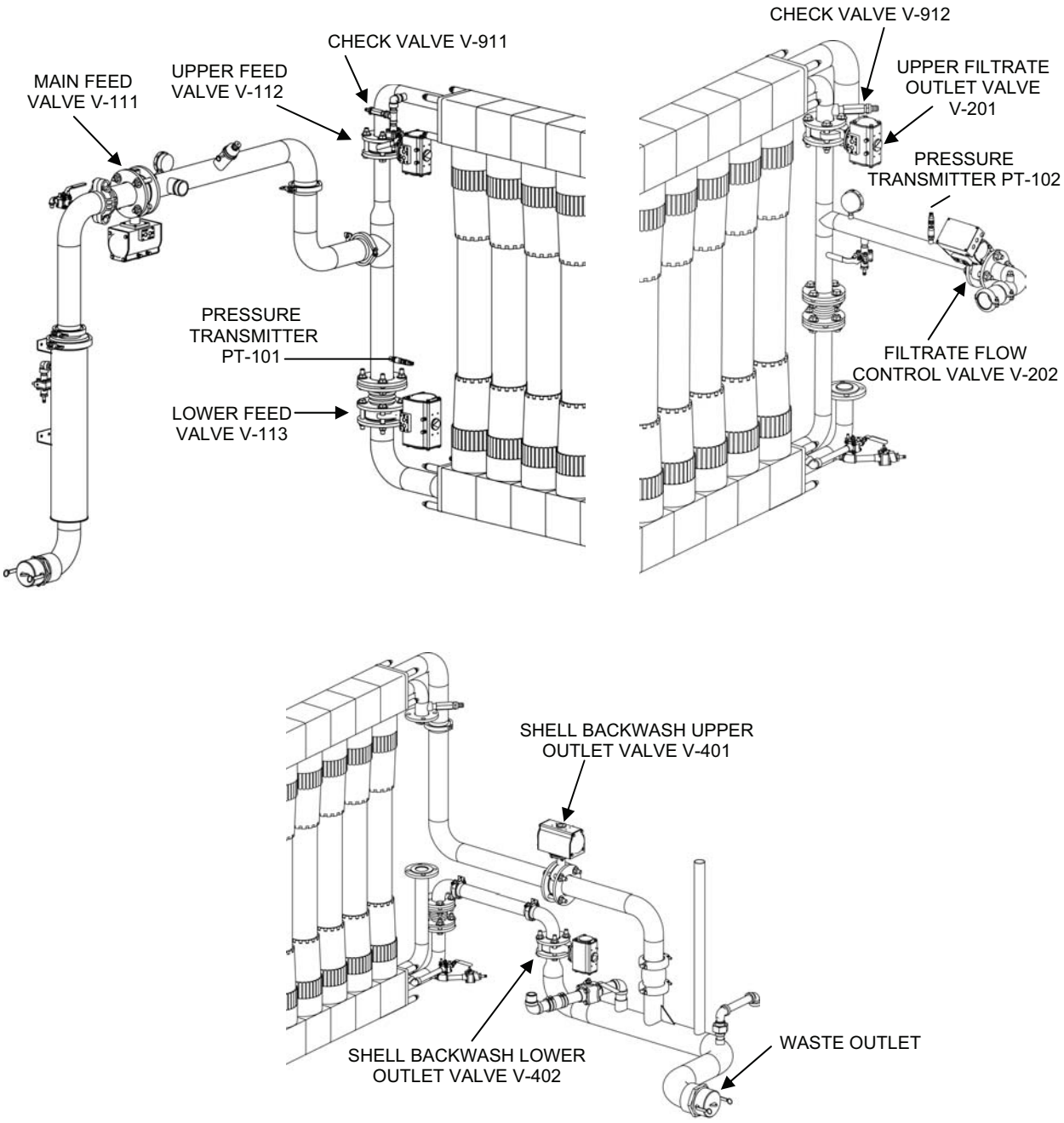

Figure 8. MF Backwash Operation.

The total time off-line for backwash and rewet is 3 minutes. During this time water continues to be drawn from the RO feed tank and processed through the rest of the TWPS to provide a continuous flow of product water. Since filtrate is temporarily stopped from flowing to the RO feed tank during backwash, the RO feed tank level drops to approximately 1/4 full during this time. The MF feed tank level will drop approximately 125 gallons during the shell sweep stage and will be low by approximately 90 gallons after backwash is completed. If Flow Control Valve V-107 is properly adjusted, the raw water flow will replace this loss by the next backwash. The MF feed tank holds 1000 gallons full and is normally kept between half and three quarters full by adjusting the raw water flow.

The blow-back stage results in a sudden and very high velocity surge in the waste out piping and hose, which must be allowed to pass easily. The red-banded, waste out hose is a 6-in. discharge hose, large enough that it will not be fill with water and can expand to pass the blow-back air. This hose should be set to slope steadily back to the water source.

The backwash removes all of the loose dirt. However, some material sticks or gets trapped inside the pores of the fibers. As a result, the pressure drop (TMP) across the fibers increases over time. To measure this, pressure transmitters PT-101 and PT-102, measure the MF feed water and filtrate pressures. The pressure drop, trans-membrane pressure (TMP) is calculated by the PLC and displayed at the OCP. When it reaches a set maximum, a high TMP alarm indicates the need to schedule cleaning within the next 40 hours. Typically, the interval between cleanings will be at least 300 hours of operation and could be as long as 1000 hours.

The filtrate typically is very low in suspended solids content and is free of micro-organisms. Broken fibers, however, may allow a flow of raw water directly into the filtrate. A high number of broken fibers will lead to enough material in the filtrate to foul the RO elements with dirt and bacterial slime. Broken fibers can be detected by a pressure hold (integrity) test, which is conducted automatically after operator selection. A test fail light indicates that the leakage detected is too high. The alarm is set well below the point where serious RO fouling would occur. The air test is conducted at the beginning and end of each mission to indicate fiber condition and the need for scheduled maintenance. The distribution of broken fibers among the 12 elements is determined by using a sound probe leak detector to determine the point of leakage. Defective elements can be individually replaced and may also be individually isolated by closing the individual module filtrate valves.

REVERSE OSMOSIS (RO) SYSTEM

The RO process is pressure driven. Pressure moves water through the pores of the RO membranes while most of the salts are rejected by molecular level electrical charges in the pores. Only a portion of the feed water is forced through the membranes, becoming product water. The water that does not pass through the membranes contains concentrated salts and is discharged as reject. Increasing the pressure increases the product water flow. Feed water with a higher salt content requires higher pressure to force water through the RO membranes and produce water than feed water with a lower salt content. For example, low salt river water may require only 300 pounds per square inch gauge (psig) to produce 25 gpm, while normal seawater may require 800 psig to produce 20 gpm. The maximum pressure available is 1200 psig. Colder feed water also requires higher pressure than warmer feed water. Fouling, biological films, and salt scale also restrict water flow through the membrane and force operation at higher than normal pressures.

Filtrate from the MF system is stored in the RO Feed Tank T-2 (see Figure 9). The RO feed tank stores a sufficient supply of filtrate to allow the production of product water to continue uninterrupted during the intervals when the MF modules are being backwashed. This tank is also used for cleaning solutions when cleaning the RO and MF.

Level Transmitter LT-201 provides the level measurement for PLC control of the tank level. After a backwash, the filtrate flows at approximately 62 gpm to refill the tank until the level reaches the high-level point. After reaching the high level point, the level is controlled to remain at this point until the next backwash. The tank level is displayed on the OCP as percent of high level.

Temperature Indicator TI-202 is a dial thermometer threaded into the RO feed tank.

Tank Heaters H-1 and H-2 are used for heating cleaning solutions and, if needed, to provide added generator load to avoid wet stacking during normal operation.

Strainer S-3 sits inside the tank over the RO feed pump suction to prevent objects, which may fall into the tank, from entering the pump.

RO Feed Pump P-4 draws filtrate from the tank as RO feed water and provides the pressure needed by the HP Pumps. With cleaning bypass valves properly set, this pump also circulates the cleaning solutions used when cleaning either the MF or RO.

Antiscalant Injection Check Valve V-623 is connected between the RO Feed Pump and V-212. The injection check valve injects a measured amount of antiscalant into the RO feed water leaving the feed pump. This antiscalant inhibits salt scale formation on the RO membranes. (See Chemical Injection System for further explanation.)

High Pressure Pump (HPP) Feed Valve V-212 is open for normal operation and is manually closed for cleaning and when removing the Inline Strainer S-4.

Strainer S-4 protects the HP pumps by removing sand and dirt, which may blow into the RO feed tank. S-4 Drain Valve V-213 at the bottom of Strainer S-4 is used to drain the strainer.

RO Feed Pressure Gauge PI-202 indicates the pressure from the RO feed pump for operator reference. Usual pressure is 40 to 45 psig.

RO Feed Pressure Transmitter PT-201 provides a pressure measurement that is used by the PLC to protect the HP pumps. The transmitter and PLC set off an alarm and shut down the HP pumps when the pressure from the RO feed pump drops below 35 psig.

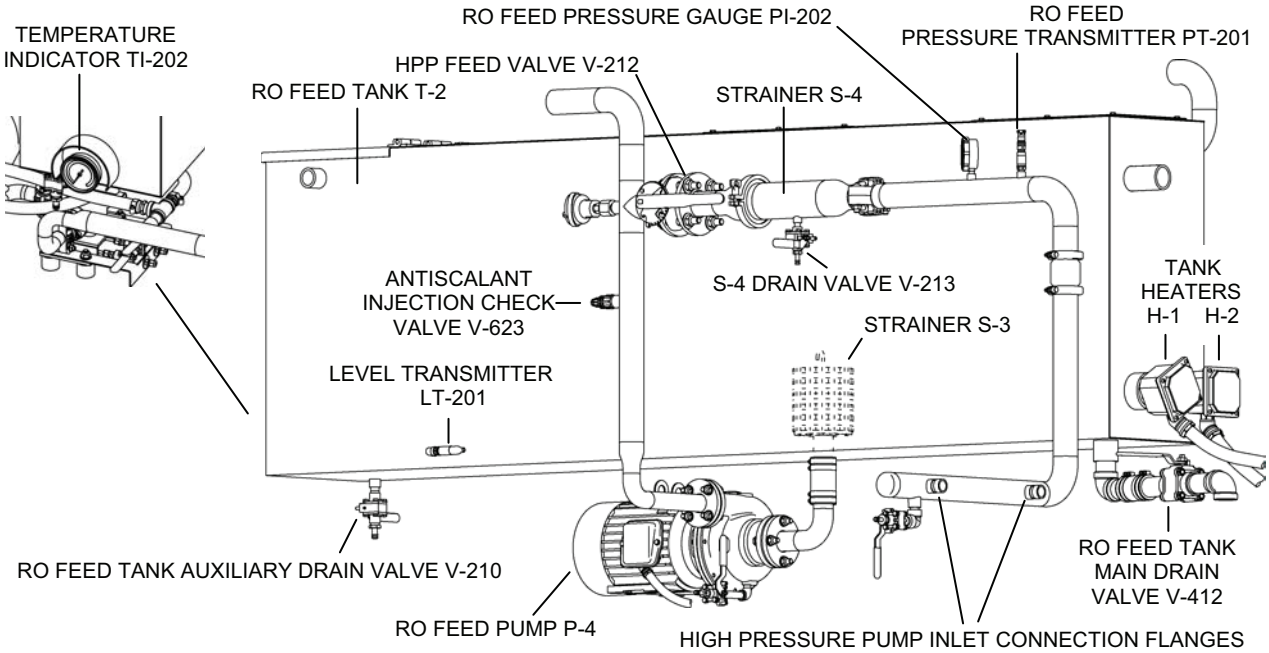

Figure 9. RO System: RO Feed Tank to High Pressure Pump Inlets.

Two High Pressure Pumps (HPP) P-5 and P-6 provide the operating pressure required by the RO elements to produce the desired product water flow (see Figure 10). A portion of the feed water to the pumps acts as a lubricant and is discharged at low pressure back to the RO feed tank near the pumps.

HPP Discharge Pressure Gauge PI-301 shows the High Pressure Pump discharge pressure. HPP Outlet Pressure Relief Valve RV-301, set at 1050 psig, protects the HP pumps from over pressure.

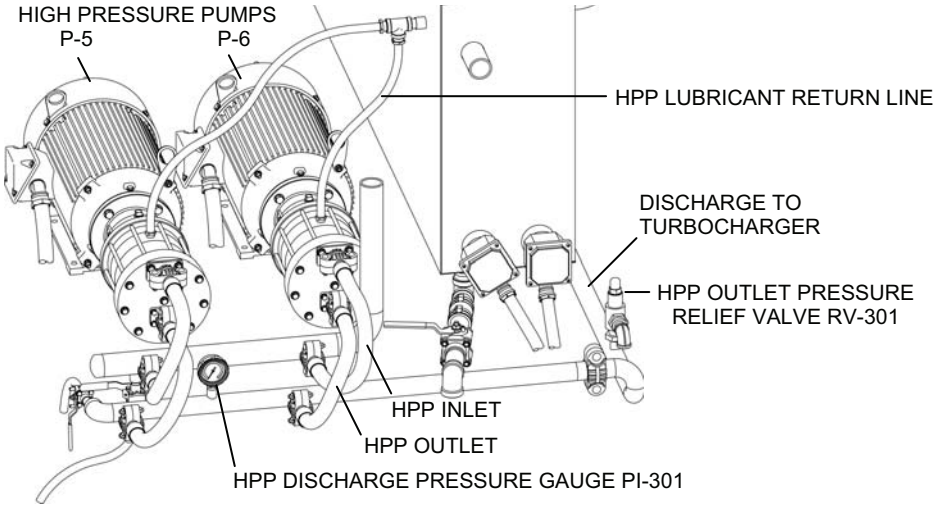

Figure 10. RO System: High Pressure Pumps.

The Pressure Recovery Turbocharger PRT-1 consists of a pump and a turbine connected together on a common shaft within a common casing (see Figure 11). RO feed water from the HP pumps is received at the turbocharger pump inlet. The turbocharger pump boosts the water pressure and discharges to the RO vessels. RO reject from the RO vessels passes through the turbocharger turbine. Pressure energy from the RO reject water is transferred from the turbocharger turbine to the turbocharger pump through the common shaft.

RO Feed Pressure Transmitter PT-302 provides RO feed pressure (pressure to the RO vessels) display at the OCP and a high-pressure alarm if the pressure exceeds 1225 psig. RO Feed Pressure Gauge PI-304 provides a direct alternative reading of the pressure.

RO Feed Pressure Relief Valve RV-302, set at 1250 psig, protects the RO vessels from over pressure and Air Purge Valve V-913 is opened to purge water or cleaning solution from the RO system.

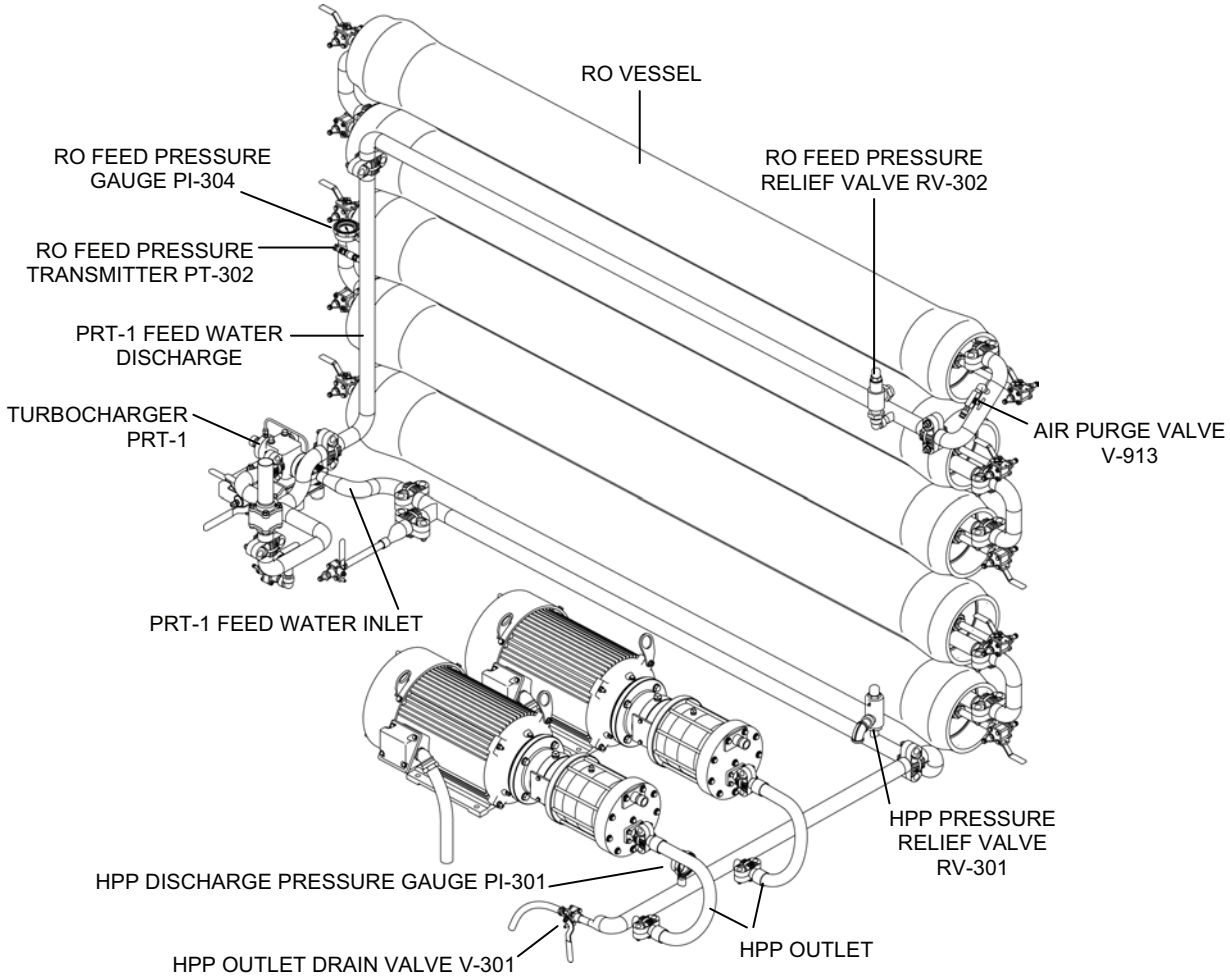

Figure 11. RO System: High Pressure Pumps to RO Vessels.

Five RO vessels, each containing two RO elements, remove dissolved solids (salts) to produce the product water through a process called reverse osmosis. In this process, pressurized RO feed water is delivered to the RO elements in the RO vessels. In the RO elements, the feed water flows across sheets of membrane material (see Figure 12). Some of the water passes through the membrane sheets and is collected to become product water. Most of the dissolved solids (salts) are blocked from passing through the membranes. Only 1/3 to 1/2 of the RO feed water passes through the membrane sheets to become product water. The rest of the water containing most of the dissolved solids continues flowing past the membranes and exits the RO vessels as reject. The RO feed water enters the top vessel and flows through each of the vessels in series and exits the bottom RO vessel as reject. The portion of feed water that passes through the RO membranes exits as product water from the outer end of both elements in each RO vessel. The product water collects in a manifold and flows out to the distribution system.

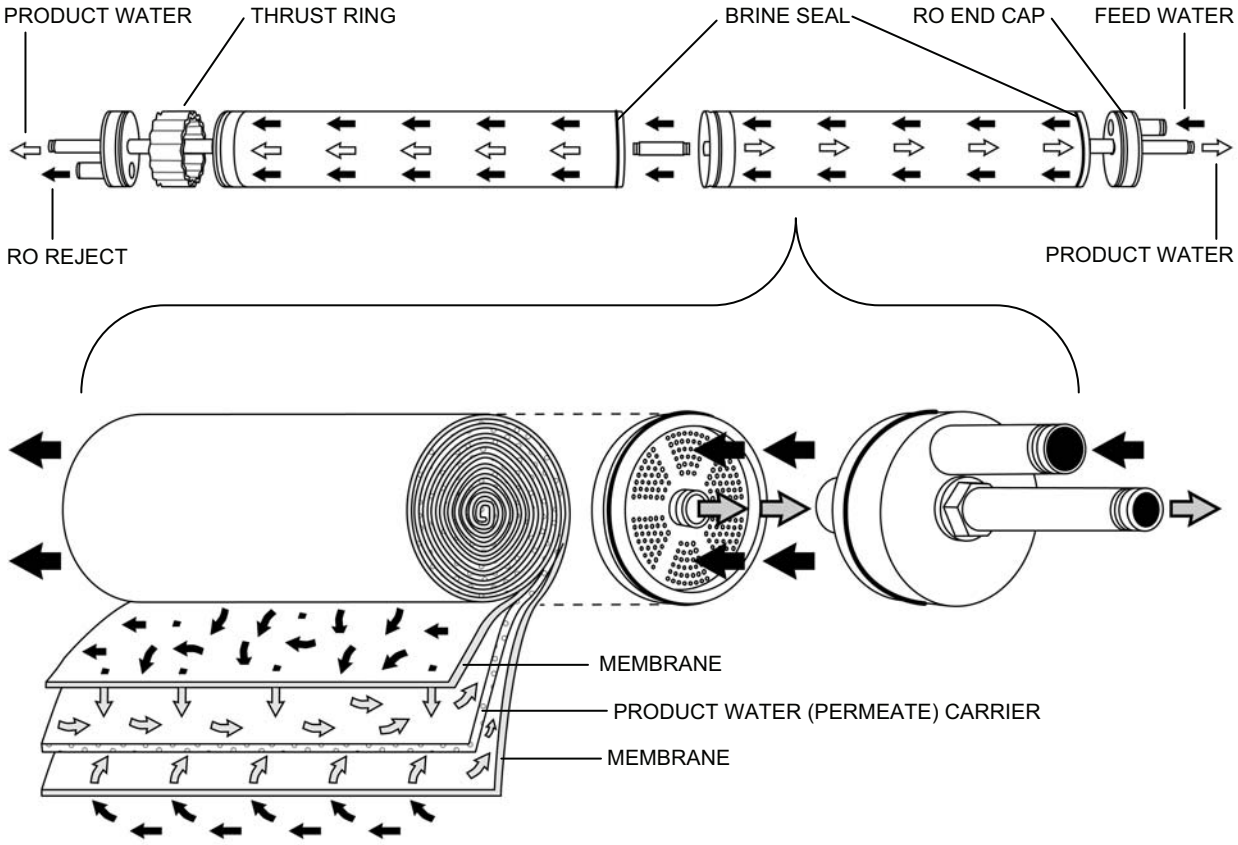

Figure 12. Reverse Osmosis Process.

Main Pressure Control Valve HCV-401 and Auxiliary Pressure Control Valve HCV-401A are used to bypass some of the reject flow around the turbocharger and directly to waste (see Figure 13). This enables the operator to reduce the flow of reject through the turbocharger and, in turn, reduce the pressure boost that the turbine delivers to the RO feed.

RO Reject Pressure Gauge PI-401 indicates the reject pressure leaving the RO vessels.

Reject Check Valve V-411 prevents back flow into the RO elements when cleaning the MF.

Reject Flow Element FE-401 measures the reject flow. RO Reject Flow Transmitter FT-401 (see Figure 5) receives the flow element output and sends flow information for display on the Operator Control Panel (OCP).

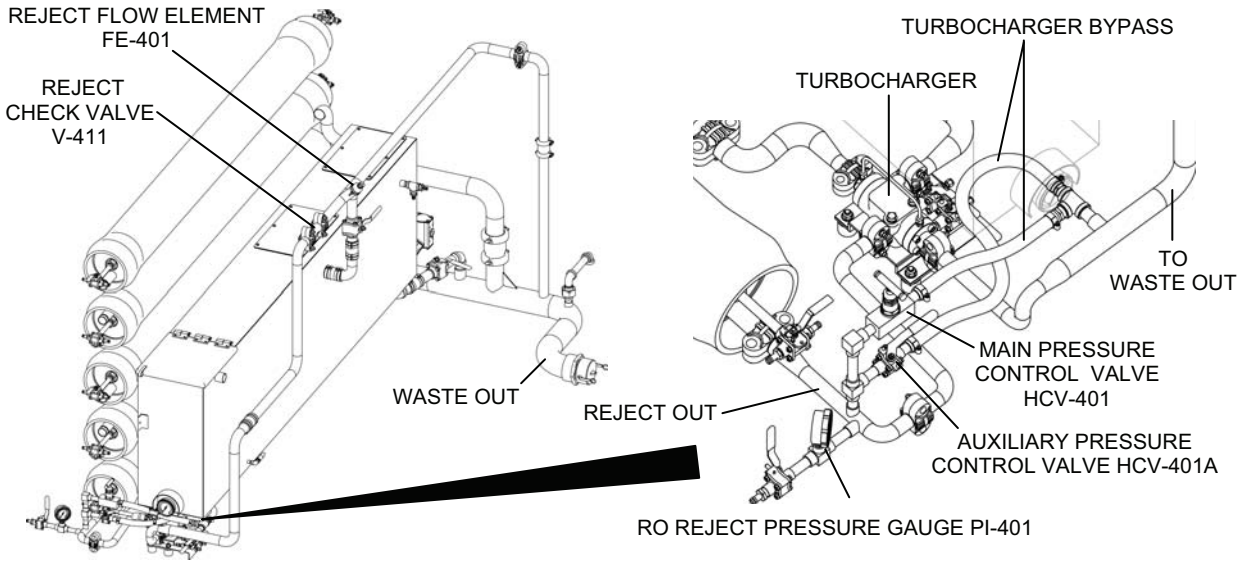

Figure 13. RO System: RO Vessels to Waste Out.

At both ends of each RO vessel, three-way valves direct product flow from each element to the product manifold or to the sample/drain hose for flow rate and conductivity measurement or for draining (see Figure 14). A Low Range Conductivity Element, CE-501A, and a High Range Conductivity Element, CE-501B, measure the product water conductivity. These are connected to the Conductivity Analyzer CIT-501, which is mounted in the instrument/solenoid panel (see Figure 5). The conductivity analyzer provides an output to the PLC which displays the measurement as mg/l total dissolve solids TDS on the OCP. This indicates how much salt is in the product water. A high alarm indicates when the TDS is greater than 1000mg/L or when the calculated % Salt Rejection is too low.

Product Pressure Gauge PI-501 reads the product pressure. Product Relief Valve RV-501 is set to relieve if pressure exceed 20 psig.

Product Vacuum Breaker VB-501 eliminates siphoning, which could pull chlorinated product water back into the RO when not in operation.
Product Flow Element FE-501 (mounted in the piping) and Product Flow Transmitter FT-501 (mounted in the instrument/solenoid panel; see Figure 5) measure product flow. This flow is displayed at the OCP.

Product Utility Valve V-511 is used for filling chemical buckets and general use.

Hypochlorite Injection Check Valve V-633 injects a measured amount of calcium hypochlorite into the product water flowing to the product water distribution system. This chemical chlorinates the product water to kill and prevent the growth of algae and bacteria in the product water. (See Chemical Injection System for further explanation.)

Product Water Check Valve V-512 prevents the flow of chlorinated product water back into the RO when not in operation.

Four 10-ft. sections of blue-banded suction hose are connected to the product water outlet to discharge product water to a distribution tank.

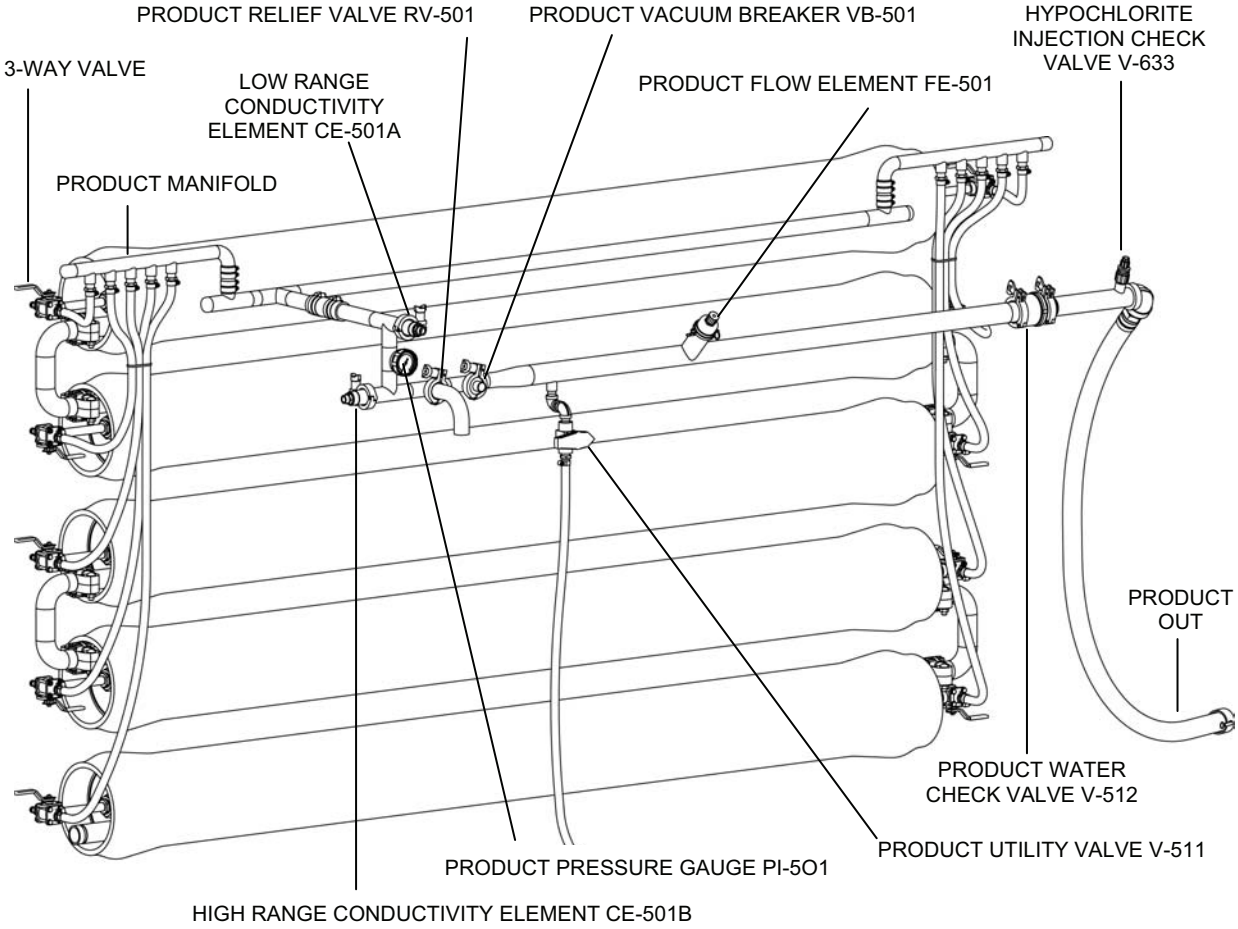

Figure 14. RO System: RO Vessels to Product Out.

AIR SYSTEM

Air System Operation Overview

The air system provides air needed to backwash and drain the MF (micro-filter) and to operate the TWPS Automatic Valves. The air system is composed of a high-pressure, three-stage compressor assembly, a two-stage outlet air filtration system, an air receiver tank, and a series of safety valves and regulating valves that are either manually or solenoid-operated. A simplified representation of the air system is illustrated in Figure 15.

The compressor supplies high pressure air, up to 1800 psig, through a two-stage air filtration system to Air System Section 1. From Air System Section 1, Air Receiver Tank R-1 is charged to about 800 to 1000 psig so that the air system has a sufficient reserve of pressurized air when needed for various TWPS operations. Pressure switch assembly PSL/PSH-901 turns the compressor on when the pressure falls below 800 psig and turns the compressor off when the pressure exceeds 950 psig. The high-pressure air is reduced to 100 psig as it flows through Air System Section 1 to Air System Section 3.

Air System Section 3 further reduces the air pressure to 15 psig that is used for draining the MF fibers before backwash and for draining the MF assembly shell during drain-down. As indicated in Figure 15, 15 psig air flows from point A in Section 3 to point B at the upper feed inlet of the MF Assembly and from point C in Section 3 through Air System Section 4 to point D at the filtrate outlet of the MF Assembly. To backwash the MF fibers, 100 psig air flows from point E in Section 3 through Air System Section 4 to point D at the filtrate outlet of the MF Assembly.

One-hundred psig air also flows from Section 3 to Air System Section 6. Any remaining oil/water is removed from the air as it flows through Section 6 to the Feed Flow Control Panel, to Filtrate Flow Control Valve V-202, and to an air manifold assembly in the Instrument/Solenoid Panel Box.

The Feed Flow Control Panel controls the operation of Filtrate Flow Control Valve V-202, which controls the flow of filtrate from the MF system to the RO feed tank. The Feed Flow Control Panel is described in more detail in WP 0011, Description and Use of Operator Controls and Indicators.

The Air Manifold Assembly is described in more detail a little later in this work package under the heading **Air Manifold Assembly**.

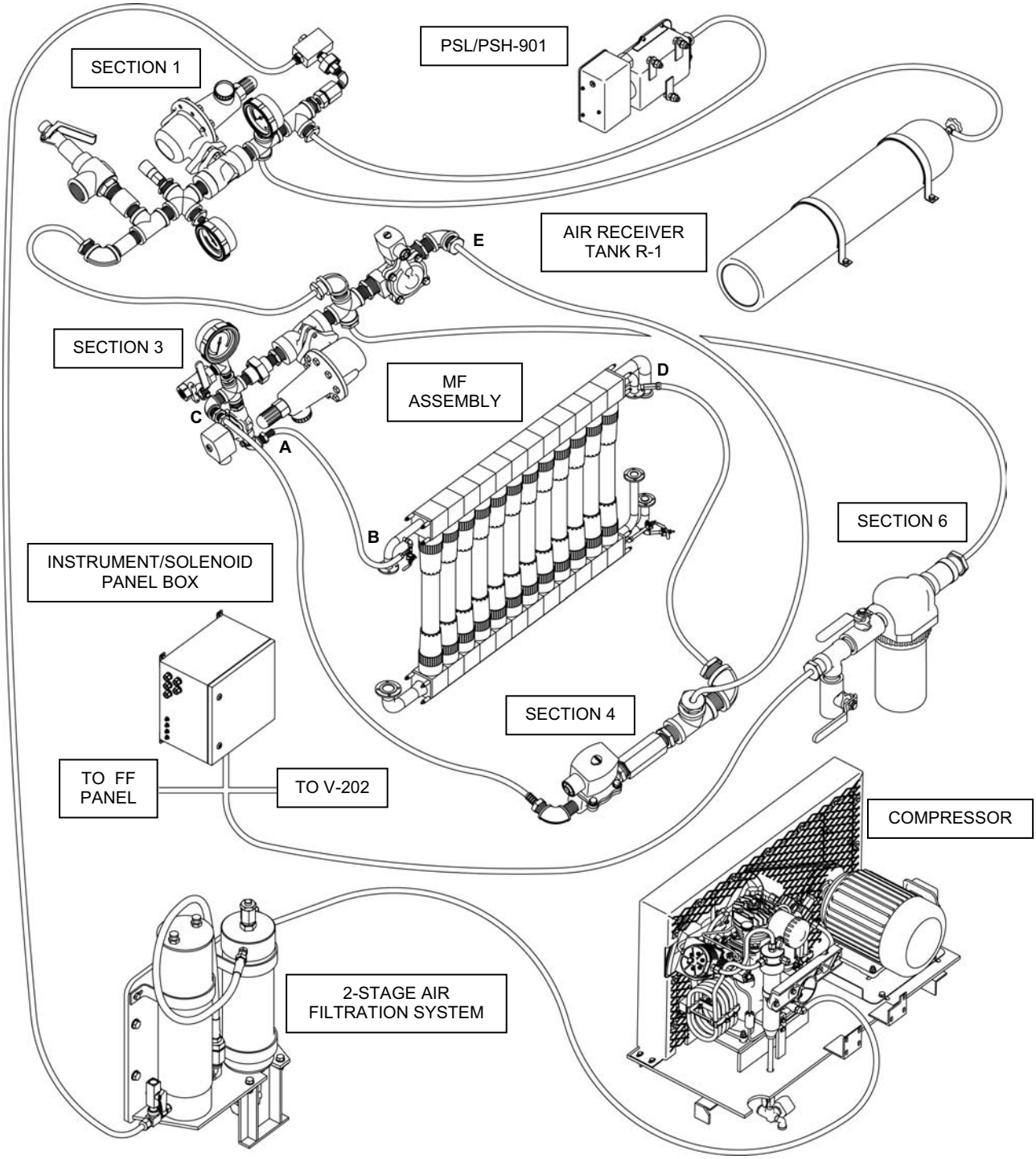

Figure 15. Air System Overview.

Air Compressor and PSL/PSH-901 Assembly

During operation the belt-driven, three-stage compressor is powered by a five horsepower, 416 vac, 60Hz motor (see Figure 16). Low-Pressure Switch PSL-901 turns the compressor motor on through the PLC (programmable logic controller) in the OCP (operator control panel) when air pressure falls below 800 psig. High-Pressure Switch PSH-901 turns the compressor motor off through the PLC when pressure exceeds 950 psig. PSL-901 and PSH-901 are parts of a single pressure switch device. A safety valve on the air compressor first stage head and on the intermediate filter protect the 1st and 2nd stage compressor valves from over pressurization. Automatic Drain Valve XV-910, which is located between the second and third stages of the compressor and which is controlled by the PLC, removes oil and water from the compressor intermediate filter at 15-minute intervals. Temperature Switch TSH-901 shuts down the compressor if the compressor third-stage temperature is too high.

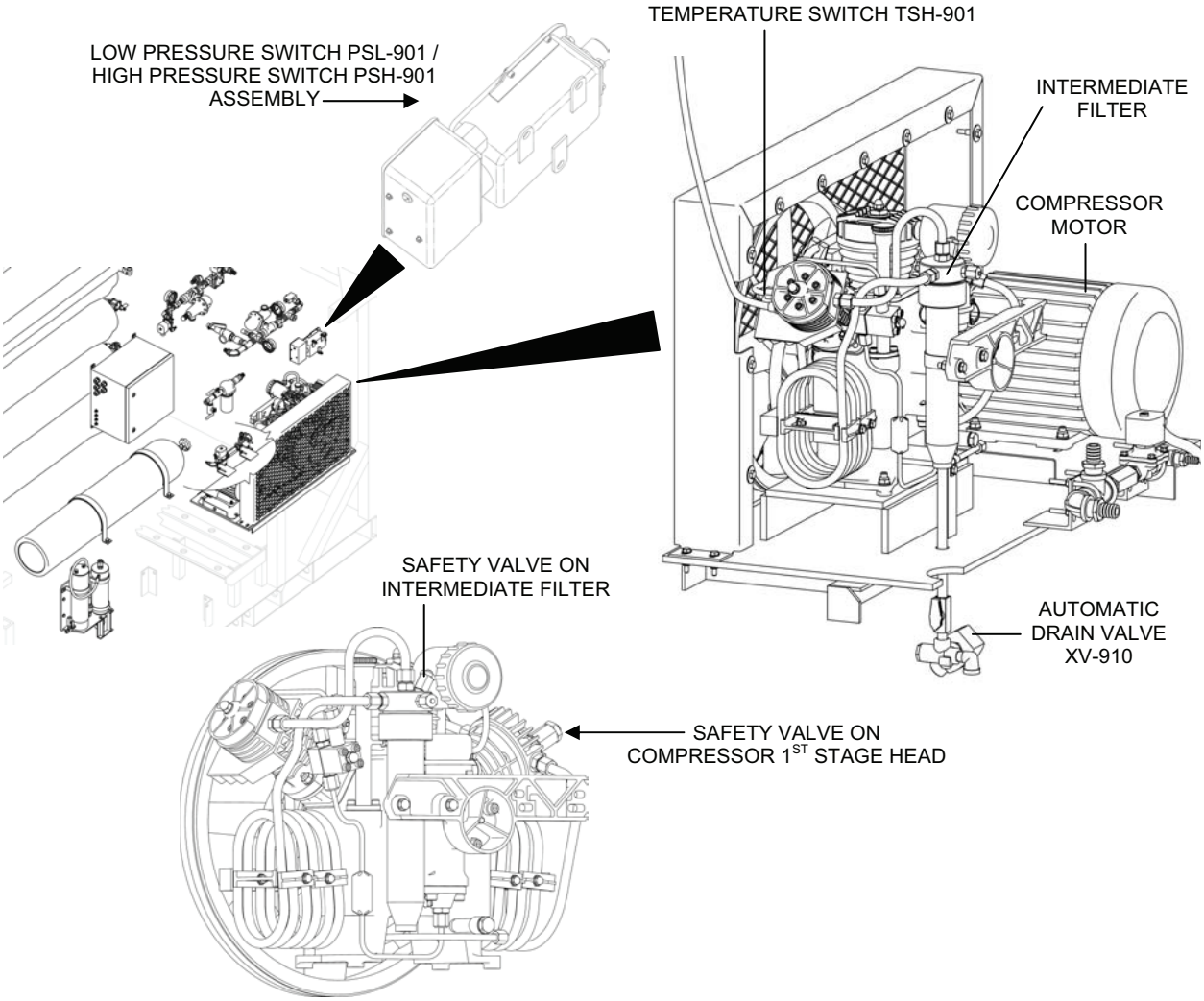

Figure 16. Air Compressor Assembly and High and Low Pressure Switch Assembly.

Two-Stage Air Filtration System

The high-pressure air, up to 1800 psig, produced by the compressor is sent to the two-stage filtration assembly. The filtration assembly consists of the following components (see Figure 17):

- Coalescer CO-1
- Drain Shutoff Valve V-902
- Automatic Drain Valve XV-911
- High Pressure Air Relief Valve RV-901
- Check Valve V-903
- Air Purification Filter AF-2
- High-Pressure Air Vent Valve V-904.

Coalescer CO-1 removes oil and water from the high-pressure air. The oil and water is automatically drained from the coalescer at 15-minute intervals by Automatic Drain Valve XV-911, which is controlled by the PLC. Relief Valve RV-901 is mounted on the coalescer and relieves air pressure if pressure in the coalescer exceeds 2200 psig. The high-pressure air then passes through a one-way Check Valve, V-903, and into Air Purification Filter AF-2, which removes additional oil and water from the air. High-Pressure Air Vent Valve V-904 is used to drain the high-pressure air from the air system for maintenance.

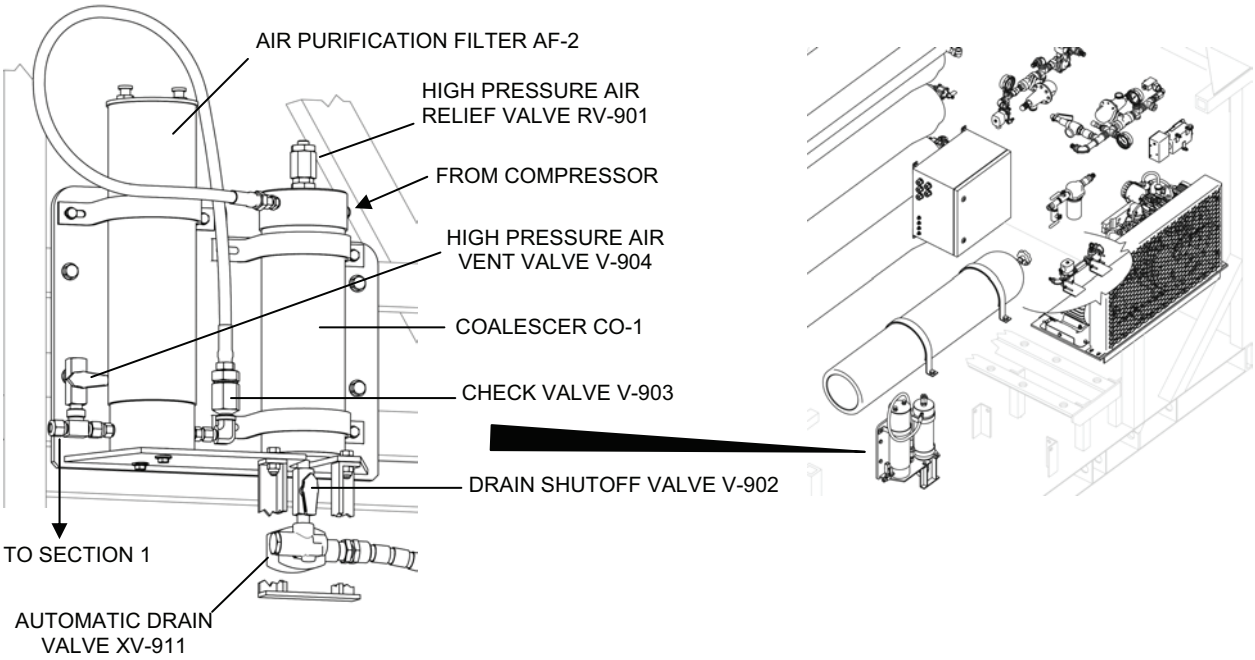

Figure 17. Coalescer CO-1 and Air Purification Filter AF-2.

Air System Section 1

Air System Section 1 contains the following main components (see Figure 18):

- Pressure Maintaining Valve V-905
- Check Valve V-906
- Pressure Gauge PI-901
- Pressure Regulating Valve PRV-901
- Pressure Gauge PI-902
- Relief Valve RV-902

Pressure Maintaining Valve V-905 maintains a pressure of approximately 1800 psig in the system between the compressor and itself to ensure proper loading of the compressor cylinder valves. One-way Check Valve V-906 maintains pressure to the input side of Pressure Regulating Valve PRV-901. Pressure Gauge PI-901 indicates the air pressure in Air Receiver Tank R-1. Pressure Regulating Valve PRV-901 reduces the high-pressure air from the air compressor to 100 psig. The reduced pressure is indicated by Pressure Gauge PI-902. Relief Valve RV-902 will relieve system pressure on the reduced-pressure side of Pressure Regulating Valve PRV-901 if the system pressure exceeds 125 psig.

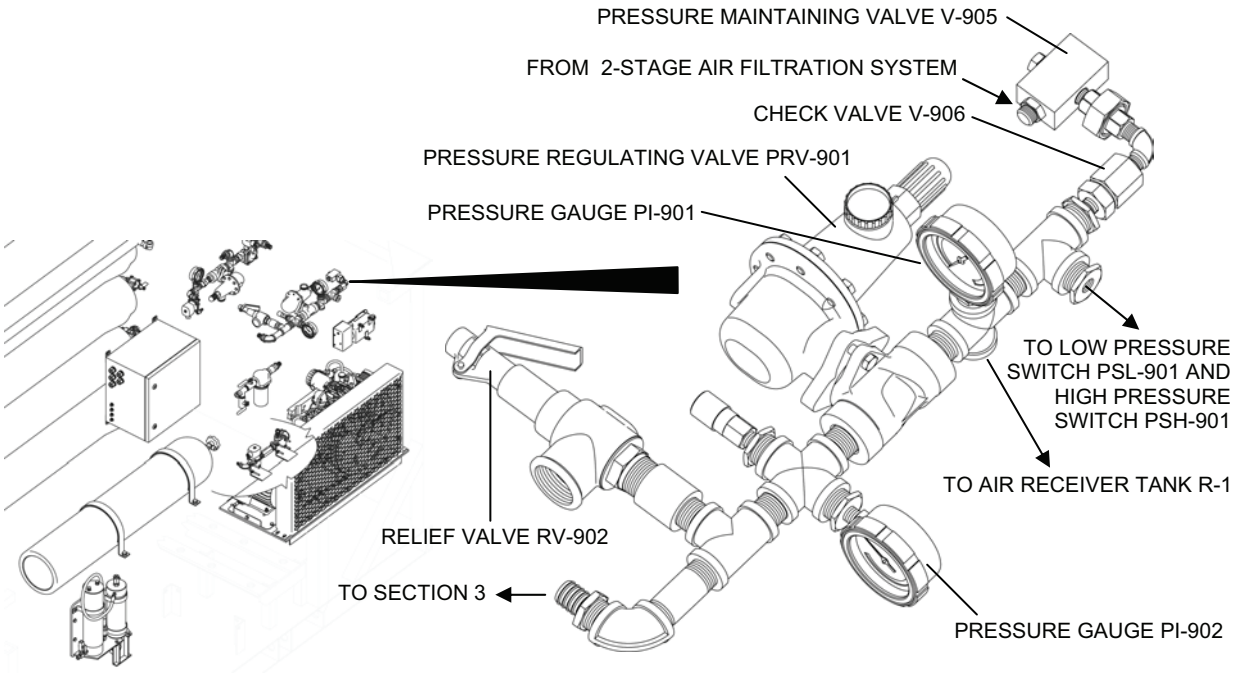

Figure 18. Air System Section 1.

Air System Section 3

Air System Section 3 contains the following components (see Figure 19):

- Pressure Regulating Valve PRV-902
- Pressure Gauge PI-903
- Low Pressure Air Vent Valve V-915
- Solenoid Valve XV-903
- Solenoid Valve XV-901

Pressure Regulating Valve PRV-902 reduces the 100 psig air to 15 psig air that is used for draining the MF fibers before backwash and for draining the MF assembly shell during drain-down. The reduced pressure is indicated by Pressure Gauge PI-903. Low Pressure Air Vent Valve V-915 is opened manually to vent air when it is necessary to adjust pressure PRV-902 to provide a 15 psig reading at PI-903. Solenoid Valve XV-903 is activated by the PLC to control the flow of 15 psig air to the MF feed inlet for draining the MF assembly shell during drain-down. Solenoid Valve XV-901 is activated by the PLC to control the flow of 100 psig air through Air System Section 4 to the MF filtrate outlet to backwash the MF fibers.

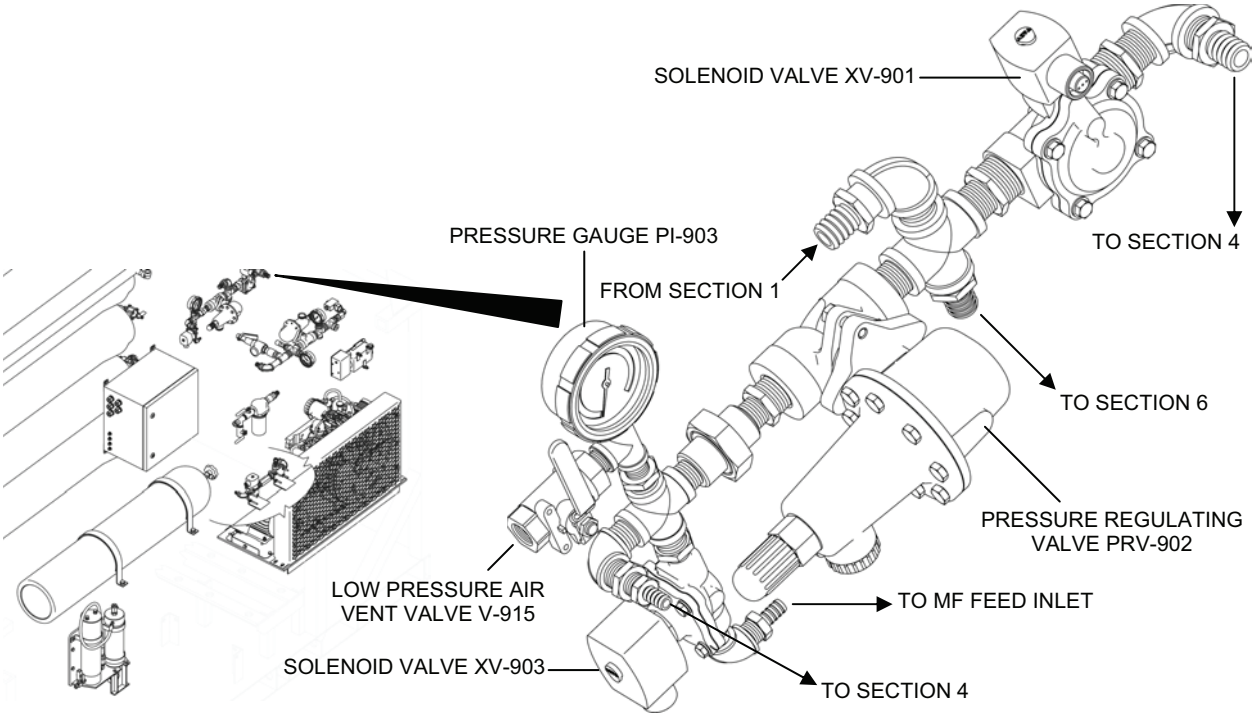

Figure 19. Air System Section 3.

Air System Section 4

Air System Section 4 contains the following components (see Figure 20):

- Solenoid Valve XV-902
- Check Valve V-908

Solenoid Valve XV-902 is activated by the PLC to control the flow of 15 psig air to the MF filtrate outlet for draining the MF fibers before backwash. One-way Check Valve V-908 prevents 100 psig backwash air from flowing through Solenoid Valve XV-902 and the 15 psig air system.

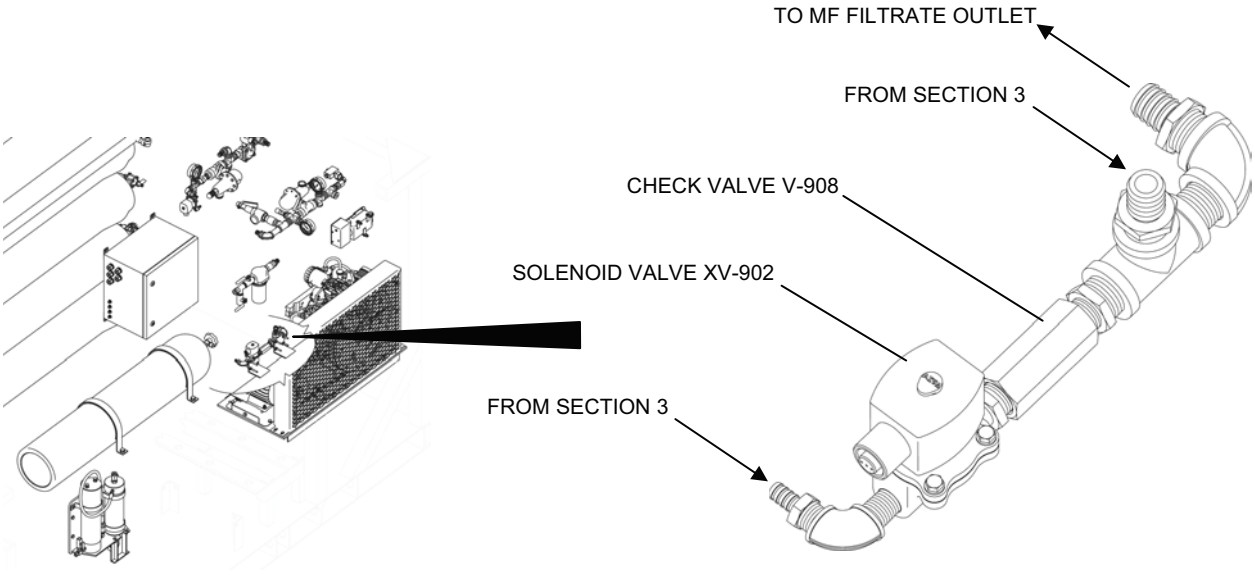

Figure 20. Air System Section 4.

Air System Section 6

Air System Section 6 contains the following components (see Figure 21):

- Coalescer CO-2
- Low Pressure Air Shut-Off Valve V-909
- Low Pressure Air Vent Valve V-910

Oil/Water Coalescer CO-2 removes any remaining oil/water from the 100 psig air before it reaches the Feed Flow Control Panel, Filtrate Flow Control Valve V-202, and the Air Manifold Assembly. Low Pressure Air Shut-Off Valve V-909 is used to shut off the 100 psig air so that maintenance can be performed on the Feed Flow Control Panel, Filtrate Flow Control Valve V-202, or the Air Manifold Assembly. Low Pressure Air Vent Valve is used to V-910 bleed the air from the air system.

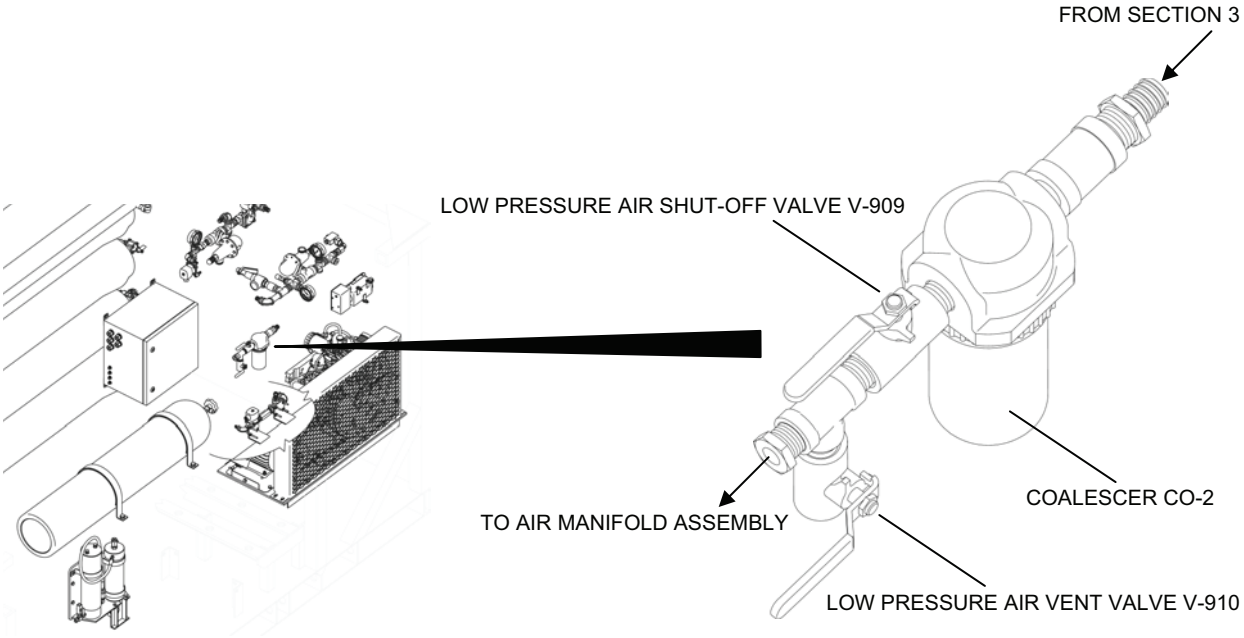

Figure 21. Air System Section 6.

Air Manifold Assembly

The Air Manifold Assembly is located in the Instrument/Solenoid Panel Box. The manifold is comprised of six solenoid valves that are activated by the PLC to operate automatic valves in the TWPS. The solenoid valves and the automatic valves that they control are as follows (see Figure 22):

- Solenoid Valve XV-904 controls 100 psig air to MF Main Feed Valve V-111
- Solenoid Valve XV-905 controls 100 psig air to MF Upper Feed Inlet Valve V-112
- Solenoid Valve VX-906 controls 100 psig air to MF Lower Feed Inlet Valve V-113
- Solenoid Valve XV-907 controls 100 psig air to MF Upper Shell Outlet Valve V-401
- Solenoid Valve XV-908 controls 100 psig air to MF Lower Shell Outlet Valve V-402
- Solenoid Valve XV-909 controls 100 psig air to MF Upper Filtrate Outlet Valve V-201

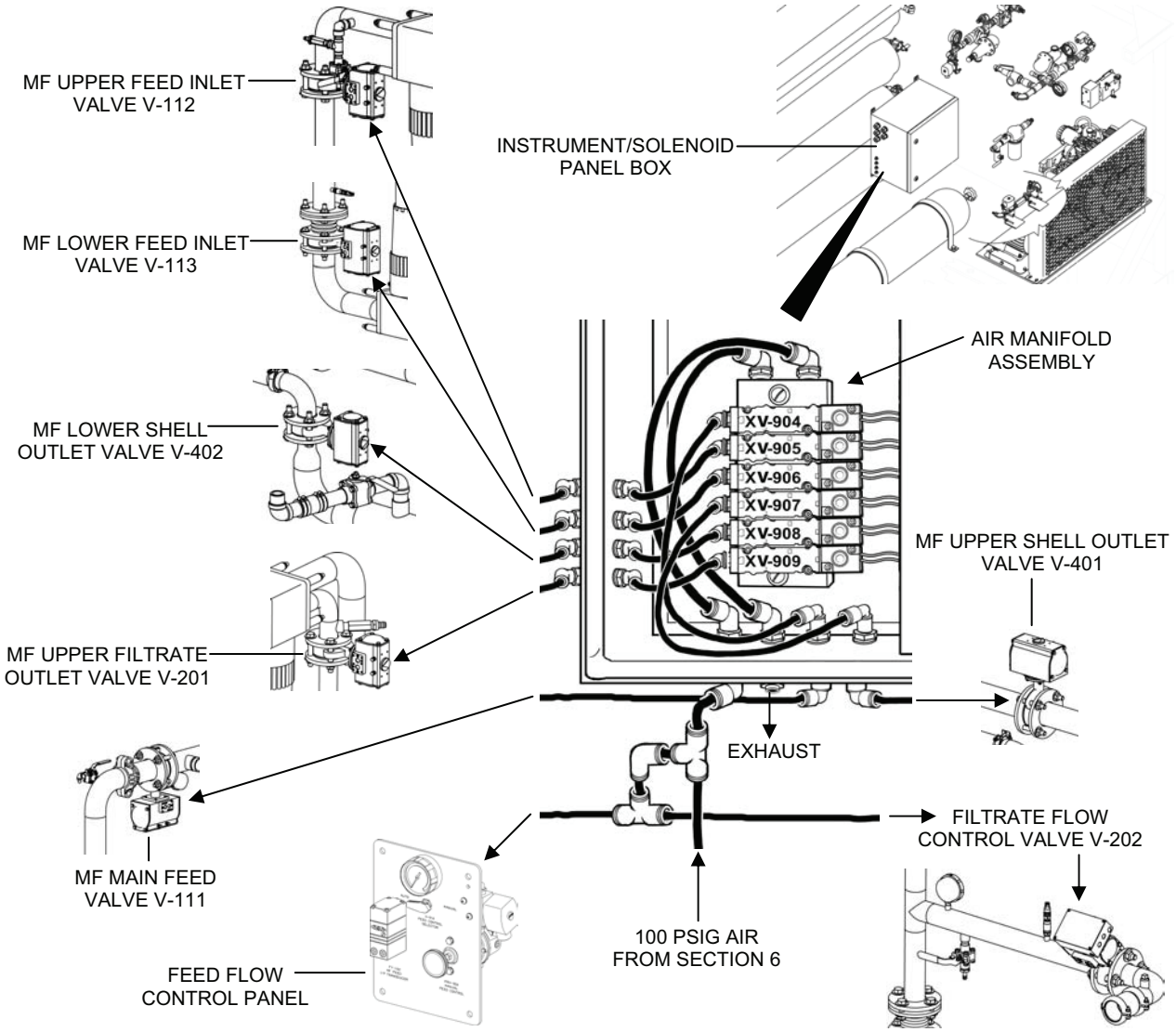

Figure 22. Air Manifold Assembly.

CHEMICAL INJECTION SYSTEM

The chemical injection system is composed of three independent chemical systems: the sodium bisulfite chemical injection system, the antiscalant chemical injection system, and the calcium hypochlorite chemical injection system.

The sodium bisulfite chemical injection system is used only if the raw water source is chlorinated water. Chlorinated water will rapidly destroy the fibers in the micro-filter elements and the membranes in the reverse osmosis elements. Sodium bisulfite is injected into chlorinated raw water before the water is discharged into the MF Feed Tank to neutralize the chlorine.

The antiscalant chemical injection system inhibits salt scale formation on the RO membranes.

The calcium hypochlorite chemical injection system prevents microbial growth and contamination in the product water.

Each of the three chemical systems consists of (see Figure 23):

- Chemical Injection Pump CP-1, CP-2, or CP-3
- Four Function Valve V-612, V-622, or V-632
- Refillable five gallon bucket to hold the chemical solution
- Foot Valve (V-611, V-621, or V-631), strainer, and ceramic weight
- 3/8 in. suction tubing
- 3/8 in. discharge tubing
- 1/4 in. return/priming tubing.
- Injection Check Valve V-613, V-623, or V-633

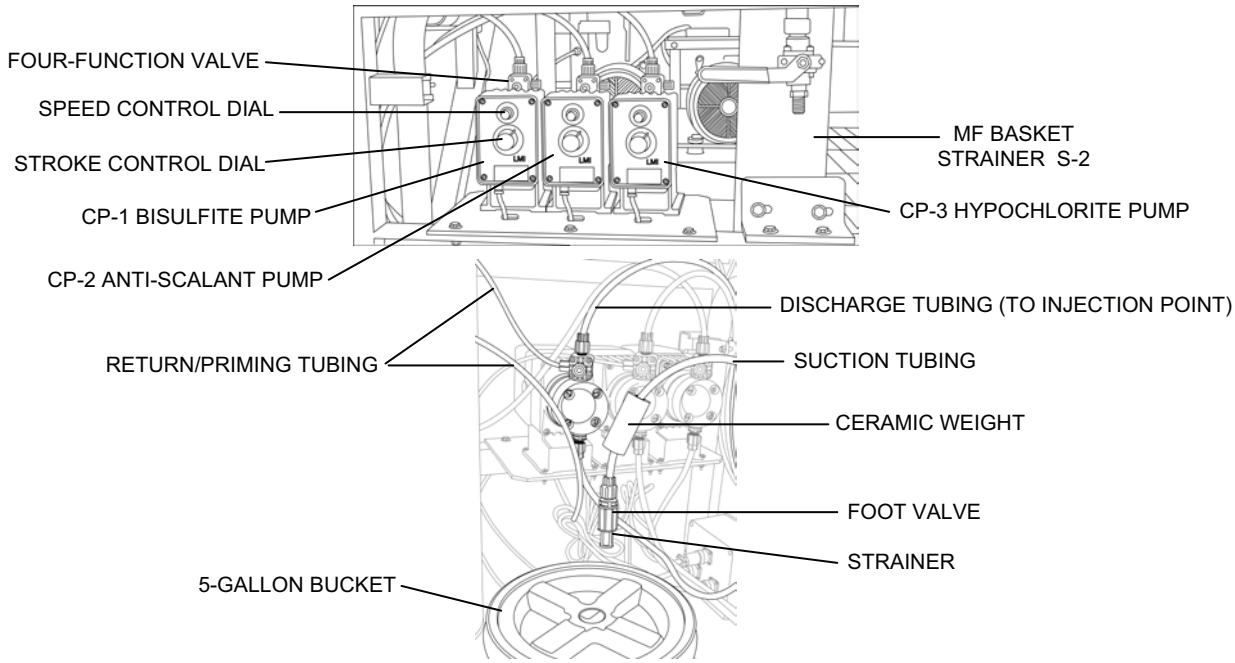

Figure 23. Chemical Injection System Components.

The refillable five-gallon buckets have a different color cover for each of the three chemical systems to help ensure that the right chemical is used with the right system,

1. Sodium bisulfite chemical injection system has a refillable five gallon bucket with BLUE COVER
2. Antiscalant chemical injection system has a refillable five gallon bucket with YELLOW COVER
3. Calcium Hypochlorite chemical injection system; refillable five gallon bucket with RED COVER

The three chemical pumps are mounted next to the MF Basket Strainer S-2. The operation of all three pumps is the same. Only the type of chemical pumped, rate of injection and location of injection differs. The sodium bisulfite and antiscalant pumps are set to pump approximately 4 gallons every 10 hours of operation. This allows refilling of these chemical buckets at the beginning of each shift. The calcium hypochlorite pump is set according to the product flow rate and the desired amount of free chlorine.

During process operation, chemical from the refillable bucket is drawn up the suction line to the chemical pump. From the suction side of the pump the chemical passes to the discharge side through the four-function valve. The four-function valve prevents anti-siphoning of the chemical when the pump is not running, allows for priming of the discharge line if the prime has been lost during maintenance or shutdown, and allows for draining of the discharge line for maintenance or disassembly. From the four-function valve the chemical is pumped into the discharge line and then injected into the system by the injection check valve. The purpose of the check valve is to prevent water in the piping from entering the injection system.

Sodium bisulfite is injected into Adaptor A-11 (see Figure 24), which contains a static mixer. The static mixer uses non-moving baffles to thoroughly mix the sodium bisulfite solution into the raw water stream before the raw water is discharged into the MF feed tank.

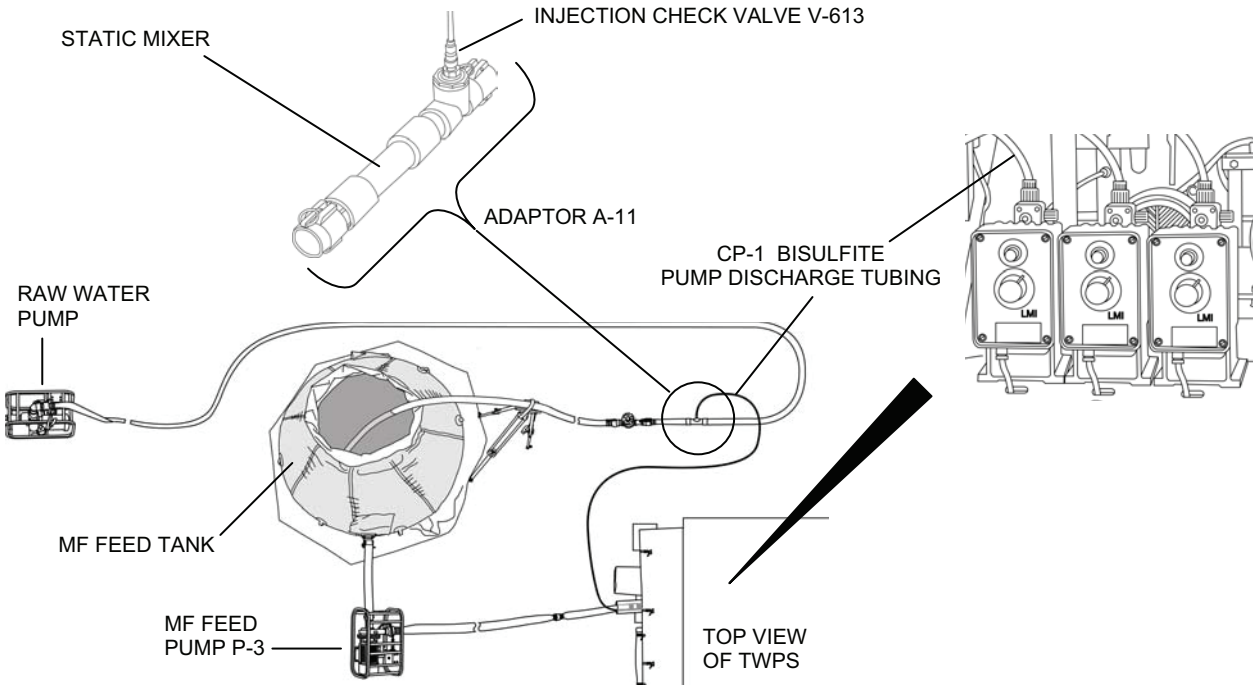

Figure 24. Adaptor A-11 Sodium Bisulfite Injection Point.

Antiscalant is injected into the RO feed water just after if discharges from the RO feed pump and before it reaches the HP pumps (see Figure 9).

Calcium hypochlorite is injected into the product water just after Check Valve V-512 and before the product water enters the distribution tanks (see Figure 14). When the NBC System is deployed, the calcium hypochlorite is injected in the product water after it discharges from the NBC tank and before the product water enters the distribution tanks (see Figure 26). This is accomplished by disconnecting the normal operation discharge tube and connecting the NBC discharge tube, that is then connected to the outlet of the NBC filter.

STANDARD PRODUCT WATER DISTRIBUTION SYSTEM

The standard distribution system stores potable product water in two 3000-gallon self-supporting fabric Storage Tanks T-3 and T-4 (see Figure 25). The tanks are connected together using Adapter A-07 and one two-in. diameter, five-ft. long suction hose at the lower output side of the storage tanks. A two-in. diameter, five-ft. suction hose connects from the adapter to Electric Motor-Driven Pump P-7. Product water is delivered to the inlet of one of the tanks through the 1½-in. diameter suction hoses connected to the tank by Adaptor A-15. Pump P-7 draws the product water from the storage tank outlets and discharges it through Adaptor A-08 and two 2-in. diameter, 65-ft. long discharge hoses to two distribution Nozzles V-523A and V523B. A 5/8-in. x 50-ft. Auxiliary Hose and Valve V-522 can be connected to pump outlet Adapter A-08 in place of one of the distribution hoses to provide water back to the TWPS for MF and RO cleaning and general purpose potable water use. The distribution system provides up to 125 gpm total distribution capacity through the two distribution nozzles. The distribution nozzles are flushed for 30 seconds at full flow prior to distributing water. The raw water pumps and the distribution pump are interchangeable by changing the pump suction fittings.

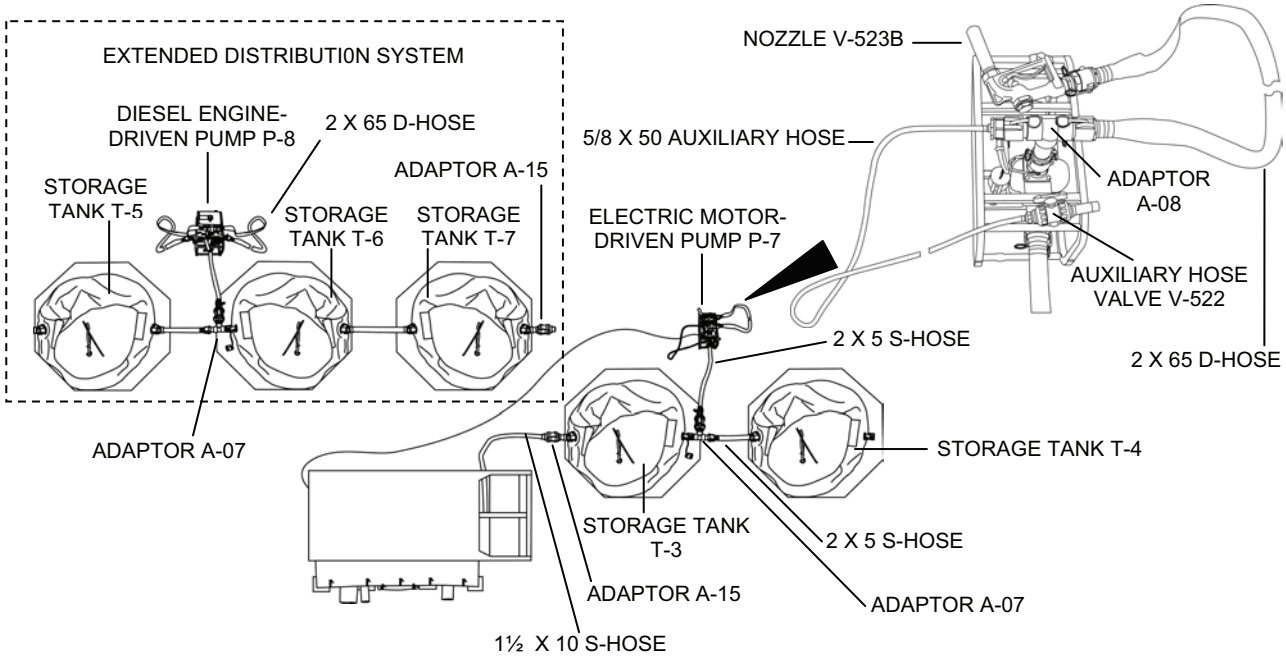

Figure 25. Product Water and Extended Product Water Distribution Systems.

EXTENDED PRODUCT WATER DISTRIBUTION SYSTEM (A-TWPS ONLY)

The extended product water distribution system provides an additional 9000 gallons of product water storage with the use of three additional 3000-gallon Storage Tanks T-5, T-6 and T-7 (see Figure 25). The tanks are connected together using 2-in. diameter, 5-ft. long, blue-banded hoses. Adapter A-07 is installed in line between two of the three tanks. A 2-in. diameter, 5-ft., blue-banded suction hose connects from Adaptor A-07 to Diesel Engine-Driven Pump P-8. Product water is delivered to the inlet of one of the tanks through the 1½-in. diameter suction hoses that are disconnected from the standard distribution system storage tank and connected to an extended distribution system storage tank by Adaptor A-15. Pump P-8 draws the product water from the storage tank outlets and discharges it through Adaptor A-08 and two 2-in. diameter, 65-ft. long discharge hoses to two Distribution Nozzles V-523C and V-523D. The extended product water distribution system, combined with the standard product water distribution system, provides up to 250 gpm total distribution capacity through the four distribution nozzles.

NUCLEAR, BIOLOGICAL, CHEMICAL (NBC) SYSTEM

The NBC system is deployed as a final product water treatment step when the water source is contaminated with nuclear, biological, or chemical warfare agents (see Figure 26). The RO system will remove most, if not all, of the NBC agent material. The NBC system provides final removal and added assurance that all NBC agents have been removed from the water. The system consists of an NBC filter tank and media consisting of ion exchange resin and carbon. When used, it is removed from the TWPS skid and deployed near the distribution tanks. The media is loaded after the filter tank is in place. Product water is directed to the top of the filter. The water flows down through the media, out the bottom of the filter, and to the distribution tanks. The calcium hypochlorite is injected in the product water after it discharges from the NBC filter outlet. The injector is located in the filter outlet pipe. After one hundred hours of water production, the resin and carbon will be exhausted. The tank is disconnected and left for later disposal. A new tank, resin and carbon are used to continue the mission.

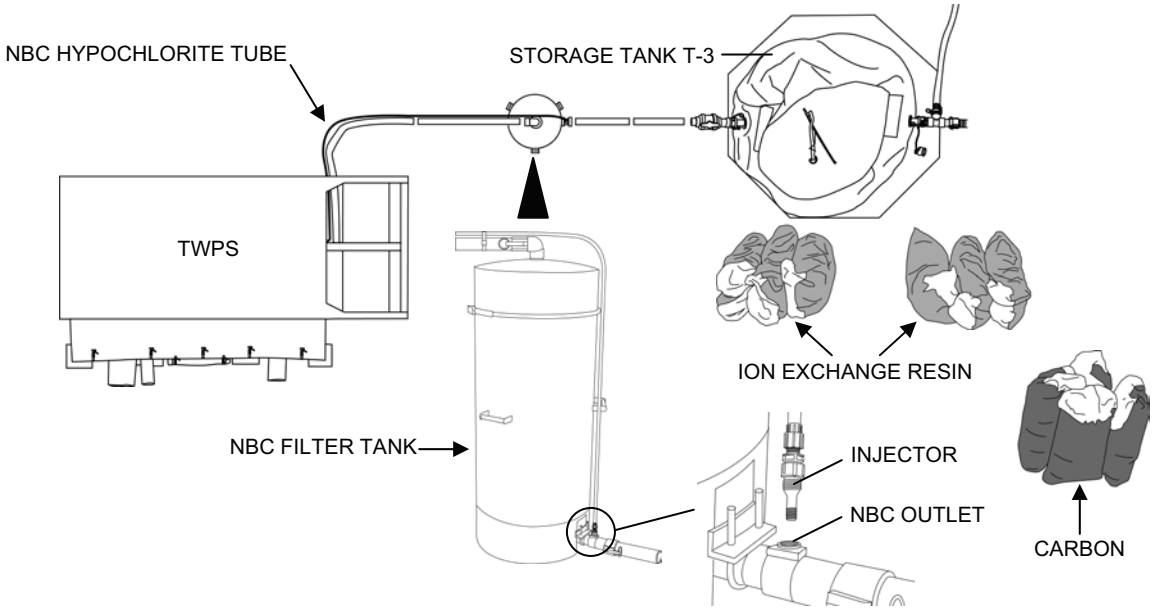

Figure 26. NBC System.

OPERATING CONTROLS

The Operating Controls include the Operator Control Panel (OCP), the Feed Flow (FF) Control Panel, the Programmable Logic Controller (PLC) (see Figure 27). It also includes several indicators and controls off of the OCP that require occasional adjustment and monitoring for manual operation. The OCP provides all of the push buttons, switches, alarm lights and displays needed for operator control and monitoring of the system. The Feed Flow Control Panel controls the operation of Flow Control Valve V-202, which controls the flow of filtrate from the MF system to the RO feed tank. The PLC provides automated control after operator startup and in response to operator switch selections. Indicators and controls throughout the TWPS MF and RO systems provide the operator with local indications of system conditions and manual controls for certain operating functions of the TWPS.

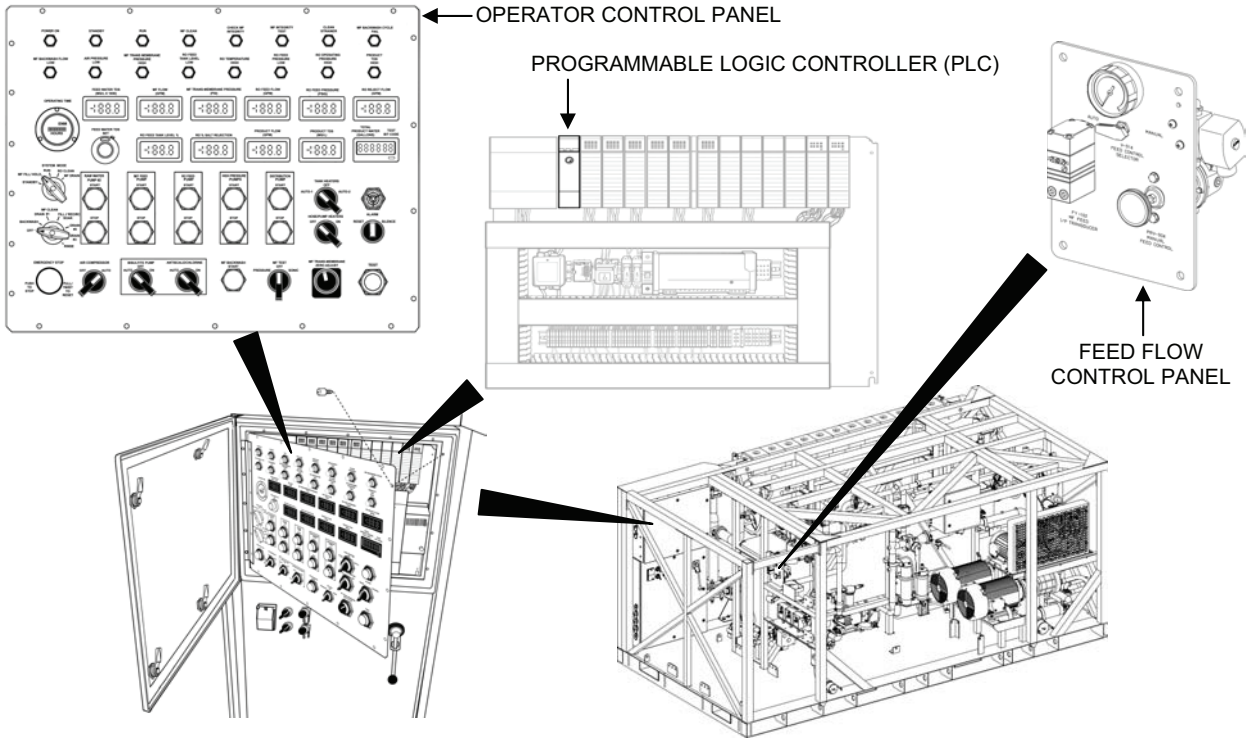

Figure 27. Operator Control Panel and Feed Flow Control Panel.

POWER DISTRIBUTION SYSTEM

The Power Distribution System distributes electrical power to components within the TWPS and to the pumps deployed off of the skid during operation. The power distribution system includes the following major components:

- **60 kW TQG** (Tactical Quiet Generator) or (for the MC-TWPS) alternative 416 Volt AC, 3-phase power source. The TQG is provided with the A-TWPS. The MC-TWPS comes without the TQG.
- **Power distribution panel.** The power distribution panel is located below the operator control panel and behind the lower panel door (see Figure 28). It contains the circuit breakers and motor starters needed to provide power to all of the electrical devices included in the TWPS.

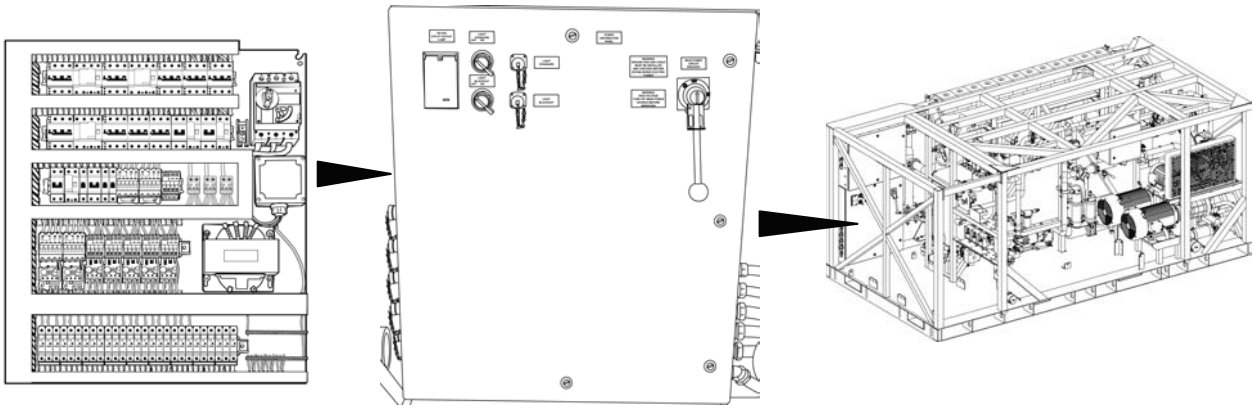

Figure 28. Power Distribution Panel.

CLEANING AND PRESERVATION OPERATIONS

The MF element fibers require periodic chemical cleaning to remove dirt and organic material that is not fully removed by the backwash. The need to clean is indicated by the “Clean MF” alarm. The MF fibers are always cleaned first with the low pH citric acid and then with the high pH detergent membrane cleaner. The RO feed tank is used to mix and store the cleaning solutions and the RO feed pump is used to circulate the solutions. Heaters mounted to the RO feed tank heat the cleaning solutions to improve their effectiveness. Cleaning valves direct the cleaning solution as required for mixing, circulation and pump out to waste. The 6-in., red-banded waste out hose is removed and replaced with 2 x 10 cleaning waste hoses that are normally connected to a cleaning waste storage tank. Adaptor A-12 with Cleaning Waste Outlet Valve V-705 is connected to the end of the cleaning waste hoses (see Figure 29). A 1500-gallon cleaning waste storage tank holds the cleaning and rinse wastes. Connected to both sides of the waste tank is Adaptor A-16 with Shut-Off Valve V-706.

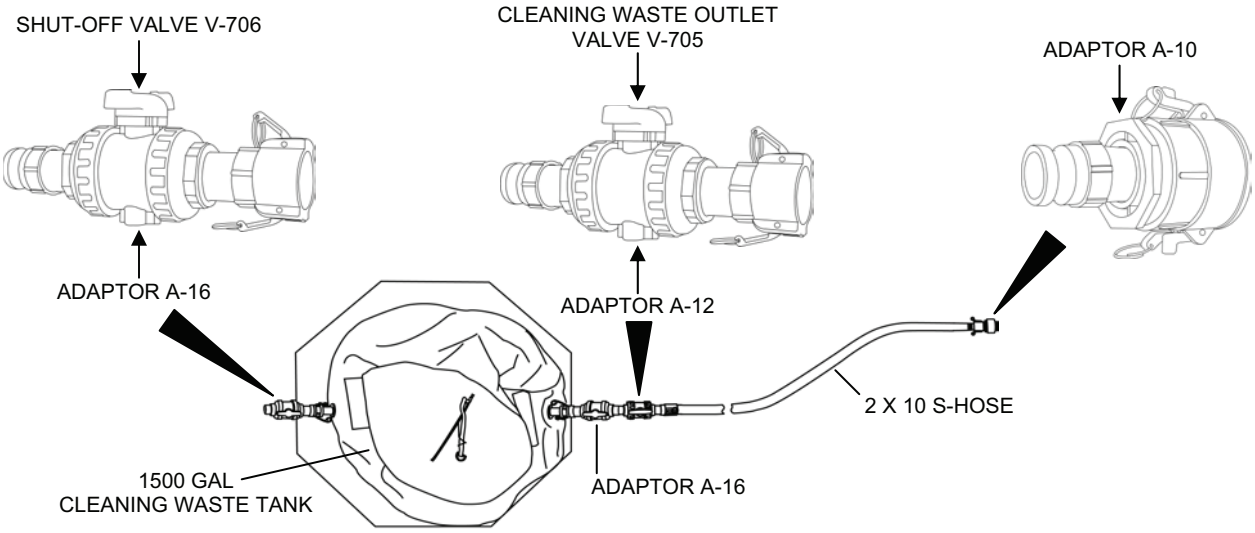

Figure 29. Cleaning Waste Storage Tank Set-Up.

Cleaning of the MF is summarized below (see Figure 30):

1. Install 2 x 10, red-banded, cleaning waste hoses with Adaptor A-10 Cleaning Waste Outlet Valve V-705 closed (see Figure 29) and cleaning waste tank with Adaptors A-16 shut-off valves V-706 closed.
2. Mixing the cleaning solution.
   a. The RO feed tank is partially filled with product water.
   b. HP Pump Feed Valve V-212 is closed and Clean Mixing Valve V-703 is opened.
   c. With the RO feed pump on, the water circulates from the RO tank and back in again through the mixing valve. The membrane cleaner is slowly added through the open tank cover and mixes with the water as the solution circulates.
3. Circulation and rinse.
   a. Clean Mixing Valve V-703 is closed. MF Clean Feed Valve V-704 and Clean Return Valve V-702 are opened. This directs the circulation through the MF assembly and back through the waste out piping and the Clean Return Valve V-702 to the RO feed tank.
   b. When cleaning is complete, Cleaning Waste Outlet Valve V-705 and the Shut-Off Valve V-706 next to V-705 are opened to direct the cleaning waste to the cleaning waste tank.
   c. The element fibers are rinsed with product water that is added to the RO feed tank. The rinse water is directed to the cleaning waste tank.

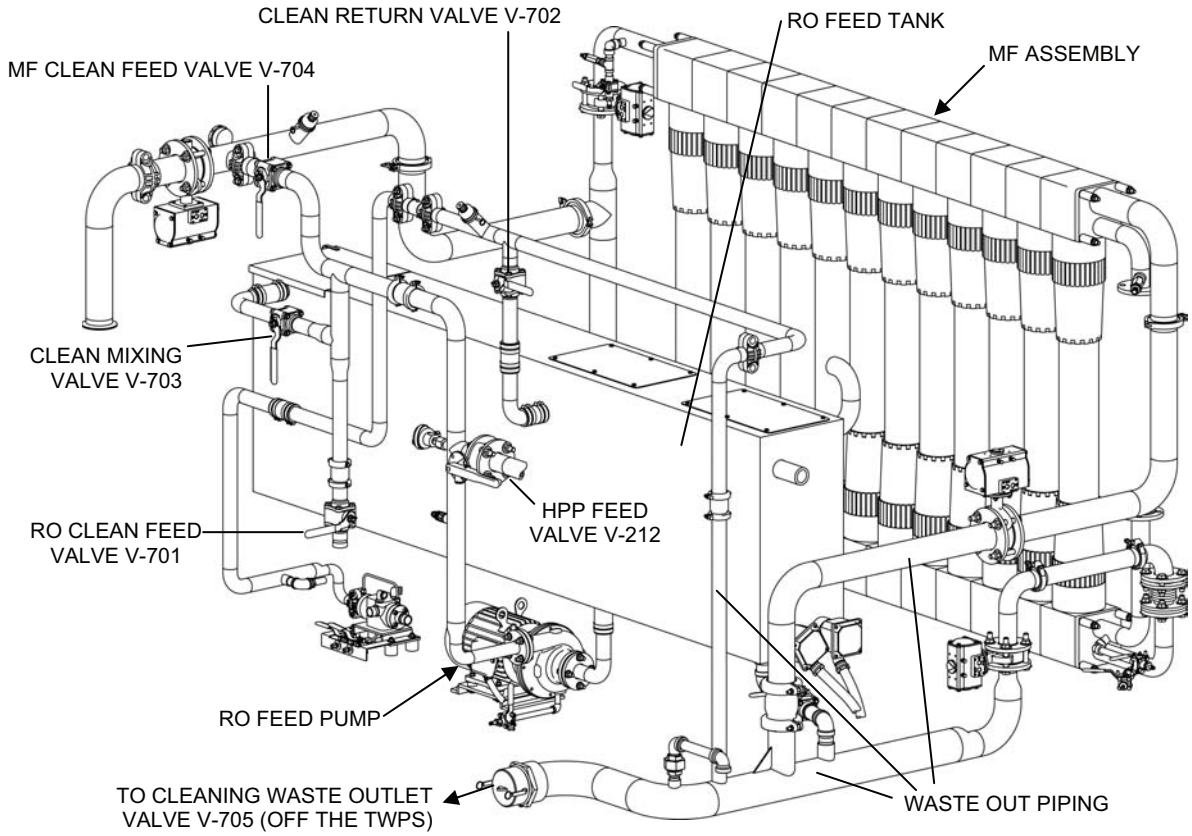

Figure 30. MF Cleaning Operation.

The RO membranes do not require regular cleaning. When required, cleaning is similar to that for the MF. For RO cleaning, the RO Clean Feed Valve V-701 is opened to direct the circulation through the RO.

When shut down for more than 54 hours, both the MF fibers and RO membranes require preservation to avoid growth of biological material on the fiber and membrane surfaces. The MF fibers are preserved with caustic (or the high pH cleaning solution which includes detergent and the caustic). The RO membranes are preserved with sodium bisulfite, which is either flushed through the RO elements, or circulated as a cleaning solution. These solutions are drained, but not flushed.

COLD WEATHER MODULE

The Cold Weather Module is employed during cold weather operations (temperatures below 32°F to -25°F) to prevent water in the TWPS from freezing. The Cold Weather Module is provided with the A-TWPS or as an extended capability module for the MC-TWPS and includes the following main components (see Figure 31) (see WP 0002 for a complete listing and illustrations of all the major parts):

- Diesel-fired forced hot air space heater provides heat to the enclosed TWPS.
- General purpose transformer provides power for the electrical components of the heater.
- Motor-driven raw water pump heating collars wrap around the pumps that are deployed off the TWPS skid and keep the water in the pump from freezing.
- Insulating pump covers cover the pump skids that are deployed off the TWPS skid and insulate the pumps and motors/diesel engines from the elements.
- Non-floating ice intake strainer. This strainer is used for ice hole operation in place of the floating inlet strainer.
- Ice hole auger. Used to drill a hole in the ice
- Insulating platforms are placed under each pump skid that is deployed off the TWPS skid.
- Electric hose heating blankets cover each hose that is deployed off the TWPS skid and prevent the water in the hoses from freezing.
- A winter cover is provided as an extended capability module for the MC-TWPS. The cover encloses the TWPS skid and protects the TWPS from the elements. The A-TWPS comes supplied with a fabric wall that encloses the front of the flat rack containing the TWPS skid.

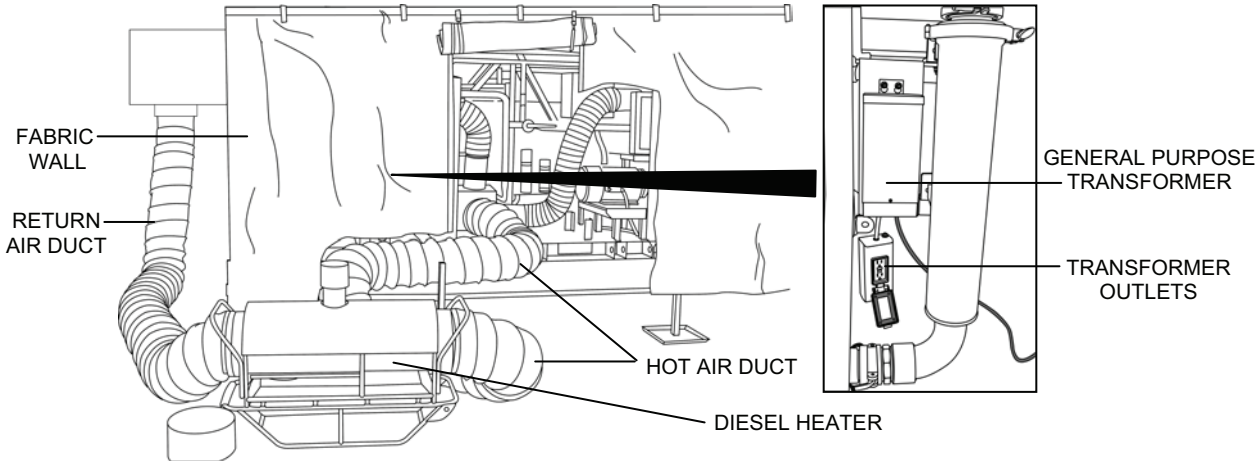

Figure 31. A-TWPS Cold Weather Diesel Heater Deployment.

END OF WORK PACKAGE

CHAPTER 2

FIELD TROUBLESHOOTING

FOR

TACTICAL WATER PURIFICATION SYSTEM (TWPS)

TACTICAL WATER PURIFICATION SYSTEM (TWPS) TROUBLESHOOTING PROCEDURES FIELD TROUBLESHOOTING PROCEDURES – TACTICAL WATER PURIFICATION SYSTEM (TWPS)

0004 00

This work package covers malfunctions of the various TWPS systems including the related electrical control provided by the OCP and the power provided by the PDP. The malfunctions and troubleshooting procedures are presented in tables as listed.

RAW WATER SYSTEM MALFUNCTIONS

TABLE 1: RAW WATER SYSTEM TROUBLESHOOTING

TABLE 2: DIESEL ENGINE TROUBLESHOOTING

MF SYSTEM MALFUNCTIONS

TABLE 3: MF FEED PUMP P-3 TROUBLESHOOTING

TABLE 4: AUTOMATIC VALVES, AIR SOLENOID VALVES TROUBLESHOOTING

TABLE 5: GENERAL MF SYSTEM TROUBLESHOOTING

TABLE 6: FEED FLOW CONTROL PANEL TROUBLESHOOTING

RO SYSTEM MALFUNCTIONS

TABLE 7: GENERAL RO SYSTEM TROUBLESHOOTING

TABLE 8: HIGH PRESSURE PUMP, TURBOCHARGER TROUBLESHOOTING

AIR SYSTEM MALFUNCTIONS

TABLE 9: GENERAL AIR SYSTEM TROUBLESHOOTING

TABLE 10: AIR COMPRESSOR TROUBLESHOOTING

CHEMICAL SYSTEM MALFUNCTIONS

TABLE 11: CHEMICAL SYSTEM TROUBLESHOOTING

PRODUCT WATER SYSTEM MALFUNCTIONS

TABLE 12: PRODUCT WATER SYSTEM TROUBLESHOOTING

COLD WEATHER SYSTEM MALFUNCTIONS

TABLE 13: COLD WEATHER SYSTEM TROUBLESHOOTING

TACTICAL WATER PURIFICATION SYSTEM (TWPS) TROUBLESHOOTING PROCEDURES FIELD TROUBLESHOOTING PROCEDURES – TACTICAL WATER PURIFICATION SYSTEM (TWPS)

THIS SECTION COVERS:
Raw Water System

INITIAL SETUP:
TWPS Set Up
Maintenance Level
Unit

RAW WATER SYSTEM MALFUNCTIONS

Table 1. Raw Water System Troubleshooting.

ITEM	MALFUNCTION	POSSIBLE CAUSES	CORRECTIVE ACTION
1	Raw Water Pump P1 or P2 (if deployed as the only raw water pump) is rotating but is not pumping water.	Startup:	
		Missing suction hose coupling gasket.	Check all couplings that are out of water for coupling gasket. Install gasket in any couplings that are missing a gasket.
		Loss of prime.	Open vent valve until primed again. Add water if needed.
		During operation:	
		Water intake out of water and sucking air.	Reset intake under water.
		Clogged floating inlet strainer.	Pull in, clean, redeploy.
		Pump (suction lift) is more than 23 feet above the raw water.	Reconfigure pump closer to water source.
		Check valve not closing tightly.	Stop engine. Remove suction hose and Adaptor A-01 from pump. Inspect check valve V-101 valve seat. Remove any material preventing tight closure.
		Leaking shaft seal assembly.	With pump stopped and primed, look for leakage at the back of the pump. Replace pump seal assembly if leak found (WP 0009).
		Worn pump impeller or wear plate	Adjust clearance between the impeller and the wear plate (WP 0009). If severely worn, replace impeller and wear plate.
2	Raw Water Pump P1 or P2 runs noisy or rough.	Noise is at the pump: shaft clamp is loose, impeller is rubbing on wear plate	Check clearance between impeller and wear plate. Adjust as needed. Be sure shaft clamp is tight (WP 0009).
		P-2 only: Noise is at the motor: worn bearings.	Replace the motor (WP 0009).
3	Raw Water Pump P2 will not run or stops after running. Green Run light is on. Red stop push button light is NOT on.	At first start up, circuit breaker CB106 manually set to OFF position (black handle down).	Set CB to On position (black handle up). TM 10-4610-309-10/TM10802A-OI/1A VOL 1 (WP 0004)

Table 1. Raw Water System Troubleshooting - Continued.

ITEM	MALFUNCTION	POSSIBLE CAUSES	CORRECTIVE ACTION
3 cont.	Raw Water Pump P2 will not run or stops after running. Green Run light is on. Red stop push button light is NOT on. (Continued)	CB106 ground fault breaker has tripped. **WARNING** **Electrical Safety. The TWPS unit must be shut down and the Main Circuit Breaker set to OFF prior to disconnecting the power cable. Failure to observe this warning may result in serious injury or death.**	Open the PDP. Locate the raw water pump P-2 CB106 ground fault breaker TM 10-4610-309-10/TM10802A-OI/1A VOL 1 (WP 0004). If the blue lever is down, push it up to reset. If the breaker trips again, isolate the fault as follows: 1) Set the Main Circuit Breaker to OFF. Remove the power cable at the PDP. Check and clean the PDP connector pins. Install the connector cap. Set the Main Circuit Breaker to ON. Push the Start button. If the breaker trips, replace the circuit breaker. 2) Set the Main Circuit Breaker to OFF. Disconnect the power cable at the pump. Reconnect the cable at the PDP. Cap the cable connector and lay the cable end over the pump frame. Set the Main Circuit Breaker to ON. Push the start button. If the breaker trips, replace the cable or notify Field to inspect and repair the failed connector. 3) Set the Main Circuit Breaker to OFF. With the power cable connected, disconnect the cable from the junction box to the motor. Repeat the test. If the breaker trips, clean the junction box connector pins and the inside of the box. Remove any deposits and corrosion. 4) Clean the motor cable connector pins and connect to the junction box. 5) If the breaker continues to trip, replace the motor (WP 0009).
		Damaged or corroded power cable connections.	Remove power cable. Notify Field to replace the connector if damage found. Clean connector pins if corroded.
		Damaged pump power cable.	Test electrical continuity between connector ends. Replace cable if continuity is not observed.
		Corroded pump skid junction box connectors, loose wire inside junction box.	Clean corroded connectors; repair loose wires.
		Failure of M501 motor contactor – main contacts corroded.	Open the PDP. Set the Main breaker to ON. Push the raw water pump start button. Check the voltage between the contactor output terminals and ground. If one or more do not show voltage, replace the contactor (WP 0024).
		Motor windings have failed.	Continuing, if voltage is found, replace motor (WP 0009).

Table 1. Raw Water System Troubleshooting - Continued.

ITEM	MALFUNCTION	POSSIBLE CAUSES	CORRECTIVE ACTION
4	Raw Water Pump P2 will not run. Green Run light does not come on or pump stops while operating. Red stop push button light is NOT on.	Failure of Raw Water Pump #2 Start button or PLC Slot #1 Input card	Open OCP display panel to expose the sub-panel (WP 0021). Set Main CB to ON. Push and hold raw water pump start. Check the slot #1 LED lights. If channel 1 is not ON: 1) Open the slot #1 wire-way cover. Locate the IN1 terminal. Check for AC 110-volts between IN1 and ground while pushing and holding the start button. 2) If voltage is found, replace the Slot #1 Input card (WP 0021). 3) If voltage is not found, replace the Raw Water Pump #2 Start button (WP 0020).
		Failure of PLC Slot #4 Output card or failure of the motor contactor – actuating coil failure.	Open the PDP door and turn the Main Circuit Breaker to the ON position (WP0011). Locate the contactor and push the start button. If the contactor does not pull in: 1) Open the slot #4 wire-way cover. Locate the O0 terminal. Check for AC 110 volts between O0 and ground while pushing and holding the start button. 2) If voltage is not found, replace the Slot #4 output card (WP 0021). 3) If voltage is found, replace the contactor (WP 0024).
		Failure of PLC Slot #2 Input card or M501 motor contactor auxiliary relay	If the contactor pulls in, find the PLC slot #2 card. If channel 8 is OFF: 1) Open the slot #2 wire-way cover. Locate the IN8 terminal. Check for AC 110-volts between IN8 and ground while pushing and holding the start button. 2) If voltage is found, replace the Slot #2 Input card (WP 0021). 3) If voltage is not found, replace the motor contactor (WP 0024).
5	Raw water pump P-2 was running, but stops, or fails to start and the RED stop button light is ON.	CB106 motor circuit breaker is tripped.	Open PDP and check CB106 circuit breaker TM 10-4610-309-10/TM10802A-OI/1A VOL 1 (WP 0004). Reset as needed. If it trips again, secure the power source and troubleshoot for short circuits as follows: 1) Remove the pump power cable at both ends. Check for shorts between pins in the PDP connector and ground. If found, use the wiring diagram to check back along the shorted wire for the source of the short. 2) Check for shorts between power cable connector pins. Replace cable if found, or notify Field to inspect and repair the connectors.

Table 1. Raw Water System Troubleshooting - Continued.

ITEM	MALFUNCTION	POSSIBLE CAUSES	CORRECTIVE ACTION
5 cont.	Raw water pump P-2 was running, but stops, or fails to start and the RED stop button light is ON (continued).	CB106 motor circuit breaker is tripped (continued).	3) Disconnect the cable between the motor and the junction box. Check for shorts between pump junction box connector pins. If found, repair the junction box. 4) Check the motor cable connector pins for shorts. If found, disconnect the cable from the motor wires and check the pins again. If a short is found, replace the cable. 5) Check the motor wires for shorts. If found, replace the motor (WP 0009). 6) If no shorts are found, replace the circuit breaker (WP 0024).
		Contactor M501 Thermal Overload has tripped.	Shut down to standby. Open the PDP and locate contactor M501 TM 10-4610-309-10/TM10802A-OI/1A VOL 1 (WP 0004). Push in the Blue overload reset button. Close the PDP and start the pump. If noise is heard from the pump, refer to #2 above. If the failure repeats, 1) Check for binding of the motor or pump. • If shaft cannot be turned freely by hand, remove the pump from the motor. If the motor shaft will not turn, replace the motor. If the motor shaft turns, complete the dissassembly of the pump, clean the pump, and replace worn parts. After assembly, be sure that the motor shaft turns freely (WP 0009). • If the shaft turns freely, check for loose wires. 2) Open the PDP. Leave the main breaker off. Check for loose wires: • At the top of the contactor • At the bottom of the thermal overload. • At EMP shunts V106, 107 and 108. 3) Push the contactor in by hand. Check for continuity between the top and bottom connections. If not found on all legs, replace the contactor and thermal overload (WP 0024) 4) Open the connection box on the motor and check for loose wires. 5) Open the junction box on the pump skid and check for loose wires. 6) If the fault is not identified, replace the motor.

Table 1. Raw Water System Troubleshooting - Continued.

ITEM	MALFUNCTION	POSSIBLE CAUSES	CORRECTIVE ACTION
6	Raw Water Pump P1 or P2 leaks water along the shaft.	Worn shaft seal assembly.	Replace pump seal assembly (WP 0009).
7	Raw Water Pump P1 or P2 leaks water at the inlet or outlet flange.	Deteriorated inlet flapper assembly or outlet flange gasket.	Replace inlet flapper assembly or outlet flange gasket (WP 0009).
8	Cyclone separator has no flow through the drain or raw water flow through the cyclone is restricted.	Cyclone is overloaded with too much sand. Cyclone is plugged with sand. Cyclone has an internal failure.	Operate cyclone with valve V-104 fully open. Close Raw Water Flow Valve V-107 and fully open the Cyclone Blowdown Flow Valve V-104 to blow sand out of the cyclone. If this fails to clear the cylcone, remove cyclone drain adaptor A-03. If this doesn't work, poke into the cyclone drain using a piece of wire to clear sand out of the cyclone. If the cyclone is still plugged, pump clean water, such as product water from the distribution tanks, into the cyclone discharge and out the cyclone inlet to the ground. Remove the cyclone from service. Continue operation. Replace the cyclone.
9	Insufficient raw water flow to maintain MF Feed Tank level even with flow control valve fully open.	Partially clogged floating inlet strainer. P1/P2 pump is not running or air leakage through hose coupling gaskets. Clogged cyclone separator. Air leakage at Adaptor A01 Suction lift is too high. Elevation from pumps is greater than allowed. Debris caught in pump suction, pump impeller, or Adaptor A-05 check valve V-107. Worn pump impeller or wear plate.	Clean the floating inlet strainer. See corrective action for P1/P2 pump malfunction. See corrective action for cyclone separator malfunction. Check gaskets and replace as needed. Be sure the support strap takes the hose weight and keeps the adaptor horizontal. Reconfigure pump closer to water. Establish new site in accordance with (WP 0004)TM 10-4610-309-10. Remove hoses and adpators. Check for debris. Remove as needed. Adjust the clearance between the impeller and the wear plate. If no longer able to adjust, replace the impeller and wear plate (WP 0009).

Table 2. Diesel Engine Troubleshooting.

ITEM	MALFUNCTION	POSSIBLE CAUSES	CORRECTIVE ACTION
1	Diesel engine will not turn over using recoil starter	Recoil starter broken.	Continue operation using the electric starter. Replace recoil starter (WP 0011).
		Engine has seized.	Remove the pump from the engine (WP 0009). If the engine will not turn over, replace the diesel engine (WP 0011).
		Pump has seized.	Disassemble and clean the pump (WP 0009). Replace worn parts. Mount the pump on the engine. Make sure the pump turns freely.
2	Diesel engine will not turn over using electric starter.	Power cable not connected at the diesel engine or at the power source.	Ensure that the power cable is firmly connected at the diesel engine and at the power source.
		Power source not energized.	Ensure that power source is energized.
		Loose electrical connections to the starter magnetic switch.	Tighten electrical connections.
		Corroded electrical connections to the starter magnetic switch.	Clean electrical connections.
		Malfunction of starter.	Replace electric starter assembly (WP 0011).
		Malfunction of starter switch.	Replace the junction box (WP 0009).
		Engine has seized.	See item 1 above.
		Pump has seized.	See item 1 above.
3	Diesel engine is hard to turn over using recoil starter.	Decompression lever not pushed down.	Push the decompression lever down.
		Lubricating oil has deteriorated.	Change the oil (WP 0011).
		Engine beginning to seize.	Remove the pump from the engine (WP 0009). If the engine still show signs of seizing, replace the diesel engine (WP 0011).
4	Diesel engine turns over but will not start.	New engine or first start after storage.	May take up to 15 pulls to vent fuel lines. Bleed fuel system if required (WP 0011).
		Fuel cock is closed.	Open fuel cock.
		Fuel tank empty.	Add fuel and re-start.
		Throttle was not set to START.	Move the throttle to the START position.
		Fuel lines incorrectly connected.	Check for proper connection (WP 0011)
		Air cleaner filter element is dirty.	Check/replace air cleaner filter element. (WP 0037), TM 10-4610-309-10.
		Fuel filter is clogged.	Clean or replace fuel filter (WP 0011).

Table 2. Diesel Engine Troubleshooting – Continued.

ITEM	MALFUNCTION	POSSIBLE CAUSES	CORRECTIVE ACTION
4 cont.	Diesel engine turns over but will not start (continued)	Fuel injection pump has failed.	Remove fuel injection pipe from the fuel injection valve and pull the recoil starter. If fuel does not come out the pipe, replace the fuel injection pump (WP 0011).
		Fuel injection valve is clogged.	Remove the fuel injection valve and reconnect it to the fuel injection pipe. Pull the recoil starter. If fuel does not come out of the tip of the fuel injection valve, clean or replace the fuel injection valve (WP 0011).
5	Diesel engine turns over easily, but does not start or starts with difficulty.	Fuel injection valve loose.	Tighten nuts to the fuel injection valve retaining plate (WP 0011).
		Incorrect valve head clearance.	Check/adjust intake/exhaust valve clearance (WP 0011).
6	Diesel engine stops during operation.		**WARNING** **Never add fuel when the engine is running. Failure to observe this warning may result in fuel igniting causing severe burns.**
		Fuel tank empty.	Add fuel and bleed air from the fuel injection pump (WP 0011).
		Water in fuel.	Drain fuel tank. Refill with new fuel (WP 0011).
		Lube oil level low and engine seized.	Allow engine to cool. Add lube oil, then try to start the engine. If the engine remains seized with the pump decoupled from the engine, replace the engine (WP 0011).
		Air cleaner filter element is dirty.	Clean or replace the air cleaner filter element (WP 0037, TM 10-4610-309-10).
		Fuel filter is clogged.	Clean or replace the fuel filter (WP 0011).
		Fuel injection pump has failed.	See item 4 above.
		Fuel injection valve is clogged.	See item 4 above.
7	Diesel engine exhaust continuously emits black smoke after warming up or engine output drops.	Poor fuel quality.	Drain fuel tank. Refill with new fuel. (WP 0011)
		Clogged air cleaner filter element.	Clean or replace air cleaner filter element. (WP 0041, TM 10-4610-309-10)
		Fuel injection valve is clogged.	See item 4 above.

Table 2. Diesel Engine Troubleshooting – Continued.

ITEM	MALFUNCTION	POSSIBLE CAUSES	CORRECTIVE ACTION
8	Diesel engine exhaust continuously emits bluish white smoke after warming up or engine output drops.	Poor fuel quality.	Drain fuel tank. Refill with new fuel.
		Too much engine oil.	Drain oil to proper level (WP 0011).
		Oil viscosity is too low (oil is too thin).	Change the engine oil (WP 0011).
		Carbon deposits on intake/exhaust valves.	Clean intake/exhaust valves (WP 0029).
		Defective valve stem seal.	Replace valve stem seal (WP 0029).
		Leaking cylinder head gasket.	Replace the cylinder head gasket (WP 0029).
		Broken or worn piston rings.	Replace the piston rings (WP 0029).

TACTICAL WATER PURIFICATION SYSTEM (TWPS) TROUBLESHOOTING PROCEDURES FIELD TROUBLESHOOTING PROCEDURES – TACTICAL WATER PURIFICATION SYSTEM (TWPS)

THIS SECTION COVERS:
MF System

INITIAL SETUP:
TWPS Operating
Maintenance Level
Field

MF SYSTEM MALFUNCTIONS

Table 3. MF Feed Pump P-3 Troubleshooting.

ITEM	MALFUNCTION	POSSIBLE CAUSES	CORRECTIVE ACTION
1	MF feed pump P-3 does not come on for Fill/Hold, but valve V111 cycles OPEN and green Run light comes on. Red stop light is NOT on.	At first start up, circuit breaker CB111 manually set to OFF position (black handle down).	Set CB to On position (black handle up) TM 10-4610-309-10/TM10802A-OI/1A VOL 1 (WP 0004).
		CB111 ground fault breaker has tripped **WARNING** **Electrical Safety. The TWPS unit must be shut down and the Main Circuit Breaker set to OFF prior to disconnecting the power cable. Failure to observe this warning may result in serious injury or death.**	Open the PDP. Locate the MF Feed pump P-3 CB111ground fault breaker TM 10-4610-309-10/TM10802A-OI/1A VOL 1 (WP 0004). If the blue lever is down, push it up to reset (WP 0024). If the breaker trips again, isolate the fault as follows: 1) Set the Main Circuit Breaker to OFF. Remove the power cable at the PDP. Check and clean the PDP connector pins. Install the connector cap. Set the Main Circuit Breaker to ON. Perform MF Fill/Hold, then set the Mode to RUN. Push the Start button. If the breaker trips, replace the circuit breaker. 2) Set the Main Circuit Breaker to OFF. Disconnect the power cable at the pump. Reconnect the cable at the PDP. Cap the cable connector and lay the cable end over the pump frame. Set the Main Circuit Breaker to ON. Perform MF Fill/Hold, then set the Mode to RUN. Push the Start button. Push the start button. If the breaker trips, clean the cable connector pins. Repeat the test. If the breaker trips, replace the cable or notify Field to inspect and repair the connectors. 3) Set the Main Circuit Breaker to OFF. With the power cable connected, disconnect the cable from the junction box to the motor. Repeat the test. If the breaker trips, clean the junction box connector pins and the inside of the box. Remove any deposits and corrosion. 4) Clean motor cable connector pins and connect to the junction box. 5) If the breaker continues to trip, replace the motor (WP 0012).

Table 3. MF Feed Pump P-3 Troubleshooting – Continued.

ITEM	MALFUNCTION	POSSIBLE CAUSES	CORRECTIVE ACTION
1 cont.	MF feed pump P-3 does not come on for Fill/Hold, but valve V111 cycles OPEN and green Run light comes on. Red stop light is NOT on (continued).	Damaged or corroded power cable connections.	Remove power cable. Inspect connectors for damage and corrosion. Notify Field to replace the connector if damage found. Clean connector pins if corroded.
		Damaged pump power cable.	Test electrical continuity between connector ends. Replace cable if continuity is not observed.
		Corroded junction box connectors, loose wire inside junction box.	Clean corroded connectors; repair loose wires.
		Failure of M502 motor contactor – main contacts corroded.	Open the PDP. Set the Main breaker to ON. Set the System Mode Switch to FILL/HOLD. Check the voltage between the contactor output terminals and ground. If one or more do not show voltage, replace the contactor (WP 0024).
		Motor windings have failed.	Continuing, if voltage is found, replace motor (WP 0012).
2	MF feed pump P-3 does not come on for Fill/Hold, valve V111 cycles OPEN, but green MF Feed Pump Run light does not come on.	Failure of PLC #4 Slot Output card or failure of the motor contactor – actuating coil failure.	Open OCP display panel to expose the sub-panel (WP 0021). Open the PDP door and turn the Main Circuit Breaker to the ON position. Locate the contactor and set the System Mode Switch to FILL/HOLD. If the contactor does not pull in: 1) Open the slot #4 wire-way cover. Locate the O1 terminal. Check for AC 110 volts between O1 and ground (WP 0021). 2) If voltage is not found, replace the Slot #4 output card (WP 0021). 3) If voltage is found, replace the contactor (WP 0024).
		Failure of PLC Slot #2 Input card or motor contactor auxiliary relay.	If the contactor pulls in, find the PLC slot #2 card. If channel 9 is OFF: 1) Open the slot #2 wire-way cover. Locate the IN9 terminal. Check for AC 110-volts between IN9 and ground (WP 0021). 2) If voltage is found, replace the Slot #2 Input card (WP 0021). 3) If voltage is not found, replace the motor contactor (WP 0024).

Table 3. MF Feed Pump P-3 Troubleshooting – Continued.

ITEM	MALFUNCTION	POSSIBLE CAUSES	CORRECTIVE ACTION
3	MF feed pump P-3 does not come on for Fill/Hold, valve V-111 remains CLOSED and green Run light does not come on.	Failure of System Mode Switch or PLC Slot #3 Input card.	Open OCP display panel to expose the sub-panel (WP 0021). Set Main CB to ON. Set mode switch to Fill/Hold. Check the slot #3 LED lights. If channel 0 is OFF: 1) Open the slot #3 wire-way cover. Locate the IN0 terminal. Check for AC 110-volts between IN0 and ground. 2) If voltage is found, replace the Slot #3 Input card (WP 0021). 3) If voltage is not found, replace the System Mode Switch (WP 0020 Rotary Switch).
4	MF Feed Pump will not start in RUN. Green Run light does not come on or pump stops while operating. Red stop push button light is NOT on. If at startup, the Fill/Hold cycle was completed correctly.	Failure of MF Feed Pump Start button or PLC Slot #1 Input card.	Open OCP display panel to expose the sub-panel (WP 0021). Set Main CB to ON. Complete the Fill/Hold step and set the Mode Switch to RUN. Push and hold MF feed pump start. Check the slot #1 LED lights. If channel 3 is not ON: 1) Open the slot #1 wire-way cover. Locate the IN1 terminal. Check for AC 110-volts between IN3 and ground while pushing and holding the start button. 2) If voltage is found, replace the Slot #1 Input card (WP 0021). 3) If voltage is not found, replace the MF Feed Pump Start button (WP 0020).
		Failure of PLC Slot #4 Output card or failure of the motor contactor – actuating coil failure.	Open the PDP door and turn the Main Circuit Breaker to the ON position. Complete the Fill/Hold step and set the Mode Switch to RUN. Locate the contactor and push the start button. If the contactor does not pull in: 1) Open the slot #4 wire-way cover. Locate the O1 terminal. Check for AC 110 volts between O1 and ground while pushing and holding the start button. 2) If voltage is not found, replace the Slot #4 output card (WP 0021). 3) If voltage is found, replace the contactor (WP 0024).
		Failure of PLC Slot #2 Input card or M502 motor contactor auxiliary relay.	If the contactor pulls in, find the PLC slot #2 card. If channel 9 is OFF: 1) Open the slot #2 wire-way cover. Locate the IN9 terminal. Check for AC 110-volts between IN8 and ground while pushing and holding the start button. 2) If voltage is found, replace the Slot #2 Input card (WP 0021). 3) If voltage is not found, replace the motor contactor (WP 0024).

Table 3. MF Feed Pump P-3 Troubleshooting – Continued.

ITEM	MALFUNCTION	POSSIBLE CAUSES	CORRECTIVE ACTION
5	MF Feed Pump P-3 comes on for Fill/Hold but there is no MF Feed Flow reading on the OCP Feed Flow indicator and flow is not observed flowing from the waste hose.	Automatic valves have not cycled properly. If pump was drained, the pump may be air bound.	Complete the BIT self test10-4610-309-10/TM10802A-OI/1A VOL 1 (WP 0013) to identify which valve is not functioning properly. See Automatic Valve Troubleshooting for correction. With the MF Feed Tank at least 50% full, loosen the MF Feed Discharge Hose (F07) coupling at the TWPS inlet connection until water flows freely. Reconnect and repeat the start up procedures.
6	MF Feed Pump was running, but stops and the RED stop button light is ON.	CB111 motor circuit breaker is tripped.	Open PDP and check CB111 circuit breaker. Reset as needed. If it trips again, troubleshoot for short circuits. With the power source secured proceed as follows: 1) Remove the power pump cable at both ends. Check for shorts between pins in the PDP connector. If found, use the wiring diagram to check back along the shorted wire for the source of the short. (WP 0028). 2) Check for shorts between power cable connector pins. If found, replace cable. 3) Disconnect the cable between the motor and the junction box. Check for shorts between pump junction box connector pins. If found, repair the junction box. 4) Check the motor cable connector pins for shorts. If found, disconnect the cable from the motor wires and check the pins again. If a short is found, replace the cable or notify Field to inspect and repair the connector.. 5) Check the motor wires for shorts. If found, replace the motor (WP 0009). 6) If no shorts are found, replace the circuit breaker (WP 0024).

Table 3. MF Feed Pump P-3 Troubleshooting – Continued.

ITEM	MALFUNCTION	POSSIBLE CAUSES	CORRECTIVE ACTION
6 (cont.)	MF Feed Pump was running, but stops and the RED stop button light is ON (continued).	Contactor M502 Thermal Overload has tripped.	Shut down to standby. Open the PDP and locate contactor M502. Push in the Blue overload reset button (WP 0024). Close the PDP, complete normal startup. If the failure repeats, 1) Check for binding of the motor or pump. • If shaft cannot be turned freely by hand, remove the pump from the motor. If the motor shaft will not turn, replace the motor. If the motor shaft turns, complete the dissassembly of the pump, clean the pump, and replace worn parts. After assembly, be sure that the motor shaft turns freely (WP 0012). • If the pump turns freely, check for loose wires. 2) Open the PDP. Check for loose wires • At the top of the contactor • At the bottom of the thermal overload. • At EMP: shunts V111, 112 and 113.
		Contactor M502 Thermal Overload has tripped (continued).	3) Push the contactor in by hand and hold. Check for continuity between the top and bottom connections. If not found on all legs, replace the contactor and thermal overload (WP 0024) 4) Open the connection box on the motor and check for loose wires. 5) Open the junction box on the pump skid and check for loose wires. 6) If the fault is not identified, replace the motor (WP 0012).
7	MF Feed Pump P-3 leaks water along the shaft.	Worn or damaged shaft seal.	Replace shaft seal (WP 0012).
8	MF Feed Pump P-3 runs noisy or rough.	Worn motor bearings.	Replace motor (WP 0012).

Table 4. Automatic Valves, Air Solenoid Valves Troubleshooting.

ITEM	MALFUNCTION	POSSIBLE CAUSES	CORRECTIVE ACTION
1	Backwash Fail Alarm comes on during backwash.	Automatic valve failed to operate.	Shut down to standby. Conduct BIT self test procedure10-4610-309-10/ TM10802A-OI/1A VOL 1 (WP 0013). See below for troubleshooting any valve which does not operate as required.
		Backwash air supply solenoid valve XV-901 solenoid coil failure.	Continue with BIT and verify operation of solenoid valve XV-901. If it does not operate, refer to Item 5 below.
		Pressure transmitter PT-102 failure.	Open the OCP display panel to expose the sub-panel. Locate the slot 12 card. If the channel 1 light is blinking, replace PT-102 (WP 0023).
		If Feed Flow Control is set to Manual, XV-912 failure, cable failure or PLC Slot 6 Output card failure.	Disconnect the MS connector. Start backwash. Check for 120 volts between hot pin and ground. If present, reconnect and feel the coil for 60 Hz buzz. If the coil does not buzz, replace the solenoid coil. (WP 0022). If coil buzz is noted, replace the valve (WP 0022). If 120-volt power is not noted, open the OCP display panel to expose the sub-panel. Find the slot #6 output card. Open the wire-way and locate terminal O11. Start backwash. If voltage is not measured between terminal 11 and ground, replace the slot #6 card. If voltage is measured, troubleshoot the wiring and MS connector for open circuits.
2	Automatic valve (except V-202) fails to cycle when tested during BIT self test.	Valve actuator.	Repeat the BIT test 10-4610-309-10/ TM10802A-OI/1A VOL 1 (WP 0013) and stop at the test for the failed valve. Stop the air compressor if on. Listen for air noise at the valve actuator vent. Noise indicates a failed piston seal. Repair or replace the actuator (WP 0027).
		PLC output card #5 relay failure.	Open the OCP display panel to expose the subpanel. Find the slot #5 card. Open the wire-way cover and locate the output terminal for the failed valve. Repeat the BIT test and stop at the test for the failed valve. If 110v is not measured between the terminal and ground, replace the slot #5 card (WP 0021). V-111 Channel/terminal 8 V-112 Channel/terminal 3 V-113 Channel/terminal 4 V-201 Channel/terminal 7 V-201 Skip V-401 Channel/terminal 5 V-402 Channel/terminal 6

Table 4. Automatic Valves, Air Solenoid Valves Troubleshooting – Continued.

ITEM	MALFUNCTION	POSSIBLE CAUSES	CORRECTIVE ACTION
2 cont.	Automatic valve (except V-202) fails to cycle when tested during BIT self test (continued).	Solenoid coil or solenoid valve failure.	Repeat the BIT test. Push the button only once stopping at "1" with all indicator lamps lit. All valves are de-energized. Open the instrument/solenoid panelbox door and the inner panel to expose the solenoid valve manifold assembly. Locate the solenoid valve which operates the failed automatic valve. Push the white button on the solenoid. You should hear air flow and the automatic valve should cycle. 1) If the valve cycles, replace the solenoid coil (WP 0012). 2) If the valve does not cycle, replace the individual solenoid valve (WP 0012).
3	Automatic valve does not cycle fully to the de-energized or BIT energized position.	Damaged valve liner or failed shaft bearing.	Remove valve and inspect the liner. Remove the actuator and be sure that the valve can be turned easily with a wrench. Replace the valve if damaged (WP 0027).
4	Filtrate Flow Control Valve V-202 fails to operate during BIT test. Or RO feed tank fills rapidly and overflows. The RO Feed Tank % Level indicator properly reads the increasing level and shows a level of approximately 110% at overflow.	Valve actuator failure. Valve positioner failure. I/P transducer FY-102 or Slot # 8 Analog output card failure.	Repeat the BIT test and stop at the test for valve V-202. Stop the air compressor if on. Listen for air noise at the valve actuator vent. Noise indicates a failed piston seal. Repair or replace the actuator (WP 0027). Set the Feed Flow Control Panel Feed Control Selector Valve V-914 to Manual. If the valve V-202 indicator does not show a movement as the pressure regulator is adjusted, remove the cover. Check the indicator wheel. If it has come loose, set the selector valve to Automatic and tighten the wheel in the full open position. If the wheel is tight, replace the Positioner (WP 0027). With the power on and the TWPS in Standby, open the OCP inner panel and locate the PLC Slot #8 card. Open the wire terminal cover. Locate terminal O0 and remove the wire from the terminal. Connect a milli-ammeter between the terminal screw and the wire. If the reading is not approximately 20 mA, replace the Slot #8 card (WP 0022). With the power on and the TWPS in Standby, open the OCP inner panel and locate the PLC Slot #8 card. If the Output O light is blinking, check for loose wires or connectors in the I/P current loop. If wires and connector all show continuity, replace the I/P transducer (WP 0021). If the reading is approximately 20 mA, replace the I/P transducer (WP 0022).

Table 4. Automatic Valves, Air Solenoid Valves Troubleshooting – Continued.

ITEM	MALFUNCTION	POSSIBLE CAUSES	CORRECTIVE ACTION
5	Solenoid valve XV-901, XV-902 or XV-903 fails to operate during BIT test.	Failed solenoid coil.	Replace coil with spare coil provided in the BII (WP 0041, TM 10-4610-309-10). If the failure is not corrected, continue.
		PLC Slot 5 output card failure, cable wiring failure, or valve failure.	Open the OCP display panel to expose the sub-panel. Locate the PLC Slot 5 card and open the wire way. Check for AC voltage between the terminal (see end of Table 4 next page) and ground when the BIT is stepped to the test for the valve. 1) If there is no voltage, replace the Slot 5 output card (WP 0021). 2) If there is voltage, disconnect the electrical connector at the valve. Repeat the BIT and check for voltage between the AC+ pin (pin A) and ground. If no voltage, troubleshoot the wiring and connector for an open circuit. 3) If voltage is measured, replace the valve (WP 0016).
		PLC Slot 5 output card failure, cable wiring failure, or valve failure (continued)	Reference: The voltage will be noted for 5-seconds, then off and then on again three times. The Slot 5 terminals are as follows: XV-901 terminal 0 XV-902 terminal 1 XV-903 terminal 2

Table 5. General MF System Troubleshooting.

ITEM	MALFUNCTION	POSSIBLE CAUSES	CORRECTIVE ACTION
1	Backwash does not initiate.	Failure to push MF Backwash Start button during startup procedures.	Follow procedures TM10-4610-309-10/ TM10802A-OI/1A VOL 1 (WP 0014).
		Failure of MF Backwash Start button or PLC Slot #2 Input card.	Open OCP display panel to expose the sub-panel (WP 0021). Set Main CB to ON. Push and hold Backwash start. Check the Slot #2 LED lights. If channel 4 is not ON: 1) Open the Slot #2 wire-way cover. Locate the IN4 terminal. Check for AC 110-volts between IN4 and ground while pushing and holding the start button. 2) If voltage is found, replace the Slot #2 Input card (WP 0021). 3) If voltage is not found, replace the MF Backwash Start button (WP 0020).
2	RO Feed Tank Level Low alarm with RO Feed Tank Level display reading correctly. Operator has performed corrective actions in (WP 14 and WP 32 TM10-4610-309-10) and system is operable in manual mode. System passes BIT test and there are no Backwash Flow Low alarms.	Leaking or clogged air tubing at Feed Flow Control Panel.	Check tubing connections. Disconnect tubing with V-909 closed. Open V-909 to verify air flow. Close V-909 and reconnect tubing.
		Inadequate air pressure to Feed Flow Control Panel.	Check pressure gauge PI-902 for 100 psig. Adjust PRV-901 to provide a 100 psig reading at PI-902 (WP 0044, TM 10-4610-309-10).
		V-202 actuator, positioner or I/P transmitter failure.	Troubleshoot according to table 4, item 4.
		V-113 limit stop is out of adjustment.	Check RO feed tank levels after backwash. They should be between 30 and 50%. Also, during the rewet portion of the backwash cycle the MF feed flow should be near 140 gpm. If these conditions are not observed, adjust V-113 limit stop so that the valve is open more during the de-energized state. (See WP 0027) for this procedure. If adjustment does not correct the problem, disassemble the V-113 limit stop assembly to make sure the adapter sleeve is installed correctly. If this does not correct the problem, return limit stop adjustment to previous setting.
		Mechanical problem with internals of V-202.	Remove valve from piping and inspect liner and disc for wear (WP 0027).
		Mechanical problem with internals of V-201.	Remove valve from piping and inspect liner and disc for wear (WP 0027).
		Feed TDS not properly set or functioning.	Have operator set correct TDS. If TDS cannot be set, troubleshoot according to WP 35, table 2, item 5. 4 -20mA corresponds to a 0-100,000 mg/liter range.
		Temperature transmitter not operating correctly.	Refer to table 7, item 8. 4-20 mA corresponds to a 0-250 degree F range.

Table 5. General MF System Troubleshooting – Continued.

ITEM	MALFUNCTION	POSSIBLE CAUSES	CORRECTIVE ACTION
3	RO Feed Tank % Level reads 0 with level in the tank, reads a level other than actual by observation, or the reading changes up and down rapidly.	Level measurement loop failure.	See OCP and Instrument System Malfunctions (WP 0037, TM 10-461-309-10).
4	MF Backwash Flow Low alarm comes on during backwash (less than 190 gpm). Clean Strainer alarm comes on during backwash (less than 210 gpm, but more than 190 gpm)	Dirty MF Feed Strainer S-2. MF Main Feed Valve V-111, Shell Lower Feed Valve V-113 or Shell Backwash Upper Outlet Valve V-401 fails to fully open. Debris in the MF feed pump. Flow measurement loop failure. Worn MF feed pump impeller or wear ring.	Check and clean the strainer (WP 0040). Conduct BIT 10-4610-309-10/ TM10802A-OI/1A VOL 1 (WP 0013). Be sure that these valves cycle fully open. If not, refer to Table 4. Remove the pump from the system and check for debris clogging the inlet or stuck in the impeller. See OCP and Instrument System Malfunctions (WP 0037, TM 10-461-309-10). Dissassemble pump, inspect and replace the impeller and wear ring as indicated (WP 0012).
5	MF TMP High Alarm is not confirmed by operational checks.	Pressure transmitter PT-101 or PT-102 failure.	See OCP and Instrument System Malfunctions (WP 0037, TM 10-461-309-10).
6	MF does not drain when the System Mode Switch is set to MF Drain.	Solenoid Valve XV-903 or PLC Slot 5 output card failure. System Mode Switch or PLC Slot 3 input card failure.	Step though the BIT test and verify that XV-903 operates. If it does not operate, refer to Table 4 Item 5. Open the OCP display panel to expose the sub-panel. Locate the Slot 3 card. Set the mode switch to MF Drain. 1) If the channel 2 light is ON, replace the Slot 3 input card (WP 0021). 2) If the channel 2 light is OFF, open the wire way and check for 110 VAC between terminal IN2 and ground. If there is voltage, replace the Slot 3 input card (WP 0021). 3) If there is no voltage, replace the System Mode Switch (WP 0020 Rotary Switch).

Table 6. Feed Flow Control Panel Troubleshooting.

ITEM	MALFUNCTION	POSSIBLE CAUSES	CORRECTIVE ACTION
1	V-202 does not respond in manual mode, but functions properly in automatic mode.	Pressure regulating valve PRV-904 defective.	Replace Pressure regulating valve PRV-904 (WP 0022).
2	Pressure gauge PI-904 reading does not increase or decrease as PRV-904 is adjusted, but V-202 moves as expected.	Feed flow control panel gauge PI-904 defective.	Replace pressure gauge PI-904 (WP 0022).

TACTICAL WATER PURIFICATION SYSTEM (TWPS) TROUBLESHOOTING PROCEDURES FIELD TROUBLESHOOTING PROCEDURES – TACTICAL WATER PURIFICATION SYSTEM (TWPS)

0004 00

THIS SECTION COVERS:
RO System

INITIAL SETUP:
TWPS Operating
Maintenance Level
Field

RO SYSTEM MALFUNCTIONS

Table 7. General RO System Troubleshooting.

ITEM	MALFUNCTION	POSSIBLE CAUSES	CORRECTIVE ACTION
1	RO Feed Pump P4 will not run or stops after running. Green Run light is on. Red stop push button light is NOT on.	At first start up, circuit breaker CB116 manually set to OFF position (black handle down).	Set CB to On position (black handle up).
		Failure of the motor contactor – main contacts corroded.	Open the PDP. Set the Main breaker to ON. Push the RO feed pump start button. Check the voltage between the contactor output terminals and ground. If one or more do not show voltage, replace the contactor (WP 0024).
		Electrical wiring or motor failure.	Set the Main Circuit Breaker to OFF. Open the motor junction box and remove the insulators from the wire connections. With the wires spread apart, set the Main Circuit Breaker to ON and push the RO feed pump Start button. Measure the voltage from each phase wire to ground. 1) If voltage is found at all three, replace the motor (WP 0013). 2) If voltage is not found at a wire, troubleshoot the wire run for the location of the open circuit.
2	RO Feed Pump will not run. Green Run light does not come on or pump stops while operating. Red stop push button light is NOT on.	Failure of RO Feed Pump Start button or PLC Slot #1 Input card.	Open OCP display panel to expose the sub-panel (WP 0021). Push and hold RO feed pump start. Check the Slot #1 LED lights. If channel 5 is not ON: 1) Open the Slot #1 wire-way cover. Locate the IN5 terminal. Check for AC 110-volts between IN5 and the AC Com terminal while pushing and holding the start button. 2) If voltage is found, replace the Slot #1 Input card (WP 0021). 3) If voltage is not found, replace the RO Feed Pump Start button (WP 0020).
		Failure of PLC Slot #4 Output card or failure of the M503 motor contactor – actuating coil failure.	Open the PDP door and turn the Main Circuit Breaker to the ON position. Locate the contactor. Make sure the low level alarm is not ON. Push and hold the start button.

Table 7. General RO System Troubleshooting – Continued.

ITEM	MALFUNCTION	POSSIBLE CAUSES	CORRECTIVE ACTION
2 cont.	RO Feed Pump will not run. Green Run light does not come on or pump stops while operating. Red stop push button light is NOT on (continued).	Failure of PLC Slot #4 Output card or failure of the M503 motor contactor – actuating coil failure (continued).	If the contactor does not pull in: 1) Open the Slot #4 wire-way cover. Locate the O2 terminal. Check for AC 110 volts between O2 and ground. 2) If voltage is not found, replace the Slot #4 output card (WP 0021). 3) If voltage is found, replace the contactor (WP 0024).
		Failure of PLC Slot #2 Input card or M503 motor contactor auxiliary relay.	If the contactor pulls in, find the PLC Slot #2 card. If channel 10 is OFF: 1) Open the Slot #2 wire-way cover. Locate the IN10 terminal. Check for AC 110-volts between IN10 and ground while pushing and holding the start button. 2) If voltage is found, replace the Slot #2 Input card (WP 0021). 3) If voltage is not found, replace the motor contactor (WP 0024).
3	RO Feed Pump P-4 was running, but stops, or fails to start and the RED stop button light is ON.	CB116 circuit breaker has tripped.	Open PDP and check CB116 circuit breaker. Reset as needed. If it trips again, check for shorts. Be sure that the power source is secured. 1) Open the P-4 motor terminal box and disconnect the power cable wires. Check for short in the wires and in the motor. If in the motor, replace the motor (WP 0013). 2) If in a wire, pull all of the wires and inspect. Replace the shorted wire and any wire showing signs of damage. 3) If the motor or wires do not show a short, replace the circuit breaker (WP 0024).
		Contactor M503 Thermal Overload has tripped.	Shut down to standby. Open the PDP and locate contactor M503. Push in the Blue overload reset button (WP 0024). Close the PDP and start the pump. If the failure repeats, 1) Check for binding of the motor or pump. • If shaft cannot be turned freely by hand, remove the pump from the motor. If the motor shaft will not turn, replace the motor. If the motor shaft turns, complete the dissassembly of the pump, clean the pump, and replace worn parts. After assembly, be sure that the motor shaft turns freely (WP 0013).

Table 7. General RO System Troubleshooting – Continued.

ITEM	MALFUNCTION	POSSIBLE CAUSES	CORRECTIVE ACTION
3 (cont.)	RO Feed Pump P-4 was running, but stops, or fails to start and the RED stop button light is ON (continued).	Contactor M503 Thermal Overload has tripped (continued).	• If the pump turns freely, check for loose wires. 2) Open the PDP. Leave the main CB OFF. Check for loose wires • At the top of the contactor • At the bottom of the thermal overload. • At EMP shunts V116, 117 and 118. 3) Push the contactor in by hand and hold. Check for continuity between the top and bottom connections. If not found on all legs, replace the contactor and thermal overload (WP 0024) 4) Open the connection box on the motor and check for loose wires. 5) Open the junction box on the pump skid and check for loose wires. 6) If the fault is not identified, replace the motor.
4	RO Feed Pump P-4 leaks between pump and motor.	Worn or damaged shaft seal.	Replace the pump seal (WP 0013).
5	RO Feed Tank Low Level Alarm and HP pump stops.		Reset the PLC as follows: - Set Mode to Standby. - Drain RO feed tank. - Open the MAIN circuit breaker at the PDP (OFF position) - Then close the MAIN circuit breaker (ON)
		1) MF Feed Tank almost empty.	(1) Check level in MF Feed Tank. It should never be less than one-third full. If it is, troubleshoot raw water system as described in Table 1.
		(2) Level measurement loop failure	(2) Open the RO Feed Tank cover. If the actual level is not almost empty, the level measure loop has failed. Refer to WP 0037, TM 10-461-309-10.
6	RO Feed Pressure Low Alarm.		Reset the PLC as follows: - Set Mode to Standby. - Drain RO feed tank. - Open the MAIN circuit breaker at the PDP (OFF position) - Then close the MAIN circuit breaker (ON) - Follow normal startup procedures. - Watch HP Pump Feed Pressure gage PI-202. If the system was in backwash and the RO tank level is low, see response for RO feed tank low level alarm, item 5.

Table 7. General RO System Troubleshooting – Continued.

ITEM	MALFUNCTION	POSSIBLE CAUSES	CORRECTIVE ACTION
6 (cont.)	RO Feed Pressure Low Alarm (continued).	Random low pressure occurrence.	Start up following normal procedures. If the alarm does not repeat and the RO feed pressure reading on PI-202 is at least 40 psig, resume normal operation.
		Pressure transmitter PT-201 or electrical wiring has failed.	Attempt start up again and watch Pressure Gauge PI-202. If the alarm comes on, but the pressure does not drop below 35 psig: 1) Open the OCP display panel to expose the sub-panel. Locate the Slot #12 card. If the channel 2 light is blinking, replace PT-201 with the spare located in the BII TM 10-4610-309-10 (WP 0045). 2) Check again after installing. If the channel 2 light is still blinking, troubleshoot the wiring for an open circuit or failed connector.
		Pressure transmitter PT-201 or PLC Slot 12 Analog Input Card has failed.	Replace the Pressure Transmitter with the spare located in the BII. If this does not correct the problem, replace the PLC Slot 12 Card (WP 0021).
			If Pressure Gauge PI-202 reads less than 35 psig when the alarm comes on proceed as follows:
		In-line strainer S-4 is plugged.	Remove, inspect and clean as needed (WP 0041).
		RO Feed Tank Strainer S-3 is plugged.	Remove tank cleanout cover. Remove strainer and clean if plugged (WP 0041).
		Pump impeller and wear ring are corroded.	Dissassemble pump and repair (WP 0013).
7	Cleaning solution does not heat up with heater switch set to AUTO 2. Or The solution does not heat up at least 30 degrees in 30 minutes with the heater switch in AUTO 2.	High temperature alarm light is on.	Refer to (WP 0037, TM 10-461-309-10), table 2 for troubleshooting.
		CB201 or CB204 Circuit Breaker Tripped.	Open PDP and check circuit breakers CB201 and CB204. Reset as needed. If it trips again, check for shorts in the circuit for the heater protected by the breaker. Be sure that the power source is secured. 1) Open the heater terminal box and disconnect the power cable wires. Check for short in the cable and in the heating elements. If in a heating element, replace the heater (WP 0013). 2) If in the cable, pull all of the wires and inspect. Replace the shorted wire and any wire showing signs of damage. 3) If the heater or cable do not show a short, replace the circuit breaker (WP 0024).

Table 7. General RO System Troubleshooting – Continued.

ITEM	MALFUNCTION	POSSIBLE CAUSES	CORRECTIVE ACTION
7 (cont.)	Cleaning solution does not heat up with heater switch set to AUTO 2. Or The solution does not heat up at least 30 degrees in 30 minutes with the heater switch in AUTO 2. (Continued)	Tank Heater Switch or PLC Slot #1 Input card failure.	Open OCP display panel to expose the sub-panel (WP 0021). Set Main CB to ON. Make sure there is water in the RO feed tank. Set the switch to AUTO 2. Check the Slot #1 LED lights. If channel 12 is not ON: 1) Open the Slot #1 wire-way cover. Locate the IN12 terminal. Check for AC 110-volts between IN12 and ground. 2) If voltage is found, replace the Slot #1 Input card (WP 0021). 3) If voltage is not found, replace the Tank Heater Switch (WP 0020). 4) Repeat for the IN12 terminal.
		Failure of PLC Slot #4 Output card or failure of the heater contactor – actuating coil failure.	Open the PDP. Set the main breaker to ON. Make sure there is water in the RO feed tank. Set the heater switch to AUTO 2. If one or both contactors fail to pull in: 1) Open the Slot #4 wire-way cover. Locate the O10 and 11 terminals Check for AC 110 volts between O10 and ground and O11 and ground. 2) If voltage is not found at both terminals, replace the Slot #4 output card (WP 0021). 3) If voltage is found, replace the related contactor. For terminal O10 replace contactor K511. For terminal O11 replace contactor K512 (WP 0024).
		Broken heating element(s).	Open the heater terminal boxes. Remove the power cable wires. Check each heater element for resistance. If an open circuit is found, replace the heater (WP 0013).
8	Heaters do not turn off when RO Feed Tank temperature rises above 110 degrees F	Temperature transmitter TT-201 or electrical wiring failure.	Open the OCP display panel to expose the sub-panel. Locate the Slot #12 card. If the channel #5 light is blinking: 1) Replace the temperature transmitter (WP 0023). 2) If the light blinks after replacing TT-201, troubleshoot the wiring.
		Temperature transmitter TT-201 or Slot #12 input card failure.	If the light is not blinking, remove the wire from terminal IN5 and measure DC mA between the wire and the terminal. 1) If the reading with the RO Feed Tank temperature at 110 degrees F is approximately 11 mA, replace the Slot #12 input card (WP 0021). 2) If the reading is less, replace the temperature transmitter (WP 0023).

TACTICAL WATER PURIFICATION SYSTEM (TWPS) TROUBLESHOOTING PROCEDURES FIELD TROUBLESHOOTING PROCEDURES – TACTICAL WATER PURIFICATION SYSTEM (TWPS)

THIS SECTION COVERS:
High Pressure Pump

INITIAL SETUP:
TWPS Operating
Maintenance Level
Field

HIGH PRESSURE PUMP AND TURBOCHARGER MALFUNCTIONS

Table 8. High Pressure Pump, Turbocharger Troubleshooting.

ITEM	MALFUNCTION	POSSIBLE CAUSES	CORRECTIVE ACTION
1	HP pumps do not start when start button is pushed. Green light does not come on. Red light does not come on. Feed Pressure Low alarm is not on.	Failure to follow start-up procedures.	Be sure all steps have been completed.
		Failure of High Pressure Pumps Start button or PLC Slot #1 Input card.	With the RO Feed Pump ON and the reject flow over 10 gpm, open OCP display panel to expose sub-panel (WP 0021). Push and hold HP Pump Start. Check the Slot #1 LED lights. If channel 7 is not ON: 1) Open the Slot #1 wire-way cover. Locate the IN7 terminal. Check for AC 110-volts between IN7 and ground while pushing and holding the start button. 2) If voltage is found, replace the Slot #1 Input card (WP 0021). 3) If voltage is not found, replace the High Pressure Pumps Start button (WP 0020).
		Failure of PLC Slot #4 Output card or failure of the P-5 motor contactor M504 - actuating coil failure.	Open the PDP door and turn the Main Circuit Breaker to the ON position. Follow normal start-up steps up to starting the High Pressure Pumps. Locate contactor M504 and push the start button. Do not hold in. If the contactor does not pull in: 1) Open the Slot #4 wire-way cover. Locate the O3 terminal. Push the button and check for AC 110 volts between O3 and ground. 2) If voltage is not found, replace the Slot #4 output card (WP 0021). 3) If voltage is found, replace the contactor (WP 0024).
		Failure of PLC Slot #2 Input card or motor contactor auxiliary relay.	If the contactor pulls in but immediately drops back out when the push button is released, find the PLC Slot #2 card. Push the start button again and hold in. If the channel 11 light is OFF: 1) Open the Slot #2 wire-way cover. Locate the IN11 terminal. Check for AC 110-volts between IN11 and ground while pushing and holding the start button. 2) If voltage is found, replace the Slot #2 Input card (WP 0021). 3) If voltage is not found, replace the motor contactor (WP 0024).

Table 8. High Pressure Pump, Turbocharger Troubleshooting – Continued.

ITEM	MALFUNCTION	POSSIBLE CAUSES	CORRECTIVE ACTION
2	HP Pump P-5 starts and then stops. HP Pump P-6 does not start. Red stop push button light is not on.		Open the PDP. Set the main breaker to ON. Open the OCP display panel to expose the sub-panel (WP 0021). Start up normally. Push HP Pump start (do not hold).
		Failure of PLC Slot #4 Output card or failure of motor contactor M505 - actuating coil.	If contactor M505 does not pull in after a 10-second delay: 1) Open the Slot #4 wire-way cover. Locate the O4 terminal. Push the start button again. Check for AC 110 volts between O4 and ground after a 10-second delay 2) If voltage is not found at terminal, O4, replace the Slot #4 output card (WP 0021). 3) If voltage is found, replace the M505 contactor (WP 0020).
		Failure of PLC Slot #2 Input card or failure of motor contactor M505 auxiliary contacts.	If the contactor pulls in momentarily and then drops out, find the PLC Slot #2 card. 1) Open the Slot #2 wire-way cover. Locate the IN12 terminal. Push the HP Pump start button. Check for AC 110 volts between IN12 and ground during the momentary time when the contactor pulls in. 2) If voltage is not found at terminal IN12, replace the M505 contactor (WP 0020). 3) If voltage is found, replace the Slot #2 card (WP 0021).
3	HP Pump P-5 starts, HP pump P-6 begins to start, both pumps stop and red stop push button light comes on. or HP Pumps will not start, or stop after running. Red stop push button light is on.	HP Pump P-5 or P-6 circuit breaker has tripped.	Open PDP and check CB122 and CB125 circuit breakers. Reset as needed. If it trips again, check for shorts. Be sure that the power source is secured (WP 0024). 1) Open the motor terminal box and disconnect the power cable wires. Check for short in the cable and in the motor. If in the motor, replace the HP Pump motor (WP 0014). 2) If in the cable, pull all of the wires and inspect. Replace the shorted wire and any wire showing signs of damage. 3) If the motor or cable do not show a short, replace the circuit breaker (WP 0024).

Table 8. High Pressure Pump, Turbocharger Troubleshooting – Continued.

ITEM	MALFUNCTION	POSSIBLE CAUSES	CORRECTIVE ACTION
3 cont.	HP Pump P-5 starts, HP pump P-6 begins to start, both pumps stop and red stop push button light comes on. or HP Pumps will not start, or stop after running. Red stop push button light is on (continued).	Contactor M504 or 505 Thermal Overload has tripped.	Shut down to standby. Open the PDP and locate contactors M504 and 505. Note which overload is tripped by the small red indicator next to the blue reset button. Push in the Blue overload reset button (WP 0024). Close the PDP and start the pumps again. If the failure repeats: 1) Open the PDP. Leave the main CB OFF. Check for loose wires. Check by pulling on the wire with nose plyers. • At the top of the contactor • At the bottom of the thermal overload. • At EMP shunts V122, 123 and 124 for pump P-5 or V125, 126 and 127 for pump P-6. 2) Push the contactor in by hand and hold. Check for continuity between the top and bottom connections. If not found on all legs, replace the contactor and thermal overload (WP 0024) 3) Open the connection box on the motor and check for loose wires. 4) If the fault is not identified, loosen the pump/motor coupling halves and dissengage the couplings from the rubber driver (WP 0014). • If the motor does not turn freely, replace the motor (WP 0014). • If it does, remove the pump, dissassemble and inspect for damage (WP 0014) 5) If no other fault is found, replace the motor associated with the tripped overload. (WP 0014).
4	One HP Pump will not run or stops after running. Green Run light is on. Red stop push button light is NOT on.	At first start up, circuit breaker CB122 or CB125 manually set to OFF position (black handle down). Failure of motor contactor M504 or M505 – main contacts corroded.	Set CB to On position (black handle up). Open the PDP. Set the Main breaker to ON. Follow the normal start-up steps up to starting the HP pumps. Push the High Pressure Pump start button. Check the voltage between the contactor output terminals and ground. If one or more do not show voltage, replace the contactor (WP 0024).

Table 8. High Pressure Pump, Turbocharger Troubleshooting – Continued.

ITEM	MALFUNCTION	POSSIBLE CAUSES	CORRECTIVE ACTION
4 cont.	One HP Pump will not run or stops after running. Green Run light is on. Red stop push button light is NOT on (continued).	Electrical wiring or motor failure.	Set the Main Circuit Breaker to OFF. Open the motor terminal box and remove the insulators from the wire connections. With the wires spread apart, set the Main Circuit Breaker to ON. Follow the normal start-up steps up to starting the HP pumps. Push the HP Pump Start button. Measure the voltage from each phase wire to ground. 1) If voltage is found at all three, replace the motor (WP 0014). 2) If voltage is not found at a wire, troubleshoot the wire run for the location of the open circuit.
5	Operating RO Feed Flow less than 52 gpm but over 48 gpm.	Worn HP Pump valves. Worn HP Pump pistons and or seals.	Replace valves (WP 0014). Replace pistons and seals (WP 0014).
6	Operating RO Feed Flow less than 48 gpm.	Failed reject flow sensor FE-401 or transmitter FT-401. Failed product flow sensor FE-501 or transmitter FT-501.	See instrument troubleshooting (WP 0037, TM 10-461-309-10).
7	RO Feed Pressure and product flow are low even with Main Pressure Control Valve V401 closed.	Failed Turbocharger thrust bearing, turbocharger not rotating.	Check HP pump discharge pressure PI-301. If this pressure is significantly higher than the RO Feed Pressure, the turbocharger bearing has failed. Replace the bearing and rotor (WP 0013).
8	HP Pumps Run Rough, increased pulsation.	Worn valves. Worn pistons and/or seals.	Replace HPP valves (WP 0014). Replace HPP pistons and seals (WP 0014 2000 Hour High Pressure Pump PMCS).
9	Leakage from HP pump body segment.	Worn O-rings.	Replace HPP defective O-rings (WP 0014 2000 Hour High Pressure Pump PMCS).
10	Excessive leakage from the HP pump/motor adapter drain tubing.	Worn shaft seal or damaged cam surfaces.	Replace worn HPP shaft seal and/or cam (WP 0014 2000 Hour High Pressure Pump PMCS).
11	HP pump relief valve RV-301 is relieving or leaking.	Failed turbocharger thrust bearing, turbocharger not rotating. Relief valve out of adjustment or leaking seat.	Check HP pump discharge pressure PI-301. If this pressure is significantly higher than the RO feed pressure, the turbocharger bearing has failed. Replace the bearing and rotor (WP 0013). Replace.

TACTICAL WATER PURIFICATION SYSTEM (TWPS) TROUBLESHOOTING PROCEDURES FIELD TROUBLESHOOTING PROCEDURES – TACTICAL WATER PURIFICATION SYSTEM (TWPS)

THIS SECTION COVERS:
Air System

INITIAL SETUP:
TWPS Operating
Maintenance Level
Field

AIR SYSTEM MALFUNCTIONS

Table 9. General Air System Troubleshooting.

ITEM	MALFUNCTION	POSSIBLE CAUSES	CORRECTIVE ACTION
1	System pressure gauge PI-902 reading less than 975 psig and compressor continues to run without increasing the pressure to the shut-off pressure or compressor fails to reach shut-off pressure between backwashes.	High-pressure air (PI-902) set too high. Excessive air consumption.	If PI-902 reads over 110 psig, adjust PRV-901 to reduce pressure to about 100 psig (WP 0044, TM 10-461-309-10).
		System air leakage.	Shut down to standby. Stop air compressor and listen for leaks. Note: Leakage at Filtrate Flow Control Valve V-202 Positioner and at IP Transducer FY-102 on the Feed Flow Control Panel is normal.
		Oil/Water Coalescer C-O1 automatic drain solenoid valve XV-911 leaking.	Continue operation using manual Coalescer C-O1 Drain Shutoff Valve V-902. Open and close at 15-minute intervals. Replace XV-911 solenoid valve during next routine maintenance cycle (WP 0015).
		Compressor Intermediate Filter Automatic Drain Valve XV-910 leaking.	Continue operation using manual Compressor Intermediate Filter Drain Valve V-901. Open and close at 15-minute intervals. Replace XV-910 solenoid valve during next routine maintenance cycle (WP 0015).
		HP Air Vent Valve V-904 (on Air Purification Filter AF-2) leaking.	Ensure HP Air Vent Valve V-904 is completely closed. Replace HP Air Vent Valve V-904 if still leaking (WP 0015).
		Relief valve RV-901 (on Coalescer CO-1) leaking	Relief valve is factory set. Replace relief valve if found to be leaking (WP 0015).
		Relief valve RV-902 (in Air System Section 1) leaking.	Manually vent RV-902 and release to see if it resets and seals. If this doesn't work, check PRV-901 adjustment (WP 0044, TM 10-461-309-10). If this still doesn't correct the problem, replace RV-902 (WP 0015).
		LP Air Vent Valve V-910 (in Air System Section 6) leaking.	Ensure LP Air Vent Valve V-910 is completely closed. Replace LP Air Vent Valve V-910 if closed and leaking (WP 0016).
		LP Air Vent Valve V-915 (in Air System Section 3) leaking.	Ensure LP Air Vent Valve V-915 is completely closed. Replace valve if closed and still leaking.

Table 9. General Air System Troubleshooting - Continued.

ITEM	MALFUNCTION	POSSIBLE CAUSES	CORRECTIVE ACTION
1 cont	System pressure gauge PI-901 reading less than 975 psig and compressor continues to run without increasing the pressure to the shut-off pressure or compressor fails to reach shut-off pressure between backwashes (continued).	Leaking air tubing or connections.	Check tubing for leaks at connections. Push in to re-establish connection. If unable to repair leak, bleed the air system (WP 0044, TM 10-461-309-10) then replace leaking tubing and fittings (WP 0045 or WP 0027).
		Leaking air piping or hoses.	Bleed the air system (WP 0044, TM 10-461-309-10) then remove the leaking fitting, replace the thread tape and re-install. Replace leaking hose (WP 0045 or WP 0027).
		Leaking tubing or connections inside the Instrument/Solenoid Panel Box.	Open the instrument panel outer and inner doors. Check for leaks. Repair as needed.
		Leaking solenoid valve XV-901, XV-902 or XV-903.	Stop the air compressor. Feel each of the three solenoid valves. If vibrating, it may be leaking. Replace the valve (WP 0016).
		Air compressor safety valve on the second stage head is relieving.	Feel for air flow from the safety valve on top of the second stage head with the compressor on. If flow is noted, replace all three compressor valve assemblies (WP 0017).
		Leaking air compressor valves.	Replace valve assemblies (WP 0017).
2	Air system pressure regulation pressure gauge PI-902 is reading less than 90 psig. Pressure gauge PI-901 readings are normal.	Defective pressure gauge PI-902.	Bleed system air pressure (V-910) with V-907 closed. If the gauge reading does not move, or does not return to zero, replace the gauge (WP 0015).
		Pressure regulating valve PRV-901 (in Air System Section 1) out of adjustment or malfunctioning.	Adjust the pressure regulating valve to provide a 100 psig reading at PI-902 (WP 0044, TM 10-461-309-10). If unable to correct by adjusting valve, replace the valve (WP 0016).
3	Pressure gauge PI-903 pressure reading is not 15 psig.	Defective pressure gauge PI-903.	Bleed system air pressure (V-915). If the gauge reading does not move, or does not return to zero, replace the gauge (WP 0016).
		Pressure regulating valve PRV-902 out of adjustment.	Open V-915 slightly to bleed low pressure air. While bleeding low pressure air, adjust pressure-regulating valve PRV-902 to provide a 15 psig reading at PI-903 (WP 0044, TM 10-461-309-10). If unable to correct by adjusting valve, replace the PRV-902 (WP 0016).
4	Compressor stops below 950 psig. Compressor switch light is OFF.	Defective pressure gauge PI-901.	Bleed system air pressure (V-910) with V-907 closed. If the gauge reading does not move, or does not return to zero, replace the gauge (WP 0016).
		Pressure Switch PSL/PSH-901 high pressure shut-off setting out of adjustment.	Adjust Pressure Switch PSL/PSH-901 high-pressure shut-off setting (WP 0044, TM 10-461-309-10).

Table 9. General Air System Troubleshooting – Continued.

ITEM	MALFUNCTION	POSSIBLE CAUSES	CORRECTIVE ACTION
5	At startup, air pressure increases quickly and compressor cycles on/off.	Air Receiver Tank Outlet Valve V-907 closed.	Open Air Receiver Tank Outlet Valve V-907.
6	At first start-up or start-up after replacing air purification filter AF-2, severe air leak noise is heard at the bottom of the filter.	Filter not installed or not pushed down to seat the O-ring.	Stop the air compressor. Close Receiver Tank Outlet Valve V-907. Open High Pressure Air Vent Valve V-904 to release the pressure. Remove the AF-2 filter cover. Install filter if missing. Check to make sure the filter is pushed down and you feel a definite engagement of the O-ring (WP 0044, TM 10-461-309-10).

Table 10. Air Compressor Troubleshooting.

ITEM	MALFUNCTION	POSSIBLE CAUSES	CORRECTIVE ACTION
1	Compressor does not start with switch in Auto and no pressure. Switch light is ON. or Compressor was running and stopped at a pressure well below 975 psig. Switch light is ON.	CB133 circuit breaker tripped.	Open PDP and check CB133 circuit breaker. Reset as needed. If it trips again, check for shorts. Be sure that the power source is secured. 1) Open the compressor motor terminal box and disconnect the power cable wires. Check for short in the cable and in the motor. If in the motor, replace the motor (WP 0017). 2) If in the cable, pull all of the wires and inspect. Replace the shorted wire and any wire showing signs of damage. 3) If the motor or cable do not show a short, replace the circuit breaker (WP 0024).
		Thermal overload on contactor M510 tripped.	Push in blue button on contactor M510. If the red switch light is still on when the main circuit breaker is switched back to ON, the compressor high temperature switch has tripped (see below). If cleared and the thermal overload continues to trip: 1) Check the compressor oil. If low, the compressor may be beginning to seize. 2) Loosen the drive belt (WP0056). • If the compressor shaft turns hard, replace the compressor (WP 0017). • If the motor shaft turns hard, replace the motor. 3) Open the PDP. Check for loose wires • At the top of the contactor • At the bottom of the thermal overload. • At EMP shunts V133, 134 and 135 4) Push the contactor in by hand and hold. Check for continuity between the top and bottom connections. If not found on all legs, replace the contactor and thermal overload (WP 0024) 5) Open the connection box on the motor and check for loose wires. 6) If the fault is not identified, replace the motor.
		Compressor high temperature switch has tripped.	Allow compressor to cool. Be sure that the air flow is not obstructed. Check the oil level. After cooling, toggle RESET and start compressor. 1) Check the oil sight glass for air. Bleed as needed (WP 0044, TM 10-461-309-10). 2) If this occurs after motor replacement, check rotation.

Table 10. Air Compressor Troubleshooting – Continued.

ITEM	MALFUNCTION	POSSIBLE CAUSES	CORRECTIVE ACTION
1 cont.	Compressor does not start with switch in Auto and no pressure. Switch light is ON. or Compressor was running and stopped at a pressure well below 975 psig. Switch light is ON. (Continued)	Compressor high temperature switch has failed.	If the Reset does not clear the light after the compressor has cooled to the touch, the temperature switch has failed. Remove the wire from terminal IN7 on the Slot #2 input card. Tape the end of the wire and leave disconnected. Replace the switch and reconnect the wire when available (WP 0017)
		Oil pump or oil pressure regulator has failed.	If the Reset does clear the light after cooling, check the lubricating oil pressure. If pressure is low, replace the pressure regulator and oil pump (WP 0017).
2	Compressor does not start with switch in Auto and no pressure in the air system. Switch light is OFF. Or Compressor was running and stopped at a pressure well below 975 psig. Switch light is OFF.	Failure of Pressure Switch PSL/PSH-901 low pressure turn-on switch or PLC Slot #2 Input card.	Open OCP display panel to expose the sub-panel (WP 0021). Set Main CB to ON. Check that Slot #2 LED lights. If channel 15 is not ON: 1) Open the Slot #2 wire-way cover. Locate the IN15 terminal. Check for AC 110-volts between IN15 and ground. 2) If voltage is found, replace the Slot #2 Input card. 3) If voltage is not found, replace the pressure switch (WP 0015).
		Failure of PLC Slot #4 Output card or failure of motor contactor M510 actuating coil.	Open OCP display panel to expose the sub-panel (WP 0021). Open the PDP door and turn the Main Circuit Breaker to the ON position. Locate the contactor and set the compressor switch to OFF and then to ON. If the contactor does not pull in: 1) Open the Slot #4 wire-way cover. Locate the O9 terminal. Check for AC 110-volts between O9 and ground (WP 0021). 2) If voltage is found, replace the motor contactor (WP 0024). 3) If voltage is not found, replace the Slot #2 Input card (WP 0021).
		Failure of PLC Slot #2 Input card or motor contactor auxiliary relay.	If the contactor pulls in, find the PLC Slot #2 card. If channel 14 is OFF: 1) Open the Slot #2 wire-way cover. Locate the IN14 terminal. Check for AC 110-volts between IN14 and ground. 2) If voltage is found, replace the Slot #2 Input card (WP 0021). 3) If voltage is not found, replace the motor contactor (WP 0024).

Table 10. Air Compressor Troubleshooting – Continued.

ITEM	MALFUNCTION	POSSIBLE CAUSES	CORRECTIVE ACTION
2 cont.	Compressor does not start with switch in Auto and no pressure. Switch light is OFF. Or Compressor was running and stopped at a pressure well below 975 psig. Switch light is OFF (continued).	 At first start up, circuit breaker CB133 manually set to OFF position (black handle down). Motor contactor M510 failure – corroded main contacts. Electrical wiring or compressor motor failure.	Continuing, if channel 14 is ON: Set CB to On position (black handle up). Open the PDP. Set the Main breaker to ON. Set the air compressor switch to Auto. Check the voltage between the contactor output terminals and ground. If one or more do not show voltage, replace the contactor (WP 0024). Set the Main Circuit Breaker to OFF. Open the motor terminal box and remove the insulators from the wire connections. With the wires spread apart, set the Main Circuit Breaker to ON and set the Air Compressor switch to AUTO. Measure the voltage from each phase wire to ground. 1) If voltage is found at all three, replace the compressor motor (WP 0017). 2) If voltage is not found at a wire, troubleshoot the wire run for the location of the open circuit.
3	Safety valves between individual stages releasing pressure.	Stage head valves not closing properly.	If the safety valve on the 2nd stage head is releasing, replace the 1st stage valve head. If the safety valve on the intermediate filter is releasing, replace the 2nd stage valve head (WP 0017).
4	No flow observed in pressurized oil sight glass after oil change.	Air trapped in oil pump.	Bleed lubrication system (WP 0044, TM 10-461-309-10).
5	Pressurized oil sight glass exhibits air bubbles after oil change.	Air trapped in pressurized oil system.	Bleed lubrication system (WP 0044, TM 10-461-309-10).
6	Oil is foamy and milk colored.	Water in the oil from worn cylinder rings.	Change the oil. Continue operation. Replace compressor when time allows (WP 0017).
7	High oil consumption.	Cylinder rings worn.	Continue operation. Replace compressor when time allows (WP 0017).
8	Air compressor has no oil pressure.	Air trapped in oil pump.	Bleed lubrication system (WP 0044, TM 10-461-309-10).
9	Drive belt has rolled over	Loose or worn belt Loose motor mount	Replace belt and tighten (WP 0017). Check motor mount. Check motor mounting plate bolts. Be sure they are tight. If loose, be sure that the motor and compressor sheaves are aligned (WP 0017).

TACTICAL WATER PURIFICATION SYSTEM (TWPS) TROUBLESHOOTING PROCEDURES FIELD TROUBLESHOOTING PROCEDURES – TACTICAL WATER PURIFICATION SYSTEM (TWPS)

THIS SECTION COVERS:

Chemical Injection System

INITIAL SETUP:
TWPS Set Up
Maintenance Level
Field

CHEMICAL SYSTEM MALFUNCTIONS

Table 11. Chemical System Troubleshooting.

ITEM	MALFUNCTION	POSSIBLE CAUSES	CORRECTIVE ACTION
1	Chemical pump runs but will not prime.	Output dials not set properly.	Always prime pump with speed at 80% and stroke at 80%.
		Four-function valve not set properly.	Black priming knob must be turned 1/4 – turn to pull it outward.
		Foot valve not in semi-vertical position on the bottom of the chemical tank.	Foot valve must be in vertical or semi-vertical position.
		Clogged foot valve screen.	Remove and clean foot valve screen (WP 0018)
		Suction or discharge fittings are over-tightened into pump head.	Loosen fittings slightly. If still not working, replace suction or discharge valve assemblies (WP 0018).
		Suction cartridge valve leaking.	Replace suction valve assembly (WP 0018).
		Pump diaphragm ruptured.	Replace pump diaphragm (WP 0018).
2	Chemical pump loses prime.	Chemical bucket level has dropped below the suction screen.	Refill container with solution and re-prime 10-4610-309-10/TM10802A/-OI/1A VOL 1 (WP 0014).
		Foot valve not in semi-vertical position on the bottom of the chemical tank.	Foot valve must be in vertical or semi-vertical position.
		Clogged foot valve screen.	Remove and clean foot valve screen (WP 0018).
		Suction or discharge fittings are over-tightened into pump head.	Loosen fittings slightly. If still not working, replace O-rings.
		Suction cartridge valve leaking.	Replace suction valve assembly (WP 0018).
		Pump diaphragm ruptured.	Replace pump diaphragm (WP 0018).
3	Leakage at chemical pump suction, discharge, or return tubing.	Worn tubing ends.	Cut about one inch off tubing and reconnect.
		Loose or cracked coupling nut.	Replace suction, discharge, or four-function valve assembly (WP 0018).
		Worn valve O-rings.	Replace suction, discharge, or four-function valve assembly (WP 0018).

Table 11. Chemical System Troubleshooting – Continued.

ITEM	MALFUNCTION	POSSIBLE CAUSES	CORRECTIVE ACTION
4	Low output or failure to pump against pressure.	Worn chemical pump suction or discharge O-rings or cartridge valves.	Replace suction or discharge valve assembly (WP 0018).
		Ruptured Liquifram diaphragm.	Replace Liquifram diaphragm (WP 0018).
		Incorrect stroke length.	Increase stroke until the correct flow it noted.
		Clogged foot valve screen.	Remove foot valve screen and clean (WP 0018).
		Pump suction tube plugged or loose	Check suction tube. If plugged, replace. If loose, tighten.
		Discharge tube or Injection check valve assembly plugged	Check discharge tube. If plugged, replace. Inspect check ball, seat, and O-ring. If dirty, clean. Replace injection check valve assembly if necessary. (WP 0018)
		Plugged or defective four function valve	Remove four function valve and run pump. If pump works satisfactorily, replace four function valve (WP 0018).
5	Bisulfite Pump CP-1 will not run with selector switch in ON position.	Speed switch is in OFF position.	Set speed switch to 70%.
		Failure of Bisulfite Pump selector switch or PLC Slot #2 Input card.	Open OCP display panel to expose the sub-panel (WP 0021). Check the Slot #2 LED lights. If channel 2 is not ON: 1) Open the Slot #2 wire-way cover. Locate the IN2 terminal. Check for AC 110-volts between IN2 and ground. 2) If voltage is found, replace the Slot #2 Input card (WP 0021). 3) If voltage is not found, replace the Bisulfite Pump selector switch (WP 0020).
		Failure of the PLC Slot #4 output card.	Continuing. If the Slot #2 Channel 2 light is ON: 1) Open the slot #4 wire-way cover. Locate the O6 terminal. Check for AC 110-volts between O6 and ground. 2) If voltage is not found, replace the Slot #4 output card (WP 0021).

Table 11. Chemical System Troubleshooting – Continued.

ITEM	MALFUNCTION	POSSIBLE CAUSES	CORRECTIVE ACTION
5 cont.	Bisulfite Pump CP-1 will not run with selector switch in ON position (continued).	Failure of the PLC Slot #4 output card (continued). Chemical pump motor, wiring or connector failure.	If voltage is found, continue: 1) Check the connections in the junction box. Repair as needed. 2) With electrical power and the pump selector switch ON, check for voltage at the junction box. If voltage is not found, troubleshoot the wiring for open circuits. 3) If voltage is found, replace the pump (WP 0018).
6	Bisulfite Pump CP-1 will not run with selector switch in AUTO position.	Speed switch is in OFF position. Failure of Bisulfite Pump selector switch or PLC Slot #2 Input card. Failure of the PLC Slot #4 output card. Chemical pump motor, wiring or connector failure.	Set speed switch to 70%. Open OCP display panel to expose the sub-panel (WP 0021). Check the Slot #2 LED lights. If channel 1 is not ON: 1) Open the slot #2 wire-way cover. Locate the IN1 terminal. Check for AC 110-volts between IN1 and ground. 2) If voltage is found, replace the Slot #2 Input card (WP 0021). 3) If voltage is not found, replace the Bisulfite Pump selector switch (WP 0020). Continuing. Raw water pump P-2 must be ON. If the Slot 2 Channel 1 light is ON: 1) Open the Slot #4 wire-way cover. Locate the O6 terminal. Check for AC 110-volts between O6 and ground. 2) If voltage is not found, replace the Slot #4 output card (WP 0021). If voltage is found, continue: 1) Check the power connector on the cord and in the junction box. Repair as needed. 2) With electrical power and the pump selector switch ON, check for voltage at the junction box pins. If voltage is not found, troubleshoot the wiring for open circuits. 3) If voltage is found, replace the pump (WP 0037).
7	Antiscale Pump CP-2 or hypochlorite Pump CP-3 will not run with the selector switch in the ON position.	Speed switch is in OFF position. Failure of Antiscale/Chlorine Pump selector switch or PLC Slot #2 Input card.	Set speed switch to 70%. Open OCP display panel to expose the sub-panel (WP 0021). Check the Slot #2 LED lights. If channel 3 is not ON: 1) Open the Slot #2 wire-way cover. Locate the IN3 terminal. Check for AC 110-volts between IN3 and ground.

Table 11. Chemical System Troubleshooting – Continued.

ITEM	MALFUNCTION	POSSIBLE CAUSES	CORRECTIVE ACTION
7 cont	Antiscalant Pump CP-2 or hypochlorite Pump CP-3 will not run with the selector switch in the ON position (continued).	Failure of Antiscale/Chlorine Pump selector switch or PLC Slot #2 Input card (continued).	2) If voltage is found, replace the Slot #2 Input card (WP 0021). 3) If voltage is not found, replace the Antiscale/Chlorine Pump selector switch (WP 0020).
		Failure of the PLC Slot #4 output card.	Continuing. If the Slot 2 Channel 3 light is ON: 1) Open the Slot #4 wire-way cover. Locate the O7 terminal (CP-2 failure) or the O8 terminal (CP-3 failure). Check for AC 110-volts between O7 or O8 and ground. 2) If voltage is not found, replace the Slot #4 output card (WP 0021).
		Chemical pump motor, wiring or connector failure.	If voltage is found, continue. 1) Check the power connector on the cord and in the junction box. Repair as needed. 2) With electrical power and the pump selector switch ON, check for voltage at the junction box pins. If voltage is not found, troubleshoot the wiring for open circuits. 3) If voltage is found, replace the pump (WP 0018).
8	Antiscalant Pump CP-2 or hypochlorite Pump CP-3 will not run with the selector switch in the AUTO position.	Failure of the PLC Slot #4 output card.	With the TWPS operating normally with the HP pumps on, open the OCP display panel to expose the sub-panel (WP 0021). 1) Open the Slot #4 wire-way cover. Locate the O7 terminal (CP-2 failure) or the O8 terminal (CP-3 failure). Check for AC 110-volts between IO7 or O8 and ground. 2) If voltage is not found, replace the Slot #4 output card (WP 0021).
		Chemical pump motor, wiring or connector failure.	If voltage is found, continue. 1) Check the power connector on the cord and in the junction box. Repair as needed. 2) With electrical power and the pump selector switch ON, check for voltage at the junction box pins. If voltage is not found, troubleshoot the wiring for open circuits. 3) If voltage is found, replace the pump (WP 0018).

TACTICAL WATER PURIFICATION SYSTEM (TWPS) TROUBLESHOOTING PROCEDURES FIELD TROUBLESHOOTING PROCEDURES – TACTICAL WATER PURIFICATION SYSTEM (TWPS)

THIS SECTION COVERS:

Product Water Distribution System

INITIAL SETUP:
TWPS Set Up
Maintenance Level
Field

PRODUCT WATER SYSTEM MALFUNCTIONS

Table 12. Product Water System Troubleshooting.

ITEM	MALFUNCTION	POSSIBLE CAUSES	CORRECTIVE ACTION
1	P-7 or P-8 Pump is rotating but is not pumping water.	Pump is air bound. Worn pump impeller or wear plate.	Remove the distribution hose at the Adaptor A-08 valve and open the valve to release the air. Adjust clearance between the impeller and the wear plate. If severely worn, replace impeller and wear plate (WP 0019).
2	Pump P-7 or P-8 runs noisy or rough.	Noise is at the pump: shaft clamp is loose, impeller is rubbing on wear plate. Noise is at the motor (P-7 only): worn bearings.	Check clearance between impeller and wear plate. Adjust as needed. Be sure shaft clamp is tight (WP 0019). Replace the motor (WP 0019).
3	Distribution Pump P-7 will not run or stops after running. Green Run light is on. Red stop push button light is NOT on.	At first start up, circuit breaker CB128 manually set to OFF position (black handle down). CB128 ground fault breaker has tripped. **WARNING** **Electrical Safety. The TWPS unit must be shut down and the Main Circuit Breaker set to OFF prior to disconnecting the power cable. Failure to observe this warning may result in serious injury or death.**	Set CB to On position (black handle up). Open the PDP. Locate the distribution pump P-7 CB128 ground fault breaker. If the blue lever is down, push it up to reset. If the breaker trips again, isolate the fault as follows: 1) Set the Main Circuit Breaker to OFF. Remove the power cable at the PDP. Check and clean the PDP connector pins. Install the connector cap. Set the Main Circuit Breaker to ON. Push the Start button. If the breaker trips, replace the circuit breaker. 2) Set the Main Circuit Breaker to OFF. Disconnect the power cable at the pump. Reconnect the cable at the PDP. Cap the cable connector and lay the cable end over the pump frame. Set the Main Circuit Breaker to ON. Push the start button. If the breaker trips, clean the cable connector pins. Repeat the test. If the breaker trips, replace the cable.

Table 12. Product Water System Troubleshooting – Continued.

ITEM	MALFUNCTION	POSSIBLE CAUSES	CORRECTIVE ACTION
3 cont	Distribution Pump P7 will not run or stops after running. Green Run light is on. Red stop push button light is NOT on (continued).	CB128 ground fault breaker has tripped (continued).	3) Set the Main Circuit Breaker to OFF. With the power cable connected, disconnect the cable from the junction box to the motor. Repeat the test. If the breaker trips, clean the junction box connector pins and the inside of the box. Remove any deposites and corrosion. 4) Clean the motor cable connector pins and connect to the junction box. 5) If the breaker continues to trip, replace the motor (WP 0019).
		Damaged or corroded power cable connections.	Remove power cable. Inspect connectors for damage and corrosion. Replace entire cable if damage found. Clean connector pins if corroded.
		Damaged pump power cable.	Test electrical continuity between connector ends. Replace cable if continuity is not observed.
		Corroded pump skid junction box connectors, loose wire inside junction box.	Clean corroded connectors; repair loose wires.
		Failure of M506 motor contactor – main contacts corroded.	Open the PDP. Set the Main breaker to ON. Push the distribution pump start button. Check the voltage between the contactor output terminals and ground. If one or more do not show voltage, replace the contactor (WP 0024).
		Motor windings have failed.	Continuing, if voltage is found, replace motor (WP 0019).
4	Distribution Pump P-7 will not run. Green Run light does not come on or pump stops while operating. Red stop push button light is NOT on.	Failure of Distribution Pump Start button or PLC Slot #1 Input card.	Open OCP display panel to expose the sub-panel (WP 0021). Set Main CB to ON. Push and hold distribution pump start. Check the Slot #1 LED lights. If channel 9 is not ON: 1) Open the Slot #1 wire-way cover. Locate the IN9 terminal. Check for AC 110-volts between IN9 and ground while pushing and holding the start button. 2) If voltage is found, replace the Slot #1 Input card (WP 0021). 3) If voltage is not found, replace the Distribution Pump start button (WP 0020).

Table 12. Product Water System Troubleshooting – Continued.

ITEM	MALFUNCTION	POSSIBLE CAUSES	CORRECTIVE ACTION
4 cont.	Distribution Pump P-7 will not run. Green Run light does not come on or pump stops while operating. Red stop push button light is NOT on (continued).	Failure of PLC Slot #4 Output card or failure of motor contactor M506 actuating coil.	Open the PDP door and turn the Main Circuit Breaker to the ON position. Locate the contactor and push and hold the distribution pump start button. If the contactor does not pull in: 1) Open the Slot #4 wire-way cover. Locate the O5 terminal. Check for AC 110 volts between O5 and ground. 2) If voltage is not found, replace the Slot #4 output card (WP 0021). 3) If voltage is found, replace the contactor (WP 0020).
		Failure of PLC Slot #2 Input card or motor contactor auxiliary relay.	If the contactor pulls in, find the PLC Slot #2 card. If channel 13 is OFF: 1) Open the Slot #2 wire-way cover. Locate the IN13 terminal. Check for AC 110-volts between IN13 and ground while pushing and holding the start button. 2) If voltage is found, replace the Slot #2 Input card (WP 0021). 3) If voltage is not found, replace the motor contactor (WP 0024).
5	Distribution pump P-7 was running, but stops, or fails to start and the RED stop button light is ON.	CB128 motor circuit breaker is tripped.	Open PDP and check circuit breaker CB128 10-4610-309-10/TM10802A-OI/1A VOL 1 (WP 0004). Reset as needed. If it trips again, troubleshoot for short circuits. With the power source secured proceed as follows: 1) Remove the pump power cable at both ends. Check for shorts between pins in the PDP connector. If found, refer to PDP troubleshooting. 2) Check for shorts between power cable connector pins. Replace cable if found. 3) Disconnect the cable between the motor and the junction box. Check for shorts between pump junction box connector pins. If found, repair the junction box. 4) Check the motor cable connector pins for shorts. If found, disconnect the cable from the motor wires and check the pins again. If a short is found, replace the cable 5) Check the motor wires for shorts. If found, replace the motor (WP 0019). 6) If no shorts are found, replace the circuit breaker (WP 0024).

Table 12. Product Water System Troubleshooting – Continued.

ITEM	MALFUNCTION	POSSIBLE CAUSES	CORRECTIVE ACTION
5 cont.	Distribution pump P-7 was running, but stops and the RED stop button light is ON (continued).	Contactor M506 Thermal Overload has tripped.	Shut down to standby. Open the PDP and locate contactor M506 10-4610-309-10/TM10802A-OI/1A VOL 1 (WP 0004). Push in the Blue overload reset button (WP 0024). Close the PDP and start the pump. If noise is heard from the pump, refer to #2 above. If the failure repeats, 1) Check for binding of the motor or pump. If shaft cannot be turned freely by hand, remove the pump from the motor. If the motor shaft will not turn, replace the motor. If the motor shaft turns, complete the dissassembly of the pump, clean the pump, and replace worn parts. After assembly, be sure that the motor shaft turns freely (WP 0019). 2) Open the PDP. Leave the Main CB off. Check for loose wires: • At the top of the contactor • At the bottom of the thermal overload. • At EMP shunts V128, 129 and 130. 3) Push the contactor in by hand and hold. Check for continuity between the top and bottom connections. If not found on all legs, replace the contactor and thermal overload (WP 0024) 4) Open the connection box on the motor and check for loose wires. 5) Open the junction box on the pump skid and check for loose wires. 6) If the fault is not identified, replace the motor (WP 0019).
6	Distribution Pump P-7 leaks water along the shaft.	Worn shaft seal assembly.	Replace pump seal assembly (WP 0019).
7	Distribution Pump P-7 leaks water at the inlet or outlet flange.	Deteriorated inlet flapper assembly or outlet flange gasket.	Replace inlet flapper assembly or outlet flange gasket (WP 0019).

TACTICAL WATER PURIFICATION SYSTEM (TWPS) TROUBLESHOOTING PROCEDURES FIELD TROUBLESHOOTING PROCEDURES – TACTICAL WATER PURIFICATION SYSTEM (TWPS)

THIS SECTION COVERS:
Cold Weather System

INITIAL SETUP:
TWPS Set Up
Maintenance Level
Field

COLD WEATHER SYSTEM MALFUNCTIONS

Table 13. Cold Weather System Troubleshooting.

ITEM	MALFUNCTION	POSSIBLE CAUSES	CORRECTIVE ACTION
1	Diesel heater motor does not start at first start-up.	CB-137 is set to the OFF position.	Open PDP door and locate CB-137. Set the CB to ON if in the OFF position.
		Safety control locked out.	Push and hold red reset button for 120 seconds.
		No power or low voltage at heater.	Check that the heater is plugged in.
		Remote thermostat (if used) improperly set or defective.	Adjust remote thermostat to a higher setting. If heater still does not start, switch the thermostat switch on the electric control box to the “OFF” position. If the heater then functions properly, replace the remote thermostat assembly.
		Fan obstructed by mechanical damage or dirt.	Check fan for dirt. Clean if needed. Check for bent or damaged fan blades. Replace fan blades if damage found (WP 0025).
		Dirty or defective photocell.	Clean the photocell if dirty. Test the photocell and replace if defective. (WP 0025).
		Defective overheat switch.	Test the overheat switch and replace if defective (WP 0025).
		Defective Safety Control	Test the safety control and replace if defective (WP 0025).
		Defective motor relay.	Test the motor relay and replace if defective (WP 0025).
		Defective motor	Replace the motor (WP 0025).
2	Heater will not ignite, but motor runs for a short time.	Fuel tank empty.	Check level of fuel in tank. A minimum of one gallon is required for proper operation.
		Wrong fuel type.	Make sure fuel is one of the following: DF2, DL2, or JP8.
		Water in the fuel.	Check for water in the fuel tank. If water is found, drain the tank and rinse with clean fuel. Remove and rinse the fuel filter with clean fuel (WP 0025). Fill the tank with fresh, clean fuel.

Table 13. Cold Weather System Troubleshooting – Continued.

ITEM	MALFUNCTION	POSSIBLE CAUSES	CORRECTIVE ACTION
2 cont.	Heater will not ignite, but motor runs for a short time (continued).	Air leak at fuel filter.	Check fuel filter for air leaks and tightness of fittings where filter joins fuel line.
		Defective or damaged spark plug.	Remove spark plug from burner head. Visually inspect spark plug for cracks or worn electrodes. Adjust spark plug gap. If the heater still will not ignite, test the spark plug and replace if defective (WP 0025).
		Defective transformer.	Test the transformer and replace if defective (WP 0025).
3	Heater burns but puffs of smoke can be seen; heater will not burn steady; heater burns with odor; heater smokes continuously.	Heater running out of fuel.	Check level of fuel in tank. A minimum of about one gallon is required for proper operation.
		Wrong fuel.	Make sure fuel is one of the following: DF2, DL2, or JP8.
		Water in fuel.	Check for water in the fuel tank. If water is found, drain the tank and rinse with clean fuel. Remove and rinse the fuel filter with clean fuel (WP 0025). Fill the tank with fresh, clean fuel.
		Dirty air filters causing reduced air pressure through nozzle resulting in low fuel flow.	Make sure the air intake is not blocked. Remove and clean air filters (WP 0044).
		Dirty fuel filter.	Replace fuel filter (WP 0025).
		Fuel filter loose.	Check fuel filter for air leaks and for tightness of fittings where filter joins fuel line (WP 0025).
		Dirty fuel nozzle.	Remove and clean the burner head and fuel nozzle (WP 0025).
		Loose output airline between pump and burner head.	Tug airline at both connections to ensure that they are tight (WP 0025).
4	Flames and/or black smoke come out of stack.	Dirty fan.	Clean the fan (WP 0044, TM 10-4610-309-10).
		Air passageway through the heater is blocked.	Make sure that the air passageway through the heater is clear.
		Pump output too high causing too much fuel to be supplied.	Check and adjust pump output pressure (WP 0025).
		Fan loose or improperly located on shaft.	Check and tighten hex screw located on rear of fan hub. Make sure that the fan is in the correct location (WP 0025).
		Bent or damaged fan.	Inspect fan for damage. If damaged, replace the fan (WP 0025).

Table 13. Cold Weather System Troubleshooting – Continued.

ITEM	MALFUNCTION	POSSIBLE CAUSES	CORRECTIVE ACTION
5	Heater cycles intermittently.	Remote thermostat (if used) set too low.	Set remote thermostat to a higher temperature for more even operation.
		Defective remote thermostat (if used).	Set the thermostat switch on the electric control box to the “ON” position. If the heater runs evenly, replace the remote thermostat assembly.
		Defective electrical supply or defective electrical connections.	Make sure the power cord is in good condition.
		Defective overheat switch.	Test the overheat switch and replace if defective (WP 0025).
6	Heater ignites but safety control trips.	Dirty or defective photocell.	Clean the photocell if dirty. Test the photocell and replace if defective (WP 0025).
		Duct overheat switch tripped	Push and hold Red Reset button for 2 minutes. Allow TWPS inside space to cool. Restart. If the heater does not immediately stop, but stops later due to a trip of the safety control, reduce the thermostat setting until the safety no longer trips. Do not run the heater with outside temperature over 40 degrees F.
		Defective overheat switch.	Test the overheat switch and replace if defective (WP 0025).
7	All hose blankets and pump heat collars remain cold with Hose/Pump Heaters switch ON.	Failure of Hose/Pump Heaters switch or PLC slot #1 input card.	Open OCP display panel to expose the sub-panel (WP 0021). Set Main CB to ON. Set the Hose/Pump Heaters switch to ON. Check the Slot #1 LED lights. If channel 13 is not ON: 1) Open the Slot #1 wire-way cover. Locate the IN13 terminal. Check for AC 110-volts between IN13 and ground. 2) If voltage is found, replace the Slot #1 Input card (WP 0021). 3) If voltage is not found, replace the Hose/Pump Heaters switch (WP 0020).
		Failure of PLC Slot #4 Output card or failure of contactor K513 actuating coil.	Set the Hose/Pump Heaters switch OFF and then ON. Listen for the contactor to pull in. If not heard: 1) Open the Slot #4 wire-way cover. Locate the O12 terminal. Check for AC 110 volts between O12 and ground. 2) If voltage is not found, replace the Slot #4 output card (WP 0021). 3) If voltage is found, replace the contactor (WP 0024).

Table 13. Cold Weather System Troubleshooting – Continued.

ITEM	MALFUNCTION	POSSIBLE CAUSES	CORRECTIVE ACTION
8	All hose blankets and pump heat collars connected to the raw water pump junction boxes remain cold.	Circuit breaker CB211or ground fault breaker 211 tripped.	Open PDP and check circuit breaker CB 211 10-4610-309-10/TM10802A-OI/1A VOL 1 (WP 0004). Reset as needed. If it trips again, troubleshoot for short circuits or ground fault. With the Main Circuit breaker OFF, proceed as follows:
		Circuit breaker CB211or ground fault breaker 211 tripped (continued).	1) Remove P-1 pump junction box power cable (if in use). Set breaker to ON and Hose/Pump Heaters switch to ON. If the heater circuit breaker does not trip, troubleshoot the P-1 pump heat trace system for short circuit or ground fault as applicable. Isolate fault as follows: a) Set Pump/Hose Heater switch to OFF. Reconnect power cable. Remove all heater cables. Set switch to ON. If circuit breaker trips, check to junction box and the power cable. b) Connect each of the hose heaters and the pump heating collar in turn to identify the failed heater. For each, set the Pump/Hose Heater switch to OFF. Make the connection. Set the switch to ON. When the circuit breaker trips, the last connected heater is the failed heater. 2) If the heater circuit breaker trips, troubleshoot the P-2 pump heat trace system for short circuit or ground fault as applicable. Isolate fault as follows: a) Set Pump/Hose Heater switch to OFF. Reconnect power cable. Remove all heater cables. Set switch to ON. If circuit breaker trips, check to junction box and the power cable. b) Connect each of the hose heaters and the pump heating collar in turn to identify the failed heater. For each, set the Pump/Hose Heater switch to OFF. Make the connection. Set the switch to ON. When the circuit breaker trips, the last connected heater is the failed heater.
		Open circuit in power cable or connector. Corroded connector.	Check for open circuit or corrosion. Repair/replace as needed.

Table 13. Cold Weather System Troubleshooting – Continued.

ITEM	MALFUNCTION	POSSIBLE CAUSES	CORRECTIVE ACTION
9	All hose blankets and pump heat collars connected to the distribution pump junction boxes remain cold.	Circuit breaker CB207or ground fault breaker 207 tripped.	Open PDP and check circuit breaker CB207. Reset as needed. If it trips again, troubleshoot for short circuits or ground fault. With the Main Circuit breaker OFF, proceed as follows: 1) Remove P-8 pump junction box power cable (if in use). Set breaker to ON and Hose/Pump Heaters switch to ON. If the heater circuit breaker does not trip, troubleshoot the P-8 pump heat trace system for short circuit or ground fault as applicable. Isolate fault as follows: a) Set Pump/Hose Heater switch to OFF. Reconnect power cable. Remove all heater cables. Set switch to ON. If circuit breaker trips, check to junction box and the power cable. b) Connect each of the hose heaters and the pump heating collar in turn to identify the failed heater. For each, set the Pump/Hose Heater switch to OFF. Make the connection. Set the switch to ON. When the circuit breaker trips, the last connected heater is the failed heater. 2) If the heater circuit breaker trips, troubleshoot the P-7 pump heat trace system for short circuit or ground fault as applicable. Isolate fault as follows: a) Set Pump/Hose Heater switch to OFF. Reconnect power cable. Remove all heater cables. Set switch to ON. If circuit breaker trips, check to junction box and the power cable. b) Connect each of the hose heaters and the pump heating collar in turn to identify the failed heater. For each, set the Pump/Hose Heater switch to OFF. Make the connection. Set the switch to ON. When the circuit breaker trips, the last connected heater is the failed heater.
		Open circuit in power cable or connector. Corroded connector.	Check for open circuit or corrosion. Repair/replace as needed.

Table 13. Cold Weather System Troubleshooting – Continued.

ITEM	MALFUNCTION	POSSIBLE CAUSES	CORRECTIVE ACTION
10	All hose blankets and pump heat collars connected to the MF Feed Pump P-3 junction box remain cold.	Circuit breaker CB209 or ground fault breaker 209 tripped.	Open PDP and check circuit breaker CB209. Reset as needed. If it trips again, troubleshoot for short circuits or ground fault. With the Main Circuit breaker OFF, proceed as follows: 1) Remove P-3 pump junction box power cable (if in use). 2) Set breaker to ON and Hose/Pump Heaters switch to ON. 3) If the heater circuit breaker does not trip, troubleshoot the P-3 pump heat trace system for short circuit or ground fault as applicable. Isolate fault as follows: a) Set Pump/Hose Heater switch to OFF. Reconnect power cable. Remove all heater cables. Set switch to ON. If circuit breaker trips, check to junction box and the power cable. b) Connect each of the hose heaters and the pump heating collar in turn to identify the failed heater. For each, set the Pump/Hose Heater switch to OFF. Make the connection. Set the switch to ON. When the circuit breaker trips, the last connected heater is the failed heater.
		Open circuit in power cable or connector. Corroded connector.	Check for open circuit or corrosion. Repair/replace as needed.
11	One heat blanket or pump heating collar remains cold. All others connected to the same junction box are hot.	Failed connector or heat trace cable.	Check the cable for open circuit. Replace if found. Check the junction box connector for open circuit. Check both connectors for corrosion. Repair as needed.

END OF WORK PACKAGE

TACTICAL WATER PURIFICATION SYSTEM (TWPS) TROUBLESHOOTING PROCEDURES FIELD TROUBLESHOOTING - TWPS CONTROL SYSTEMS

0005 00

This work package covers malfunctions of the PLC, displays and instrument systems and miscellaneous control failures not covered in WP 0033, TM 10-4610-309-10 under the various TWPS systems. The malfunctions and troubleshooting procedures are presented in tables as listed.

TABLE 1: PLC PROCESSOR AND POWER SUPPLY MALFUNCTIONS

TABLE 2: OCP DISPLAY AND INSTRUMENT LOOP MALFUNCTIONS

TABLE 3: OCP MISCELLANEOUS CONTROL MALFUNCTIONS

TACTICAL WATER PURIFICATION SYSTEM (TWPS) TROUBLESHOOTING PROCEDURES FIELD TROUBLESHOOTING - TWPS CONTROL SYSTEMS

0005 00

THIS SECTION COVERS:
PLC Processor and Power Supply

INITIAL SETUP:
TWPS Set Up
Maintenance Level
Field
.

PLC AND POWER SUPPLY MALFUNCTIONS

Table 1. PLC Processor and Power Supply Troubleshooting.

ITEM	MALFUNCTION	POSSIBLE CAUSES	CORRECTIVE ACTION
1	All lights and displays are OFF. Power ON light is OFF. Main circuit breaker is ON. E-stop is pulled put. Generator power is established to the TWPS.	Transformer primary or secondary circuit breaker is tripped.	Check primary circuit breaker CB214 and secondary circuit breaker CB216. Reset if tripped. If the breaker trips again after resetting, troubleshoot the 120 VAC circuits for a short.
2	OCP power light is ON. All other lights are OFF. Displays show zeros.	PLC rack power supply fuse blown, or power supply failure.	Open the OCP display panel to expose the sub-panel. Locate the PLC Processor at the left end of the PLC rack. If the POWER light is out, replace the 13-Slot Chassis power supply (WP 0021).
		PLC Processor, power supply or chassis failure.	If the POWER light is ON, the RUN light is OFF and the FLT light is OFF: 1) Turn the Main Breaker to OFF and then to ON. If the problem remains, continue. 2) Insert the PLC Processor key. Toggle from RUN to PROG and back to RUN. 3) If this clears the problem, return to operation. 4) If this does not clear the problem or if the failure repeats, replace the PLC Processor. If replacing the PLC Processor does not clear the problem, replace the 13-Slot Chassis power supply (WP 0021). 5) If the failure still exists, replace the chassis (WP 0021).

Table 1. PLC Processor and Power Supply Troubleshooting – Continued.

ITEM	MALFUNCTION	POSSIBLE CAUSES	CORRECTIVE ACTION
2 cont.	Power light is ON. All other lights are OFF. Displays show zeros (continued).	Failure of analog input slot card 11 or 12 to program.	If the POWER light is ON, the RUN light is OFF and the FLT (fault) light is blinking: 1) Turn the Main Breaker to OFF and then to ON. If the problem remains, continue. 2) Insert the PLC Processor key. Toggle from RUN to PROG and back to RUN. 3) If this clears the problem, return to operation. 4) If this does not clear the problem, check the STATUS LED light on each of the analog input slot cards. If a light is found to be OFF: • Remove the card from the chassis and re-install to be sure proper connection has been made (WP 0021). • If the STATUS LED light remains off, replace the slot card.
		Memory module failure, or input card, or software failure.	If the POWER light is ON, the RUN light is OFF and the FLT light is ON: 1) Turn the Main Breaker to OFF and then to ON. If the problem remains, continue. 2) Insert the PLC Processor key. Toggle from RUN to PROG and back to RUN. 3) If this clears the problem, return to operation. If the failure repeats, continue. 4) Turn the power off. Remove the memory module. Turn the power on. If the FLT light now flashes, replace the memory module (WP 0021). 5) If the FLT (fault) light does not flash, replace each of the analog input cards, , then the PLC processor, then the 13-Slot Chassis power supply and then the chassis one at a time in sequence until the failure is corrected (WP 0021).
3	PLC Battery light is lit.	PLC battery is dead or not installed.	It is not necessary for the TWPS to have a battery in the PLC. Turn off main circuit breaker to de-energize TWPS. Remove the PLC processor Card (see WP 0021). Inspect for battery installation. If the battery is installed, remove and discard. Do not replace the battery, just leave it removed from the processor card. If the battery is not installed, ignore the battery alarm as it is not necessary for the TWPS to have a battery in the PLC.

TACTICAL WATER PURIFICATION SYSTEM (TWPS) TROUBLESHOOTING PROCEDURES FIELD TROUBLESHOOTING - TWPS CONTROL SYSTEMS

THIS SECTION COVERS:
OCP Display and Instrument Loop

INITIAL SETUP:
TWPS Set Up
Maintenance Level
Field
.

OCP DISPLAY AND INSTRUMENT LOOP MALFUNCTIONS

Table 2. OCP Display and Instrument Loop Troubleshooting.

ITEM	MALFUNCTION	POSSIBLE CAUSES	CORRECTIVE ACTION
1	Pilot light fails to light for BIT test. Or Pilot light fails to light when expected.	PLC Slot 6 Output card or light failure.	Open OCP inner panel to expose the sub-panel. Locate the Slot #6 card and the output terminal for the failed light. Perform BIT test “1” where all indicator lamps are lit. Check for AC 110 volts between the terminal and ground. 1) If voltage is not found, replace the Slot #6 output card (WP 0021). 2) If voltage is found, replace the light (WP 0020). Output terminal reference: Standby 0 Run 1 MF Clean 2 Check MF 3 MF Integrity 4 Clean Strainer 5 MF Backwash Cycle Fail 6 MF Backwash Flow Low 7 Air Pressure Low 8 MF TMP High 9 RO Tank Level Low 10 RO Temp High 11 RO Feed Pressure Low 12 RO Operating Pressure High 13 Product TDS High 14 MF Backwash 15 3) If not corrected by light replacement, check the wiring for open circuit.

Table 2. OCP Display and Instrument Loop Troubleshooting - Continued.

ITEM	MALFUNCTION	POSSIBLE CAUSES	CORRECTIVE ACTION
2	Display reads zeros and fails to count up for BIT test (applies to any display except the total product water display. For this display, refer to item 15 below) (continued).	PLC Slot 8, 9 or 10 output card failure or display failure.	With the BIT set to the display test, open the OCP display panel to expose the sub-panel. Locate the output card and output terminal for the failed display. Remove the red wire from the appropriate output terminal and measure the mA (0-20mA range) between the terminal and the wire (WP 0021). 1) If the reading is steadily increasing, replace the display (WP 0020). 2) If the reading is zero or near zero mA, check the wiring for open circuit. If not found, replace the output card (WP 0021). Reference: Slot 8 Feed Water TDS O1 MF Flow O2 MF TMP O3 Slot 9 RO Feed Flow O0 RO Feed Pressure O1 RO Reject Flow O2 RO Feed Tank Level O3 Slot 10 RO % Salt Rejection O0 Product Flow O1 Product TDS O2
3	Display is blank.	Display failure.	Replace display (WP 0020).
4	All displays are blank. All lights function normally in BIT test.	24 VDC circuit breaker CB230 is tripped. 24 VDC instrumentation power supply failure. Power supply on time delay relay K236 failure	Reset if tripped. If it trips again, troubleshoot 24 VDC circuit for shorts (WP 0021). Check the power supply for output voltage. If not at least 20 VDC, replace the instrumentation power supply (WP 0021). Check for voltage between K236 relay socket terminal #1 and ground. If voltage is not found, replace the relay (WP 0021).
5	Feed Water TDS Display does not change as the Feed Water TDS Set dial is changed.	PLC Slot 8 output card failure or display failure. PLC Slot 11 input card or TDS Set dial failure.	Conduct BIT test and stop at the display test. If the display does not count up, refer to Item 2 above. Open the OCP display panel to expose the sub-panel. Locate the Slot 11 input card. Open the wire way cover and locate terminal IN2+ and IN2-. Check for VDC (0-10 VDC) between the terminals (WP 0021). 1) If voltage is noted and it changes as the TDS Set is adjusted, (but the TDS display does not change) replace the Slot 11 input card (WP 0021).

Table 2. OCP Display and Instrument Loop Troubleshooting – Continued.

ITEM	MALFUNCTION	POSSIBLE CAUSES	CORRECTIVE ACTION
5 cont.	Feed Water TDS Display does not change as the Feed Water TDS Set dial is changed (continued).	PLC Slot 11 input card or TDS Set dial failure (continued).	2) If voltage is noted but it does not change as the TDS Set is adjusted, replace the TDS Set Adjust (Precision 10-Turn) potentiometer (WP 0020). 3) If there is no voltage, set the Main breaker to OFF. Remove the wires and check for resistance. 4) If there is an open circuit, replace the TDS Set Adjust (Precision 10-Turn) potentiometer (WP 0020). 5) If resistance is measured and changes as the TDS Set is changed, replace the Slot 11 input card (WP 0021).
6	MF Feed Flow loop measurement error (referenced from WP0034 Table 5, Item 3 and Item 5).	PLC Slot 8 output card failure or display failure. Flow transmitter FT-101or flow sensor FE-101 failure.	Conduct BIT test and stop at the display test. If the display does not count up, refer to Item 2 above. Reconfigure the transmitter if the display is not blank (WP 0043, TM 10-4610-309-10). If this doesn't correct the problem perform the following. With the TWPS operating normally, open the Instrument/Solenoid Panel to observe the flow transmitter. 1) If the display is blank, shutdown to standby. Set the Main breaker to OFF and then back to ON. If the display remains blank after repeating this procedure several times, replace the transmitter (WP 0023). 2) If the WARNING CHECK STATUS message flashes on the display, refer to Flow Loop Status Checking in (WP 0023). 3) If the STATUS: ANALIZER screen indicates FAIL, replace the transmitter (WP 0023). 4) If the STATUS: SENSOR screen indicates FAIL, replace the sensor (WP 0023). 5) If the EPROM ERROR (LOAD DEFAULTS?) message is displayed, follow the procedure to configure the transmitter. (WP 0023). 6) If the display does not change as the MF Feed Flow controls automatically to maintain the RO Feed Tank level, replace the flow sensor. If the problem continues, replace the flow transmitter (WP 0023). 7) If the display is very unsteady while the TWPS is operating normally, replace the flow sensor (WP 0023). 8) If during the shell sweep backwash step the display does not show a rapid increase in flow, or if the flow is less than 200 gpm, replace the flow sensor (WP 0023).

Table 2. OCP Display and Instrument Loop Troubleshooting – Continued.

ITEM	MALFUNCTION	POSSIBLE CAUSES	CORRECTIVE ACTION
6 cont.	MF Feed Flow loop measurement error (referenced from WP 0033, TM 10-4610-309-10 Table 5, Item 3 and Item 5) (cont.).	PLC Slot 11 input card or Flow Transmitter FT-101 output failure.	With the TWPS in STANDBY, open the Instrument/Solenoid Panel and set the flow transmitter output as follows (WP 0023). 1) Press the MAIN MENU key. Use the up/down arrows to display the TEST/MAINT screen. 2) Press ENTER key to display the STATUS screen. 3) Press the down arrow until the OUTPUT screen appears. 4) Press ENTER key to display OUTPUT? XX.XX mA 5) Use the arrows to change the display to 20.00 mA. When the steps below are completed, press MENU and then ESC to return to the normal display screen. Open the OCP display panel to expose the sub-panel. Locate the Slot 11 input card (WP 0021). Open the wire way cover and locate terminal IN 3+. Remove the wire and turn the terminal screw back in. Measure the mA (4-20 mA range) between the terminal and the wire (WP 0021). 1) If the mA reading is 20 mA, and the OCP MF Feed Flow display does not read approximately 390 gpm, replace the Slot 11 input card (WP 0021). 2) If the mA reading is not 19.5 to 20.5, replace Flow Transmitter FT-101(WP 0023).
7	TMP cannot be adjusted to zero (with TWPS properly in STANDBY). Or TMP reading is suddenly very high and the TMP High alarm is on.	PLC Slot 8 output card failure or display failure.	Conduct BIT test and stop at the display test. If the display does not count up, refer to Item 2 above.
		Pressure transmitter PT-101 or 102 failure, or open circuit	With the TWPS operating normally, open the OCP display panel to expose the sub-panel. Locate the Slot 12 input card (WP 0021). 1) Locate the channel “0” status light. If blinking, check the PT101 cable and connector for open circuit. If an open circuit is not found, replace PT-101. 2) Locate the channel “1” status light. If blinking, check the PT-102 cable and connector for open circuit. If an open circuit is not found, replace PT-102.
		Short circuit, Pressure Transmitter PT-101 failure or Slot 12 Input card failure.	Open OCP display panel. Locate the Slot 12 input card on the sub-panel (WP 0021). If module status light is not lit, replace card. 1) Remove IN0+ wire and turn terminal screw back in. Measure the mA (4-20mA range) between the wire and the terminal.

Table 2. OCP Display and Instrument Loop Troubleshooting – Continued.

ITEM	MALFUNCTION	POSSIBLE CAUSES	CORRECTIVE ACTION
7 cont	TMP cannot be adjusted to zero (with TWPS properly in STANDBY). Or TMP reading is suddenly very high and the TMP High alarm is on (continued).		2) If reading is approximately 20mA, perform continuity checks with PDP main breaker OFF. Perform continuity check on wiring from input card to connector pins. Check for short circuit between pins A and B with connector disconnected from transducer and both wires disconnected from input card. Replace cable if short circuit found. If short circuit not found, replace PT-101. 3) If problem re-occurs replace Slot 12 input card.
		Pressure Transmitter PT-102 failure or open circuit failure.	Open the OCP display panel to expose the sub-panel. Locate the Slot 12 input card (WP 0021). If module status light is not lit, replace card. 1) Remove IN1+ wire and turn terminal screw back in. Measure the mA (4-20mA range) between the wire and the terminal 2) If reading is approximately 20mA, perform continuity checks with PDP main breaker OFF. Perform continuity check on wiring from input card to connector pins. Check for short circuit between pins A and B with connector disconnected from transducer and both wires disconnected from input card. Replace cable if short circuit found. 3) If short circuit not found, replace PT-102. 4) If problem re-occurs replace Slot 12 input card.
		PLC Slot 11 input card or MF Transmembrane Zero Adjust dial failure.	Open the OCP display panel to expose the sub-panel. Locate the Slot 11 input card. Open the wire way cover and locate terminal IN1+ and IN1-. Check for VDC between the terminals (WP 0021). 1) If voltage is noted and it changes as the TMP Zero is adjusted, (but the TMP display does not change) replace the Slot 11 input card (WP 0021). 2) If voltage is noted but it does not change as the TMP Zero is adjusted, replace the MF Transmembrane Zero Adjust (1000 Ohm) potentiometer (WP 0020).

Table 2. OCP Display and Instrument Loop Troubleshooting – Continued.

ITEM	MALFUNCTION	POSSIBLE CAUSES	CORRECTIVE ACTION
7 cont	TMP cannot be adjusted to zero (with TWPS properly in STANDBY). Or TMP reading is suddenly very high and the TMP High alarm is on (continued).		3) If there is no voltage, set the Main breaker to OFF. Remove the wires and check for resistance. If there is an open circuit, replace the MF Transmembrane Zero Adjust (1000 Ohm) potentiometer (WP 0020). If resistance is measured and it changes as the MF Transmembrane Zero Adjust is changed, replace the Slot 11 input card (WP 0021).
		PLC Slot 12 input card failure	If other faults have not been indicated, replace the Slot 12 input card (WP 0021).
8	RO Feed Pressure display does not change as the Main Pressure control valve is closed.	PLC Slot 9 output card failure or display failure.	Conduct BIT test and stop at the display test. If the display does not count up, refer to Item 2 above.
		Pressure transmitter PT-302 or PLC Slot 12 input card failure, RO feed pressure reading high.	Open the OCP display panel to expose the sub-panel. Locate the Slot 12 input card (WP 0021). If module status light is not lit, replace card. 1) Remove IN2+ wire and turn terminal screw back in. Measure the mA (4-20mA range) between the wire and the terminal. 2) If reading is approximately 20mA, perform continuity checks with PDP main breaker OFF. Perform continuity check on wiring from input card to connector pins. Check for short circuit between pins A and B with connector disconnected from transducer and both wires disconnected from input card. Replace cable if short circuit found. 3) If short circuit not found, replace PT-302. 4) If problem re-occurs replace Slot 12 input card.
		Pressure transmitter PT-302 or PLC Slot 12 input card failure, RO feed pressure reading low.	Open the OCP display panel to expose the sub-panel. Locate the Slot 12 input card (WP 0021). If module status light is not lit, replace card. 1) Remove IN2+ wire and turn terminal screw back in. Measure the mA (4-20mA range) between the wire and the terminal. 2) If reading is still less than 3.75mA, replace the transmitter (WP 0023). 3) If reading is still less thank 3.75mA after replacing the transmitter, check the connector, cable, and panel wiring for open circuits. Perform these checks with the PDP OFF.

Table 2. OCP Display and Instrument Loop Troubleshooting – Continued.

ITEM	MALFUNCTION	POSSIBLE CAUSES	CORRECTIVE ACTION
8 cont.	RO Feed Pressure display does not change as the Main Pressure control valve is closed (continued).		4) If no open circuits are found and the current reading is still less than 3.75mA with the PDP ON, replace Slot 12 input card.
9	Reject flow reading is not as expected from previous operational data.	PLC slot 9 output card failure or display failure.	Conduct BIT test and stop at the display test. If the display does not count up, refer to Item 2 above.
		Flow transmitter FT-401or flow sensor FE-401 failure.	Reconfigure the transmitter if the display on the instrument panel is not blank (WP 0043, TM 10-4610-309-10). If this doesn't correct the problem perform the following. With the TWPS operating normally, open the Instrument Panel to observe the flow transmitter. 1) If the display is blank, shutdown to standby. Set the Main breaker to OFF and then back to ON. If the display remains blank after repeating several times, replace the transmitter (WP 0023). 2) If the WARNING CHECK STATUS message flashes on the display, refer to Flow Loop Status Checking in (WP 0023). 3) If the STATUS: ANALIZER screen indicates FAIL, replace the transmitter (WP 0023). 4) If the STATUS: SENSOR screen indicates FAIL, replace the sensor (WP 0023). 5) If the EPROM ERROR (LOAD DEFAULTS?) message is displayed, follow the procedure to configure the transmitter (WP 0023). 6) If the reject display on the flow transmitter does not change as the as the product flow is changed, replace the flow sensor (WP 0023). If the problem is not corrected, replace the flow transmitter (WP 0023). 7) If the display is very unsteady while the TWPS is operating normally, replace the flow sensor (WP 0023).
		PLC slot 11 input card or Flow Transmitter FT-401 output failure.	With the TWPS in STANDBY, open the Instrument/Solenoid Panel and set the flow transmitter output as follows (WP 0023): Press the MAIN MENU key. Use the up/down arrows to display the TEST/MAINT screen. 1) Press ENTER key to display the STATUS screen. 2) Press the down arrow until the OUTPUT screen appears. 3) Press ENTER key to display OUTPUT? XX.XX mA

Table 2. OCP Display and Instrument Loop Troubleshooting – Continued.

ITEM	MALFUNCTION	POSSIBLE CAUSES	CORRECTIVE ACTION
9 cont.	Reject flow reading is not as expected from previous operational data (continued).		4) Use the arrows to change the display to 20.00 mA. 5) When the steps below are completed, press MENU and then ESC to return to the normal display screen.
		PLC slot 11 input card or Flow Transmitter FT-401 output failure (continued).	Open the OCP display panel to expose the sub-panel. Locate the Slot 11 input card. Open the wire way cover and locate terminal IN4+. Remove the wire and turn the terminal screw back in. Measure the mA (4-20mA) between the terminal and the wire (WP 0021). 1) If the mA reading is 20 mA, and the flow meter display does not read approximately 50 gpm, replace the slot 11 input card (WP 0021). 2) If the mA reading is not 19.5 to 20.5, replace the transmitter (WP 0023).
10	RO Feed Tank % Level reads 0 with level in the tank, reads a level other than actual by observation, or the reading changes up and down rapidly.	PLC Slot 9 output card failure or display failure.	Conduct BIT test and stop at the display test. If the display does not count up, refer to Item 2 above.
		Level transmitter LT-201 or PLC Slot 12 input card failure, RO feed tank level high.	Open the OCP display panel to expose the sub-panel. Locate the Slot 12 input card (WP 0021). If module status light is not lit, replace card. 1) Remove IN3+ wire and turn terminal screw back in. Measure the mA (4-20mA range) between the wire and the terminal. 2) If reading is approximately 20mA, perform continuity checks with PDP main breaker OFF. Perform continuity check on wiring from input card to connector pins. Check for short circuit between pins A and B with connector disconnected from transducer and both wires disconnected from input card. Replace cable if short circuit found. 3) If short circuit not found, replace LT-201. 4) If problem re-occurs replace Slot 12 input card.
		Level transmitter LT-201 or PLC Slot 12 input card failure, RO feed tank level low.	Open the OCP display panel to expose the sub-panel. Locate the Slot 12 input card (WP 0021). If module status light is not lit, replace card. 1) Remove IN3+ wire and turn terminal screw back in. Measure the mA (4-20mA range) between the wire and the terminal.

Table 2. OCP Display and Instrument Loop Troubleshooting – Continued.

ITEM	MALFUNCTION	POSSIBLE CAUSES	CORRECTIVE ACTION
10 cont.	RO Feed Tank % Level reads 0 with level in the tank, reads a level other than actual by observation, or the reading changes up and down rapidly (continued).	Level transmitter LT-201 or PLC Slot 12 input card failure, RO feed tank level low.	2) If reading is still less than 3.75mA, replace the transmitter (WP 0023). 3) If reading is still less thank 3.75mA after replacing the transmitter, check the connector, cable, and panel wiring for open circuits. Perform these checks with the PDP OFF. 4) If no open circuits are found and the current reading is still less than 3.75mA with the PDP ON, replace Slot 12 input card.
11	RO % Salt Rejection display is very low or very high compared to previous operational data.	Conductivity measurement loop failure. Product flow loop failure. RO Feed Temperature loop failure. Feed TDS loop failure.	The RO % Rejection is calculated from the TDS input, measured conductivity, the product flow and RO Feed Temperature. One or more of these measurement loops has failed. Refer to individual troubleshooting items. Refer to Item 5.
12	Product flow reading is not as expected from previous operational data.	PLC Slot 10 output card failure or display failure. Flow transmitter FT-501or flow sensor FE-501 failure.	Conduct BIT test and stop at the display test. If the display does not count up, refer to Item 2 above. Reconfigure the transmitter if the display inside the instrument panel is not blank (WP 0043, TM 10-4610-309-10). If this doesn't correct the problem perform the following. With the TWPS operating normally, open the Instrument Panel to observe the flow transmitter. 1) If the display is blank, shutdown to standby. Set the Main breaker to OFF and then back to ON. If the display remains blank after repeating several times, replace the transmitter (WP 0023). 2) If the WARNING CHECK STATUS message flashes on the display, refer to Flow Loop Status Checking in (WP 0023). 3) If the STATUS: ANALIZER screen indicates FAIL, replace the transmitter (WP 0023). 4) If the STATUS: SENSOR screen indicates FAIL, replace the sensor (WP 0023). 5) If the EPROM ERROR (LOAD DEFAULTS?) message is displayed, follow the procedure to configure replace the transmitter (WP 0023). 6) If the reject display on the flow transmitter does not change as the product flow is changed, replace the flow sensor (WP 0023). If the problem is not corrected, replace the flow transmitter.

Table 2. OCP Display and Instrument Loop Troubleshooting – Continued.

ITEM	MALFUNCTION	POSSIBLE CAUSES	CORRECTIVE ACTION
12 cont.	Product flow reading is not as expected from previous operational data (continued).		7) If the display is very unsteady while the TWPS is operating normally, replace the flow sensor (WP 0023).
		PLC slot 11 input card or Flow Transmitter FT-501 output failure.	With the TWPS in STANDBY, open the Instrument/Solenoid Panel and set the flow transmitter output as follows (WP 0023). 1) Press the MAIN MENU key. Use the up/down arrows to display the TEST/MAINT screen. 2) Press ENTER key to display the STATUS screen. 3) Press the down arrow until the OUTPUT screen appears. 4) Press ENTER key to display OUTPUT? XX.XX mA 5) Use the arrows to change the display to 20.00 mA. 6) When the steps below are completed, press MENU and then ESC to return to the normal display screen.
		PLC slot 11 input card or Flow Transmitter FT-501 output failure (continued).	Open the OCP display panel to expose the PLC. Locate the slot 11 input card. Open the wire way cover and locate terminal C4+. Remove the wire and turn the terminal screw back in. Measure the mA (4-20mA) between the terminal and the wire (WP 0021). 1) If the mA reading is 20 mA and the flow meter display does not read approximately 32, replace the Slot 11 input card (WP 0021). 2) If the mA reading is not 19.5 to 20.5, replace the transmitter (WP 0023).
13	Product TDS reading is not as expected from previous operational data or not in agreement with portable TDS meter.	Conductivity switch in the OFF position.	Set conductivity switch (on Instrument/ Solenoid Panel) to the ON position.
		Conductivity switch failure.	Check for 110 VAC between the switch outer terminal screw and ground. If not found, replace the switch.
		PLC Slot 10 output card failure or display failure.	Conduct BIT test and stop at the display test. If the display does not count up, refer to Item 2 above.
		Conductivity transmitter CT-501or conductivity sensor CE-501A or 501B failure.	Reconfigure the transmitter if the display is not blank inside the Instrument Panel (WP 0043, TM 10-4610-309-10). If this doesn't correct the problem perform the following. With the TWPS operating normally, open the Instrument/Solenoid Panel to observe the conductivity transmitter. 1) If the display is blank, replace the transmitter (WP 0023). 2) If the WARNING CHECK STATUS message flashes on the display, refer to Conductivity Loop Status Checking in (WP 0023).

Table 2. OCP Display and Instrument Loop Troubleshooting – Continued.

ITEM	MALFUNCTION	POSSIBLE CAUSES	CORRECTIVE ACTION
13 cont.	Product TDS reading is not as expected from previous operational data or not in agreement with portable TDS meter (continued).	Conductivity transmitter CT-501or conductivity sensor CE-501A or 501B failure (continued).	3) If the STATUS: ANALIZER screen indicates FAIL, replace the transmitter (WP 0023). 4) If the STATUS: SENSOR screen indicates FAIL, replace the sensor (WP 0023).
		Conductivity sensor CE-501A or CE-501B failure.	Shut down to STANDBY and drain the product piping. 1) Remove the CE-501A sensor and rinse and place in the low range calibration solution. Note the reading on the transmitter display. 2) Remove the CE-501B sensor and rinse and place in the high range calibration solution. Note the reading on the transmitter display. 3) If the transmitter fails to display the calibration solution conductivity value for both tests, replace the transmitter (WP 0023). 4) If the transmitter fails to display the calibration solution conductivity value for one sensor only, replace the sensor (WP 0023).
		PLC Slot 11 input card or Conductivity Transmitter CT-501 output failure.	With the TWPS in STANDBY, open the Instrument Panel and set the conductivity transmitter output as follows (WP 0023): 1) Press the MAIN MENU key. Use the up/down arrows to display the TEST/MAINT screen. 2) Press ENTER key to display the STATUS screen. 3) Press the down arrow until the OUTPUT 1 screen appears. 4) Press ENTER key to display OUTPUT? XX.XX mA. 5) Use the arrows to change the display to 20.00 mA. 6) When the steps below are completed, press MENU and then ESC to return to the normal display screen. Open the OCP display panel to expose the sub-panel. Locate the slot 11 input card. Open the wire way cover and locate terminal C6+. Remove the wire and turn the terminal screw back in. Measure the mA between the terminal and the wire (WP 0021). 1) If the mA reading is 20mA, replace the Slot 11 input card (WP 0021). 2) If the mA reading is not between 19.5 and 20mA, replace the transmitter (WP 0023). 3) Repeat the complete procedure starting back at the Main Menu for Output 2 and using C7+ for mA measurements.

Table 2. OCP Display and Instrument Loop Troubleshooting – Continued.

ITEM	MALFUNCTION	POSSIBLE CAUSES	CORRECTIVE ACTION
14	Product totalizer fails to count up when product flow is indicated, or does not display properly during BIT test.	PLC Slot 5 output card, solid state relay display failure.	Conduct BIT test and stop at the display test. If the display does not count up, open the OCP display panel to expose the PLC. Locate the slot 5 output card. Open the wire way cover and locate terminal 14. Measure for 120 VAC between the terminal and ground. (WP 0021) 1) IF a momentary voltage is not measured every 2 to 3 seconds during the BIT test, replace the slot 5 output card. 2) If a momentary voltage is measured, locate the R535 and R536 solid state relays. Remove the R535 relay and replace it with the R536 relay. Repeat the BIT test. If the totalizer works properly, replace the relay. 3) If replacing the relay does not correct the fault, replace the Slot 5 output card.
15	Hour meter fails to run when the HP pumps are running.	Hour meter failure.	Check for voltage at terminal 14 on M504 and M505 with the HP pump running. If not found, replace the hour meter (WP 0020).
16	High Temperature Alarm with temperature at RO Feed Tank temperature gauge (TI-202) much less than 110 degrees F.	Temperature transmitter TT-201 or PLC. Slot 12 Input card failure.	Open the OCP display panel to expose the sub-panel. Locate the Slot 12 input card. Open the wire way cover and locate terminal IN5+. Remove the wire and turn the terminal screw back in. Measure the mA (4-20mA) between the terminal and the wire (WP 0021) 1) If the reading is greater than 9mA, check the cable and panel wiring for short circuits. 2) If no short circuits, replace the temperature transmitter. (WP 0023) 3) If the reading is less than 9mA, replace the Slot 12 card (WP 0021).

THIS SECTION COVERS:
OCP MISCELLANEOUS CONTROL MALFUNCTIONS

INITIAL SETUP:
TWPS Set Up
Maintenance Level
Field
.

OCP MISCELLANEOUS CONTROL MALFUNCTIONS

Table 3. OCP Miscellaneous Control Troubleshooting.

ITEM	MALFUNCTION	POSSIBLE CAUSES	CORRECTIVE ACTION
1	Pushing the TEST button does not start the BIT (display shows 1) after 10-seconds.	(BIT) TEST push button or PLC Slot 3 input card failure.	Open the OCP display panel to expose the sub-panel. Locate the PLC Slot 3 card. Push and hold the Test button. 1) If the channel 8 light comes ON, replace the Slot 3 input card (WP 0021). 2) If the channel 8 light does not come on, check for AC-Volts between terminal 8 and ground. If voltage is found, replace the Slot 3 input card (WP 0021). 3) If voltage is not found, replace the Test push button (WP 0020).
2	Air compressor will not start. Pumps will not start. Green power light is ON. Displays and lights are working.	Emergency Stop 3-Pole Relay K235 or Emergency Stop push button failure.	Open the OCP display panel to expose the sub-panel. Locate the 3-Pole Relay (WP 0021). With the Main Breaker set to ON and the Emergency Stop pulled out, check for AC-Volts between terminal 2 on the base of the relay and ground. 1) If voltage is found, replace the 3-pole relay (WP 0021). 2) If voltage is not found, replace the Emergency Stop push button (WP 0020).
3	MF Clean sequence failures: Failure to backwash with MF Clean switch set to Backwash.	PLC Slot 3 input card or MF Clean (Rotary) Switch failure.	Open the OCP display panel to expose the sub-panel. Locate the Slot 3 card. Set the MF Clean switch to Backwash. 1) If the channel 3 light is ON, replace the Slot 3 input card (WP 0021). 2) If the channel 3 light is OFF, open the wire way and check for AC-Volts between terminal IN3 and ground. If there is voltage, replace the Slot 3 input card (WP 0021). 3) If there is no voltage, replace the MF Clean (Rotary) Switch (WP 0020).

Table 3. OCP Miscellaneous Control Troubleshooting – Continued.

ITEM	MALFUNCTION	POSSIBLE CAUSES	CORRECTIVE ACTION
3 cont	Initial drain failures to occur when MF Clean Switch is set to Drain #1.	SV-903 failure.	Return to standby. Step through the BIT test to the test for SV-903. If the valve fails to operate, refer to (WP 0033, TM 10-4610-309-10), Table 4.
		PLC Slot 3 input card or MF Clean (Rotary) Switch failure.	Open the OCP display panel to expose the sub-panel. Locate the Slot 3 card. Set the MF Clean switch to Drain #1. 1) If the channel 4 light is ON, replace the Slot 3 input card (WP 0021). 2) If the channel 4 light is OFF, open the wire way and check for AC-Volts between terminal IN4 and ground. If there is voltage, replace the Slot 3 input card (WP 0021). 3) If there is no voltage, replace the MF Clean (Rotary) Switch (WP 0020).
	Clean cycle does not automatically start the RO Feed Pump and fill the MF when the MF Clean Switch is set to Fill/Recirc.	PLC Slot 3 input card or MF Clean (Rotary) Switch failure.	Open the OCP display panel to expose the sub-panel. Locate the Slot 3 card. Set the MF Clean switch to Fill/Recirc. 1) If the channel 3 and 4 lights are ON, replace the Slot 3 input card (WP 0021). 2) If the channel 3 or 4 light is OFF, open the wire way and check for AC-Volts between terminals IN3 or IN4 and ground. If there is voltage, replace the Slot 3 input card (WP 0021). 3) If there is no voltage, replace the MF Clean (Rotary) Switch (WP 0020).
	RO Feed Pump does not stop when the MF Clean Switch is set to Soak.	PLC Slot 3 input card or MF Clean (Rotary) Switch failure.	Open the OCP display panel to expose the sub-panel. Locate the Slot 3 card. Set the MF Clean switch to Soak. 1) If the channel 5 light is ON, replace the Slot 3 input card (WP 0021). 2) If the channel 5 light is OFF, open the wire way and check for AC-Volts between terminal IN5 and ground. If there is voltage, replace the Slot 3 input card (WP 0021). 3) If there is no voltage, replace the MF Clean (Rotary) Switch (WP 0020).

Table 3. OCP Miscellaneous Control Troubleshooting – Continued.

ITEM	MALFUNCTION	POSSIBLE CAUSES	CORRECTIVE ACTION
3 cont.	Drain cycle fails to occur when MF Clean Switch is set to Drain #3.	SV-903 failure.	Return to standby. Step through the BIT test to the test for SV-903. If the valve fails to operate, refer to (WP 0033, TM 10-4610-309-10), Table 4.
		PLC Slot 3 input card or MF Clean (Rotary) Switch failure	Open the OCP display panel to expose the sub-panel. Locate the Slot 3 card. Set the MF Clean switch to Fill/Recirc. 1) If the channel 4 and 5 lights are ON, replace the Slot 3 input card (WP 0021).If the channel 4 or 5 light is OFF, open the wire way and check for AC-Volts between terminals IN4 or IN5 and ground. If there is voltage, replace the Slot 3 input card (WP 0021). 2) If there is no voltage, replace the MF Clean (Rotary) Switch (WP 0020).
	Rinse cycle fails to occur when MF Clean Switch is set to Rinse.	PLC Slot 3 input card or MF Clean (Rotary) Switch failure.	Open the OCP display panel to expose the sub-panel. Locate the Slot 3 card. Set the MF Clean switch to Fill/Recirc. 1) If the channel 3, 4 and 5 lights are ON, replace the Slot 3 input card (WP 0021). 2) If the channel 3, 4 or 5 light is OFF, open the wire way and check for AC-Volts between terminals IN3, IN4 or IN5 and ground. If there is voltage, replace the Slot 3 input card (WP 0021). 3) If there is no voltage, replace the MF Clean (Rotary) Switch (WP 0020).
	Drain #2 fails to occur automatically 10-seconds after advancing the switch to the Drain #2 position.	PLC Slot 3 input card or MF Clean (Rotary) Switch failure	Open the OCP display panel to expose the sub-panel. Locate the Slot 3 card. Set the MF Clean Switch to Drain #2. 1) If the channel 3, 3 and 5 lights are ON, replace the Slot 3 input card (WP 0021). 2) If the channel 3, 3 or 5 light is OFF, open the wire way and check for AC-Volts between terminals IN3 or IN5 and ground. If there is voltage, replace the Slot 3 input card (WP 0021). 3) If there is no voltage, replace the MF Clean (Rotary) Switch (WP 0020).

END OF WORK PACKAGE

CHAPTER 3

FIELD MAINTENANCE PROCEDURES

FOR

TACTICAL WATER PURIFICATION SYSTEM (TWPS)

TACTICAL WATER PURIFICATION SYSTEM (TWPS) FIELD MAINTENANCE PROCEDURES SERVICE UPON RECEIPT

0006 00

INITIAL SETUP

Maintenance Level
Field Maintenance
Tools
Army: General Mechanic's Tool Kit (WP 0037)
Marine Corps: Common No. 1 Tool Set (WP 0037)
References
TM 9-6115-672-14
Refer to TM 10-4610-309-10 for operator information
Refer to TM 10-4610-309-23P for repair parts information
Personnel Required
Two
Equipment Condition
TWPS received from user for Field Maintenance.

GENERAL

This work package contains the information necessary for field maintenance personnel to ensure that the TWPS is ready for operation at the maintenance site. The procedures covered in this work package include:

- (Determine) Site Requirements
- Unpack
- Check Unpacked Equipment
- Installation Instructions
- (Perform) Preliminary Servicing and Adjustment of Equipment

SITE REQUIREMENTS

When not in use the TWPS does not require special siting or shelter. If shelter is available, storing the TWPS under cover will minimize routine maintenance. Refer to WP 0002, Equipment Description and Data under the heading **EQUIPMENT DATA** for general storage temperature limitations. Refer to Preparation for Storage (WP 0032 and WP 0033, TM 10-4610-309-10) for specific storage instructions.

For operation of the TWPS at a Field Maintenance site, the TWPS requires a natural water source such as lake, river, stream, or ocean. A more suitable option for TWPS operation at a typical maintenance site is to setup the TWPS with the TWPS recirculation tank kit (see WP 0041, for Additional Authorized Item). Procedures for setup and operation of the TWPS with the recirculation tank kit are in WP 0009, TM 10-4610-309-10.

UNPACK

1. Unload the TWPS. Refer to (WP 0006, Equipment Off-Loading – Army Unit and WP 0007 Equipment Off-Loading – Marine Corps Unit, TM 10-4610-309-10). It takes 2 to 4 hrs to unpack and setup a TWPS.

CHECK UNPACKED EQUIPMENT

1. Inspect the equipment for damage incurred during shipment. If the equipment has been damaged, report the damage on SF 361, Transportation Discrepancy Report.
2. Check the equipment against the packing slip to see if the shipment is complete. Report all discrepancies in accordance with applicable service instructions (e.g., for Army instructions, see DA PAM 750-8).
3. Conduct a complete inventory against the COEI and BII lists (TM 10-4610-309-10). Report all discrepancies in accordance with applicable service instructions (e.g., for Army instructions, see DA PAM 750-8).
4. Check to see whether the equipment has been modified.
5. Check the general condition of the TWPS skid and all COEI and BII. Report all discrepancies in accordance with applicable service instructions.
6. (A-TPWS only) Check to see that NBC filter media is packed inside the NBC filter tank. Check the shelf life data for the ion exchange resin. Replace if expired or near expiration.
7. The RO elements and the MF elements may be installed or may not. A tag attached to the handle of V-502 is supposed to provide notice whether the RO vessels are empty or if the RO simulators are installed. If unsure, it may be necessary to dissemble an RO vessel or MF module to determine whether the MF modules or RO elements are installed.

INSTALLATION INSTRUCTIONS

1. Check that microfilters are installed by removing a sub-module from the microfilter assembly (WP38, TM 10-4610-309-10).
2. Check that RO elements are installed (WP39, TM 10-4610-309-10).
3. If it will be necessary to operate the TWPS, setup the TWPS with the recirculation tank kit (WP 0009, TM 10-4610-309-10).
4. Follow additional setup instructions for TWPS in WP 0008, TM 10-4610-309-10.

PRELIMINARY SERVICING AND ADJUSTMENT OF EQUIPMENT

1. Check the warnings at the front of this manual and the operator's manual, TM 10-4610-309-10.
2. Lubricate the TWPS in accordance with the lubrication instructions in WP 0008.
3. Check oil level in air compressor.
4. Adjust air compressor belt tension. Check the motor mount base bolts for tightness.
5. Verify air filters are installed in AF-1 and AF-2. Refer to (WP 0040, TM 10-4610-309-10) Air System Operator Maintenance Procedures, under the heading **SERVICE.**
6. Remove the vapor capsules from the OCP, PDP and Instrument Panel. Install new vapor capsules (WP 0038, Table 1, item 54).
7. Apply anti-corrosion compound to all areas listed in PMCS (WP 0038, Table 1, item 22).
8. Check the charge on the fire extinguisher. Check the expiration date and replace if necessary.
9. Make sure that the eyewash station contains new un-opened bottles. Check the expiration date. Replace as necessary.
10. Check the shelf life on the WQAS-P and Marine Corps instruments chemicals. Replace as necessary.

11. Check the hydro-test date on the air receiver tank. The date (month and year) is stamped into the metal near the top of the tank along with other numbers. An example is shown below. Have the air receiver tank hydro-tested if the date is close to or greater than 5 years old.

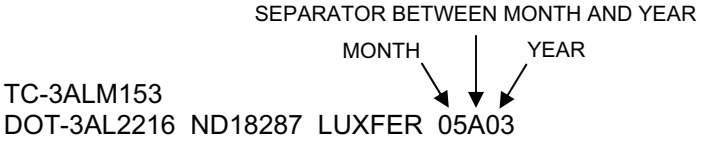

12. Service the TQG. Refer to TM 9-6115-672-14.
13. Complete all pre-operational PMCS.
14. Establish electrical power to the TWPS following procedures in WP 0010, TM 10-4610-309-10.
15. Perform pre-operational self test following procedures in WP 0011, TM 10-4610-309-10.
16. Perform startup and operation following procedures in WP 0012, TM 10-4610-309-10. If the system was delivered in a preserved status, the rinse water must be collected into the cleaning waste storage tank and disposed of in accordance with local regulations.
17. Perform normal operational checks following procedures in WP0014, TM 10-4610-309-10.
18. After all maintenance actions have been completed follow procedures in WP 0032 or WP 0033 (TM 10-4610-309-10) to prepare the TWPS for storage. This procedure involves cleaning and preservation of the microfilter and RO elements.
19. Pack (repack) out the TWPS. (Refer to WP 0029, Preparation for Movement – Army Unit and WP 0030, TM 10-4610-309-10 Preparation for Movement – Marine Corps Unit).

END OF WORK PACKAGE

TACTICAL WATER PURIFICATION SYSTEM (TWPS) FIELD MAINTENANCE PROCEDURES PREVENTIVE MAINTENANCE CHECKS AND SERVICES (PMCS) INTRODUCTION

INTRODUCTION

Preventive Maintenance Checks and Services (PMCS) provide scheduled procedures to maintain the TWPS at a specified level of performance by providing systematic inspection, detection, servicing, condition monitoring, and/or replacement to prevent impending failures. A Field level PMCS schedule is established for maintenance to perform PMCS at the periodic intervals of operation called out in Table 1.

PMCS TABLE FORMAT

Preventive Maintenance Checks and Services (PMCS) tables list inspection and care requirements to keep the TWPS in good operating condition. The following describes the purpose of each column in the PMCS Table.

1. ITEM NO: Each maintenance check is identified by a separate item number. The item column will be used as a source of item numbers for the “TM Number” on DA Form 2404, Equipment Inspection and Maintenance Worksheet, in recording results of PMCS.
2. INTERVAL: This column indicates when to perform the service check or maintenance.

   Periodic (see procedure for prescribed hourly intervals, quarterly, semi-annually)

3. ITEM TO BE CHECKED OR SERVICED: this column identifies the component, assembly, or system to be checked or serviced.
4. PROCEDURE: This column identifies what check or inspection task to perform and what action to take if corrections need to be made. Appropriate work packages are also referenced here.
5. EQUIPMENT NOT READY IF: This column indicates equipment conditions that make the equipment not capable of performing its assigned mission.

GENERAL INSPECTION AND MAINTENANCE

The following general inspection and maintenance procedures can be performed at any time. It is a good practice to perform these general procedures regularly to ensure that the TWPS remains in good operating condition.

1. Keep the TWPS clean. Dirt, grease, oil, and debris get in the way and may cover up serious problems.
2. Rust and Corrosion. Check the TWPS body and frame for rust and corrosion. If any bare metal or corrosion exists, clean and apply a thin coat of oil, report to supervisor, or prepare an SF 368, Products Quality Deficiency Report. Using key words such as “corrosion”, “rust”, “deterioration”, or “cracking” will ensure that the information is identified as a Corrosion Prevention and Control (CPC) problem.
3. Bolts, Nuts, Screws. Check for obvious looseness, missing, bent or broken condition. Correct or report to supervisor.
4. Welds. Look for loose or chipped paint, rust, or gaps where parts are welded together. If a bad weld is located, report it to the supervisor.
5. Electrical Wires and Connections. Look for cracked, frayed, or broken insulation, bare wires and loose or broken connections. Correct or report to supervisor.

6. Hoses and Fluid Lines. Look for wear, damage, and leaks. Make sure clamps and fittings are tight. Wet spots or stains around fittings and connectors indicate leaks. Correct or report to supervisor.
7. Leakage definitions are as follows:
    a. **Class I:** For oil and fuel: Seepage of fluid (as indicated by wetness) but not enough to form drops. For water: Seepage of fluid (as indicated by wetness) or leakage great enough to form drops, but not enough to cause drops to fall.
    b. **Class II:** For oil and fuel: Leakage of fluid great enough to form drops, but not enough to cause drops to fall. For water: Leakage great enough to result in more than a slow dripping from the leaking item.
    c. **Class III:** For oil and fuel: Leakage great enough to cause drops to fall from leaking item. For water: Rapid dripping or spray deemed to be a safety hazard or has the potential to damage other equipment.

CAUTION

Operation is allowable with Class I and II leakage. Class II leaks should be corrected when operational demands allow. Check regularly for any increase in leakage.

Do not continue operation with Class III leakage.

END OF WORK PACKAGE

TACTICAL WATER PURIFICATION SYSTEM (TWPS) FIELD MAINTENANCE PROCEDURES PREVENTIVE MAINTENANCE CHECKS AND SERVICES (PMCS)

0008 00

THIS SECTION COVERS:
Periodic Preventive Maintenance Checks and Services (PMCS)

INITIAL SETUP:
TWPS Shut Down and Cooled Off
Maintenance Level
Field

Table 1. Periodic PMCS for TWPS.

ITEM NO.	INTERVAL	ITEM TO BE CHECKED OR SERVICED	PROCEDURE	EQUIPMENT NOT READY IF:
1	First 50 hours of operation	Diesel engine	Change the lube oil and clean the filter for a new engine after the first 50 hours of operation (refer to WP 0011).	Maintenance log does not contain entries for these procedures after the first 50 hours of a new engine operation.
2	100 hours of operation	Diesel engine	Change the diesel engine oil (refer to WP 0011).	Maintenance log does not contain an entry for this procedure after each 100 hours of engine operation.
3	200 hours of operation	Diesel engine	Clean the fuel filter (refer to WP 0011.)	
4	400 hours of operation	Diesel engine	Replace the lube oil filter (refer to WP 0011).	
5	400 hours of operation	Diesel engine	Replace the fuel filter (refer to WP 0011).	
6	500 hours of operation of the diesel engine	Diesel engine	Clean the fuel injection valve nozzle. Adjust the intake and exhaust valve clearance. (Refer to WP 0011.)	
7	1000 hours	Air compressor	Replace the compressor oil (refer to WP 0017).	
8	1000 hours	HP Pumps (segmented, composite-body pumps)	Replace the inlet and outlet valve cartridges and pistons (refer to WP 0014).	
9	1000 hours	Diesel engines	Notify Field to service cylinder head (WP 0029) Notify Field to replace piston rings (WP 0029)	
10	1500 hours	Air System	Inspect and clean the air compressor intermediate filter and the CO-1 coalescer filter elements (refer to WP 0015).	

Table 1. Periodic PMCS for TWPS - Continued.

ITEM NO.	INTERVAL	ITEM TO BE CHECKED OR SERVICED	PROCEDURE	EQUIPMENT NOT READY IF:
11	2000 hours	HP Pumps (segmented, composite-body pumps)	Replace the cluster plate and shaft seal. This will coincide with replacement of the pistons and the valves (refer to WP 0014).	
12	3000 hours	Air compressor	Replace valve head assemblies (refer to WP 0017).	
13	6000 hours	HP Pumps (solid, metal-body pumps)	Disassemble pump and replace flexible coupling insert, all O-rings, shaft seal, and other internal components (WP 0014 00).	
14	Quarterly when in use.	Diesel heater fuel filter	Clean. Replace if blocked (refer to WP 0025).	
15	Semi-annual	Diesel heater output air filter	Replace (refer to WP 0025).	
16	Annually	High pressure pump motors, MF pump motor, RO pump motor, and air compressor motor	Apply GAA grease (WP 0038, Table 1, item 25) through the zirk grease fittings. The zirk for the MF and RO pump motors is located at the top of the motor at the end closest to the motor/pump adapter and has a plastic cap over it. Remove a plastic grease (drain) plug on the same end of the motor near the 7 o'clock position. Apply grease to the zirk until clean grease exits the opening where the grease plug was removed. Then reinstall the grease plug. The zirk for high pressure pump motor and the compressor motor is located at the top of the motor at the end closest to the motor shaft and has a plastic cap over it. Remove a grease plug near the bottom of the motor opposite the zirk. Apply grease to the zirk until clean grease exits the opening where the grease plug was removed. Then reinstall the grease plug.	
17	Annually	Electrical System Terminals	Check and tighten all electrical terminals in the TWPS electrical systems.	
18	Annually	Bail Bars	Replace all bail bar fasteners	

END OF WORK PACKAGE

TACTICAL WATER PURIFICATION SYSTEM (TWPS) FIELD MAINTENANCE PROCEDURES RAW WATER SYSTEM

0009 00

THIS SECTION COVERS:
Inspect, Repair, Replace

INITIAL SETUP:

Maintenance Level
Field
Tools
Army: General Mechanic's Tool Kit (WP 0037)
Marine Corps: Common No. 1 Tool Set (WP 0037)
Reference:
Refer to TM 10-4610-309-23P for repair parts information
Personnel Required
Two
Equipment Condition
TWPS removed from service or during operation as required

GENERAL:

This work package contains information and instructions for repairing and replacing components in the Raw Water System. These include:

- Floating Inlet Strainer, Anchor, Pulley and Rope System Replacement
- Suction and Discharge Hose Replacement
- P-1 Skid Frame Replacement
- P-1 Skid Junction Box Replacement
- P-1 Diesel Engine-Driven Pump Replacement
- P-2 Skid Frame Replacement
- P-2 Skid Junction Box Replacement
- P-2 Skid Power Cable Replacement
- P-2 Pump Motor Cable Replacement
- P-2 Electric Motor-Driven Pump Replacement
- P-2 Pump Motor Replacement
- Adaptor Assembly A-01 Repair/Replacement
- Adaptor Assembly A-02 Repair/Replacement
- Adaptor Assembly A-03 Repair/Replacement
- Adaptor Assembly A-04 Repair/Replacement
- Adaptor Assembly A-05 Repair/Replacement
- Cyclone Separator Repair/Replacement
- P-1 and P-2 Pump Overhaul

For maintenance and replacement procedures for the P-1 Pump diesel engine, refer to WP 0011.

REPLACE

Floating Inlet Strainer, Anchor, Pulley and Rope System Replacement:

Parts (TM 10-4610-309-23P):
Floating inlet strainer
Anchor
Pulley
Rope
Equipment Condition:
TWPS removed from service

Inspect each of the following components for damage that can prevent it from functioning properly and replace if necessary:

- floating inlet strainer
- anchor
- connection to the anchor
- rope
- pulley

Suction and Discharge Hose Replacement:

Parts (TM 10-4610-309-23P):
Suction hoses
Discharge hoses
Gaskets
Equipment Condition:
TWPS removed from service

Inspect the raw water system hoses and hose connectors for leaks, cracks or other damage. Replace the entire hose assembly if damage is found. Check the female connectors of all hose assemblies for missing or damaged gaskets and replace as necessary.

P-1 Skid Frame Replacement:

Parts (TM 10-4610-309-23P):
P-1 pump skid frame
Equipment Condition:
P-1 pump assembly removed from service and drained

Inspect the P-1 pump skid frame for damage. If frame damage is repairable by welding, contact Direct Support Maintenance. Replace the frame if it is beyond repair as follows:

1. Remove the fuel tank assembly from the skid as follows (see Figure 1):
    a. Close the fuel tank fuel cock.
    b. Uncouple the fuel supply and return line quick disconnect couplings.

CAUTION

Potential cause of fuel pump and injection valve failure. Do not leave the fuel lines for the diesel engine and fuel tank disconnected. Failure to observe this caution may allow sand and dirt to enter the fuel system and result in fuel pump and injection valve failure.

c. Couple the two tank fuel lines together and the two diesel engine fuel lines together.
d. Lift the fuel tank assembly off the skid.

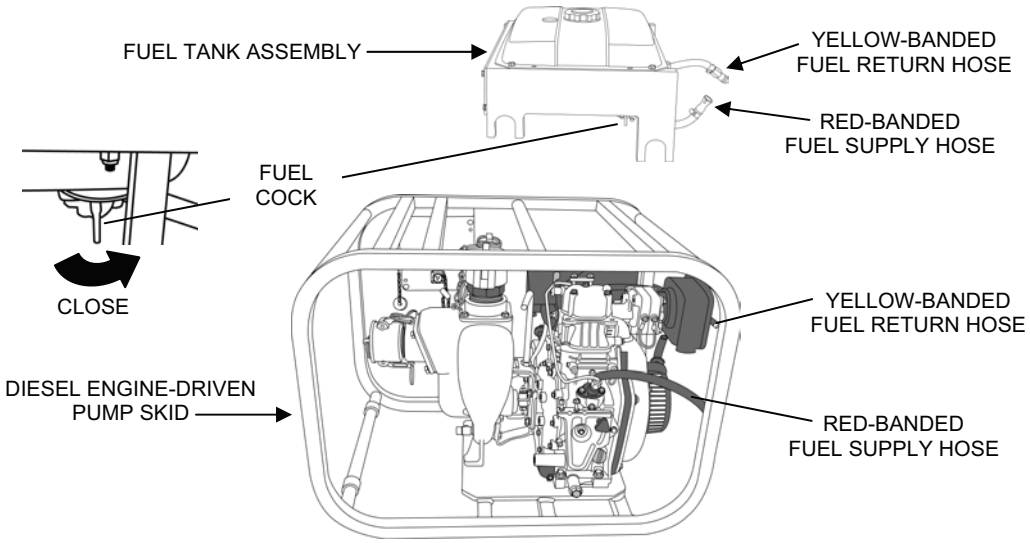

Figure 1. Raw Water Pump P-1 Skid Fuel Tank Assembly Removal.

2. Remove the junction box. Refer to **REPLACE** and **P-1 Skid Junction Box**.
3. Pull the recoil starter rope out a little, secure the rope, slip the handle down the rope and untie or cut off the knot at the end of the rope (see Figure 2).
4. Remove the handle from the rope and pull the rope end out of the eye bolt.
5. Slide the handle back onto the rope end and knot the end of the rope. Let the rope and handle retract to the recoil starter.

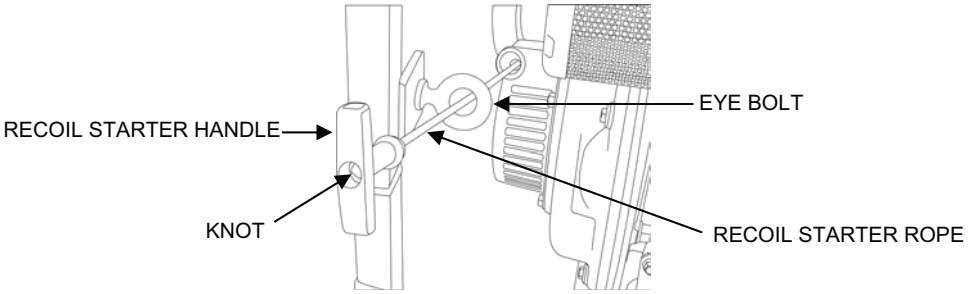

Figure 2. Recoil Starter Rope Removal / Installation from / into Rope Guide.

6. Remove the four bolts, flat washers, and lock washers that secure the engine/pump assembly to the skid (see Figure 3).

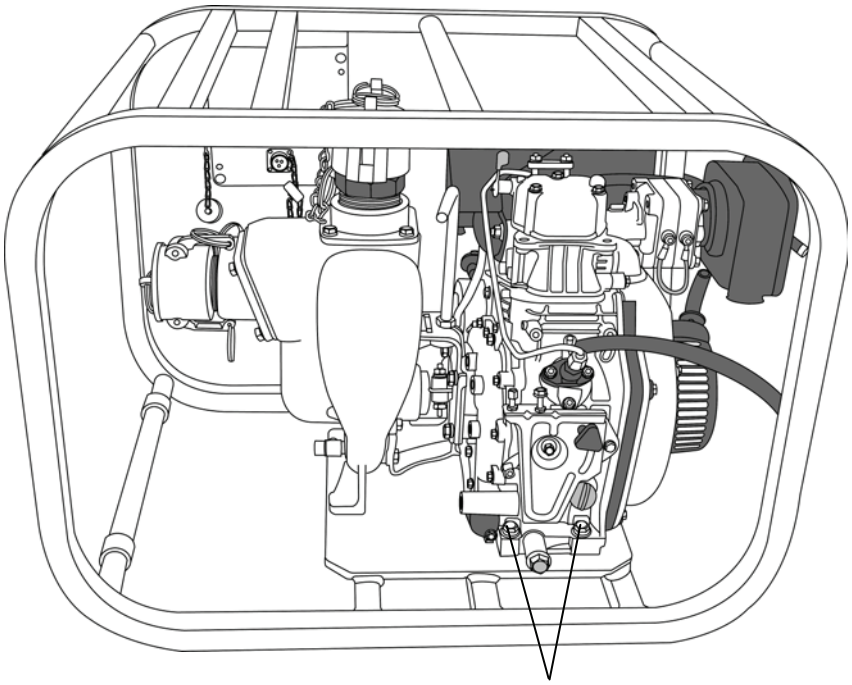

Figure 3. Raw Water Pump P-1 Engine Mounting Hardware Removal.

WARNING

Two person lift. Two people are required to safely move the engine/pump unit. Lift with your legs, not your back. Failure to observe this warning may result in back injury.

7. Slide the engine/pump unit out the side of the skid.
8. Position the engine/pump assembly onto the new skid.
9. Pull the recoil starter rope out past the skid frame, secure the rope, slip the handle down the rope and untie or cut off the knot at the end of the rope (see Figure 2).
10. Remove the handle from the rope and thread the rope through the eye bolt.
11. Slide the handle back onto the rope end and knot the end of the rope. Let the rope and handle retract to the eye bolt.
12. Secure the assembly to the skid with four bolts, flat washers, and lock washers.
13. Install the junction box. Refer to **REPLACE** and **P-1 Skid Junction Box**.
14. Mount the fuel tank assembly on the skid frame and connect the fuel tank and diesel engine fuel supply and return lines.

P-1 Skid Junction Box Replacement:

Parts (TM 10-4610-309-23P):
P-1 pump skid junction box
Equipment Condition:
P-1 pump assembly removed from service

Inspect the junction box for damage or corroded connectors. Replace the box if damage or corrosion is severe enough to make it unsafe or non-functional as follows (see Figure 4):

1. Disconnect the yellow cable wire from the engine air heaters, and the blue and red wires from the terminals of the starter solenoid.
2. Remove the two clamps and screws that secure the cable to the skid frame.
3. Remove four screws and washers that attach the junction box to the skid frame. Remove the junction box and cable.

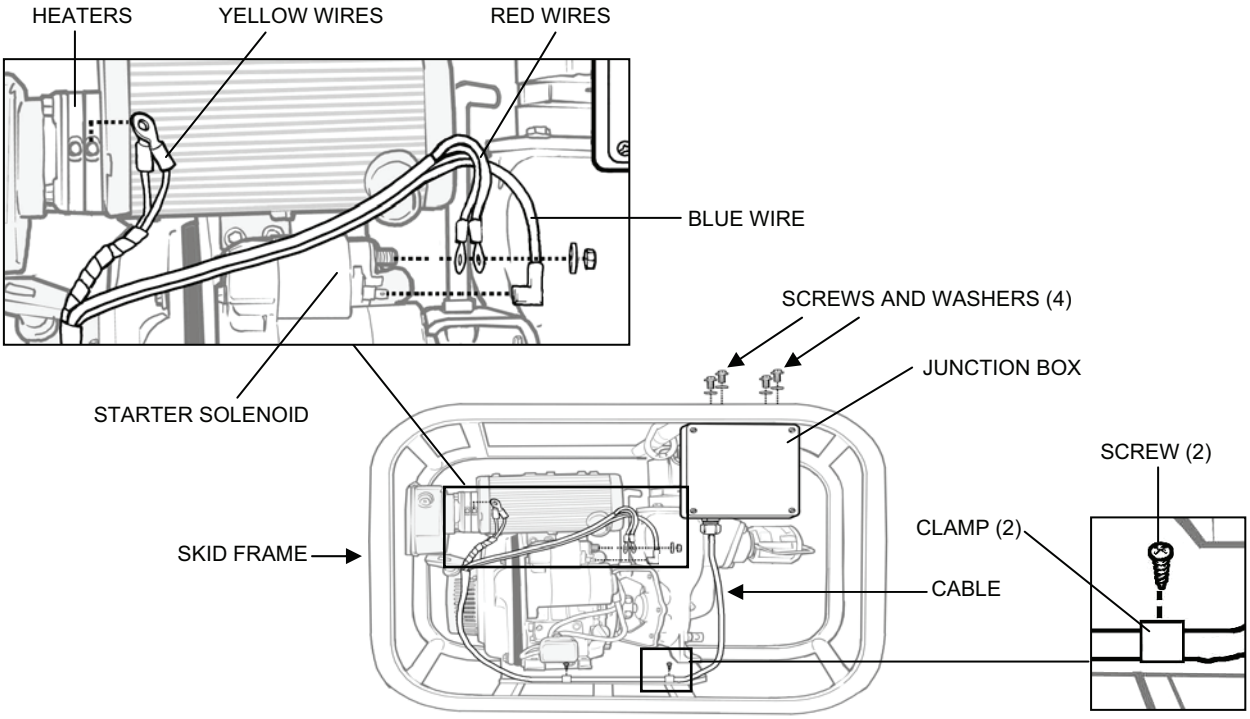

Figure 4. P-1 Skid Junction Box Replacement.

4. Attach the new junction box and cable to the frame using the four screws and washers. Be sure to orient the box so the toggle switch on the side faces toward the diesel engine.
5. Route the junction box cable along the skid frame and attach it to the frame using the two clamps and screws.
6. Attach the yellow cable wire to the engine air heater and the blue and red wires to the terminals on the starter solenoid.

P-1 Diesel Engine-Driven Pump Replacement:

Parts (TM 10-4610-309-23P):
P-1 Pump
Material:
Cloth, Abrasive (WP 0038, Table 1, item 14)
Corrosion Preventive Compound (WP 0038, Table 1, item 19)
Sealing Compound (WP 0038, Table 1, item 40)
Clean, dry rags (WP 0038, Table 1, item 39)
Equipment Condition:
P-1 Pump assembly removed from service and drained

Replace the P-1 pump as follows (see Figure 5):

WARNING

Burn hazard. Make sure the diesel engine and its parts are cool before performing maintenance on the pump. Failure to observe this warning may result in serious personal injury from touching hot surfaces.

1. Remove the fuel tank from the skid. Refer to **REPLACE** and **P-1 Skid Frame**.
2. Remove the pump and adapter from the diesel engine as follows:
   a. Remove the six nuts that attach the pump housing to the adapter, then loosen and remove the pump housing.
   b. Remove and discard the coupling clamp assembly.
   c. Carefully pry the impeller/drive sleeve assembly off the engine drive shaft and discard it.
   d. Remove the four bolts, four lock washers, and four flat washers that attach the adapter to the engine. Remove and discard the adapter.

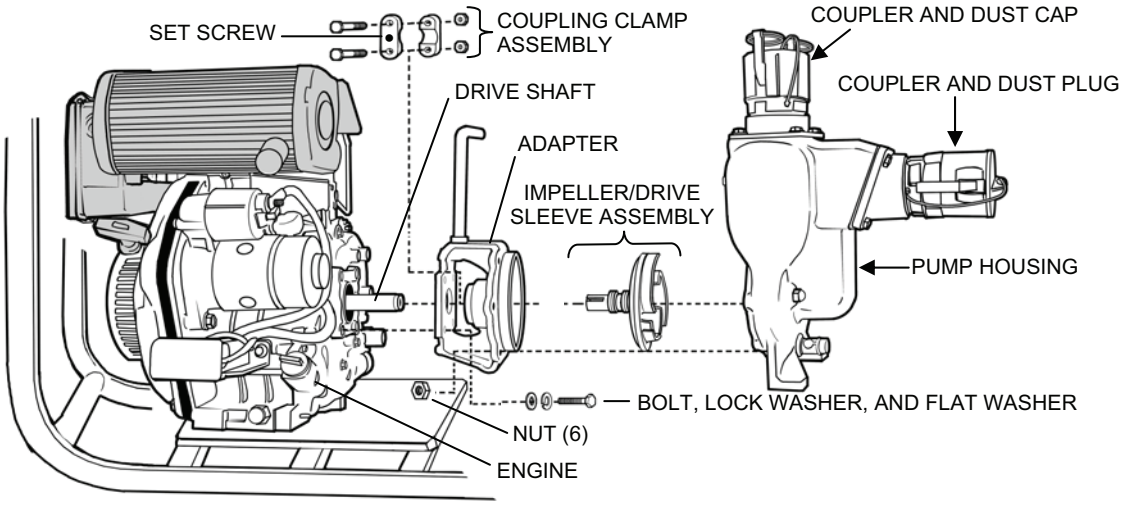

Figure 5. P1 Pump Replacement.

3. Install the new adapter and pump as follows:
   a. Polish the engine drive shaft with fine abrasive cloth to remove any rust or corrosion.
   b. Lubricate the drive shaft and the inside diameter of the drive sleeve on the new pump with corrosion preventive compound.

CAUTION

Improper assembly can result in damage to the drive sleeve and the engine drive shaft. Do NOT place a key between the drive shaft and the drive sleeve. Do NOT force the drive sleeve onto the shaft. Failure to observe this caution can make impeller clearance adjustments and future removal of the drive sleeve difficult, and may result in damage to the drive sleeve and/or the engine drive shaft.

Replacement pump assemblies come with a pump housing, impeller, drive sleeve assembly, coupling clamp assembly, and adapter already assembled together. A temporary impeller spacer is installed inside the pump between the impeller and wear plate. Do NOT rotate the pump before removing the spacer or equipment damage may result. Do NOT remove the spacer until the pump has been mounted to the engine and the coupling clamp assembly has been tightened.

   c. Loosen but do not remove the coupling clamp assembly on the new pump.
   d. Position the replacement pump, align the coupling clamp set screw, a drive sleeve slat, and the engine drive shaft keyway and slide the drive sleeve onto the drive shaft.

NOTE

If the sleeve does not easily slide onto the shaft, it may be necessary to remove burrs from the shaft.

   e. Attach the pump and adapter to the engine using four bolts, four lock washers, and four flat washers.
   f. Torque the coupling clamp assembly nuts to 216 in.-lbs.
   g. Tighten the coupling clamp set screw into the drive shaft keyway.
   h. Remove the plastic protective caps from the pump inlet and outlet openings.
   i. Remove the temporary impeller spacer by pulling it out through the pump outlet opening.
4. Remove the coupler and dust cap from the outlet connection of the old pump and install them on the new pump. Use sealing compound on the coupler threads (WP 0038, Table 1, item 40).
5. Remove the coupler and dust plug from the inlet connection of the old pump and install them on the new pump. Use sealing compound on the coupler threads (WP 0038, Table 1, item 40).
6. Remove the drain valve from the old pump. Remove the drain plug from the new pump and install the drain valve on the new pump. Use sealing compound on the valve threads (WP 0038, Table 1, item 40).
7. Place the pump back into service and inspect it for leaks and proper operation.

P-2 Skid Frame Replacement:

Parts (TM 10-4610-309-23P):
P-2 pump skid frame
Equipment Condition:
P-2 Pump assembly removed from service and drained

Inspect the P-2 pump skid frame for damage. If the frame damage is repairable by welding, contact Direct Support Maintenance. Replace the frame if it is beyond repair as follows (see Figure 6):

1. Disconnect the motor cable at the junction box.
2. Remove the four screws and washers that secure the junction box to the skid frame. Remove the junction box.
3. Remove the four bolts and washers that secure the pump/motor unit to the frame.

WARNING

Two person lift. Two people are required to safely move the pump/motor unit. Lift with your legs, not your back. Failure to observe this warning may result in back injury.

4. Slide the pump/motor unit out the side of the frame.
5. Position the pump/motor unit onto the new frame and secure it using the four bolts, flat washers, and lock washers.
6. Secure the junction box to the new frame using the four screws and washers. Be sure to orient the box so the side with two receptacles is facing inward.
7. Connect the motor cable to the proper receptacle on the junction box.

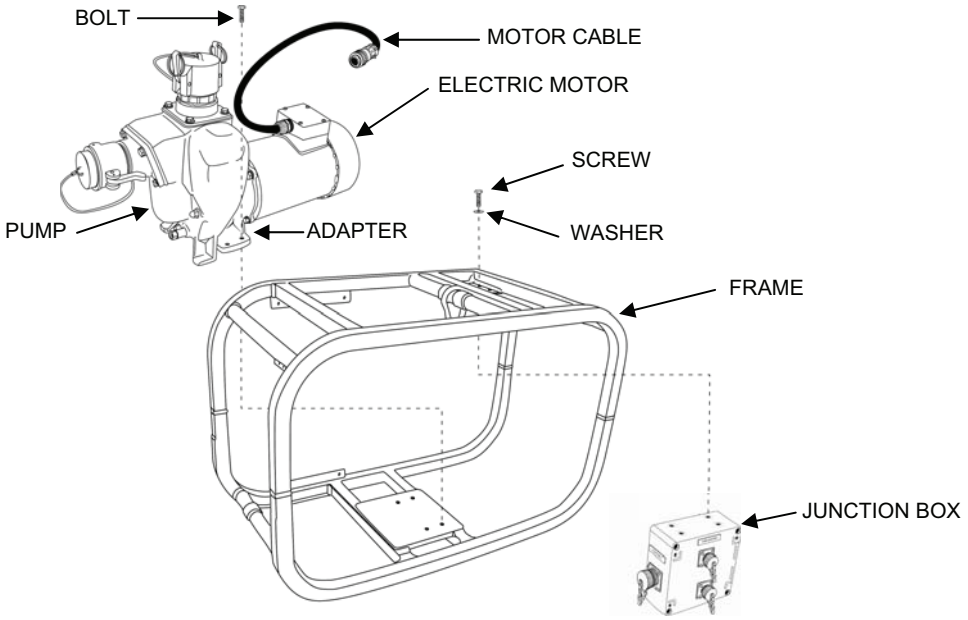

Figure 6. P-2 Pump Assembly Components.

P-2 Skid Junction Box Replacement:

Parts (TM 10-4610-309-23P):
P-2 pump skid junction box
Equipment Condition:
P-2 Pump assembly removed from service

Inspect the P-2 skid junction box for damage or corroded connectors. If damage or corrosion is severe enough to make it unsafe or non-functional, replace the box as follows (see Figure 6):

1. Disconnect the motor cable from the junction box.
2. Remove the screws and washers that secure the junction box to the skid frame. Remove the junction box.
3. Secure the new junction box to the frame using the retained hardware. Be sure to orient the box so the side with two receptacles is facing inward.
4. Connect the motor cable to the proper receptacle on the junction box.

P-2 Skid Power Cable Replacement:

Parts (TM 10-4610-309-23P):
P-2 skid power cable
Equipment Condition:
P-2 Pump assembly removed from service

Inspect the power cable that connects the P-2 pump junction box to the Power Distribution Panel for damage. If the cable or the cable connectors are damaged so that it is unsafe to use, replace the cable.

P-2 Pump Motor Cable Replacement:

Parts (TM 10-4610-309-23P):
P-2 Pump Motor Cable
Equipment Condition:
P-2 Pump assembly removed from service

Inspect the P-2 electric motor cable for damage. If the cable or connector is damaged so that it is unsafe to use, replace the cable as follows (see Figure 7):

1. Disconnect the motor cable at the junction box.
2. Remove the motor terminal box cover.
3. Inspect the terminal box gasket and replace if needed.
4. Tag and disconnect the motor terminal wires from the motor cable wires.
5. Unscrew the cable ring nut from the terminal box.
6. Pull the cable end out of the terminal box and discard the old motor cable.
7. Insert the wire end of the new cable into the terminal box and secure with the ring nut.
8. Connect the motor cable wires to the motor terminal wires in accordance with the tags.
9. Install the terminal box cover gasket and cover and secure with the two nuts.

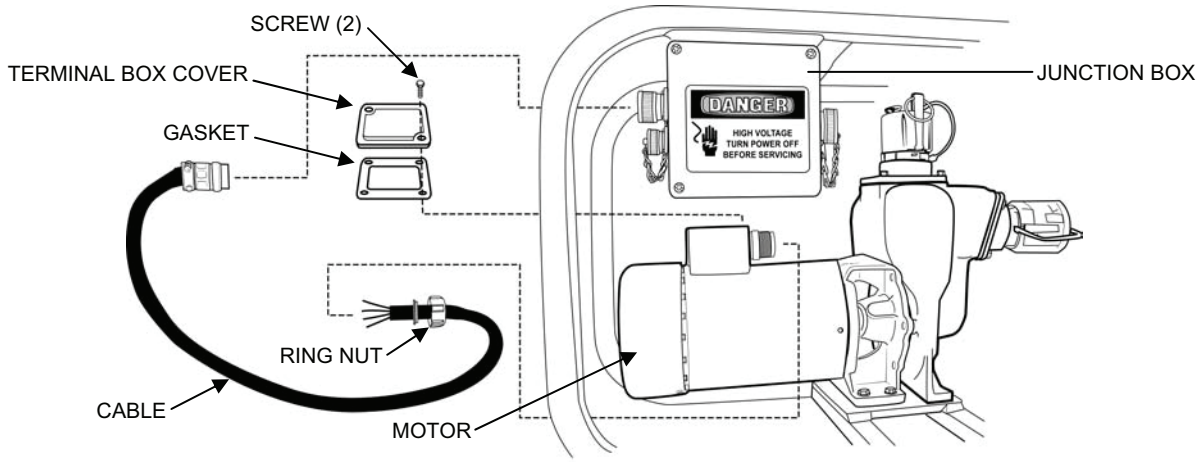

Figure 7. P-2 Pump Electric Motor Cable Replacement.

P-2 Electric Motor-Driven Pump Replacement:

Parts (TM 10-4610-309-23P):
P-2 Pump
Material:
Cloth, Abrasive (WP 0038, Table 1, item 14)
Corrosion Preventive Compound (WP 0038, Table 1, item 19)
Glycerin (WP 0038, Table 1, item 24)
Sealing Compound (WP 0038, Table 1, item 40)
Clean, dry rags (WP 0038, Table 1, item 39)
Equipment Condition:
P-2 Pump assembly removed from service and drained

Replace the P-2 pump as follows (see Figure 8):

1. Remove the pump as follows:
   a. Disconnect the pump motor cable from the junction box.
   b. Remove the four bolts and washers that attach the pump/motor unit to the skid.

WARNING

Two person lift. Two people are required to safely move the pump/motor unit. Lift with your legs, not your back. Failure to observe this warning may result in back injury.

   c. Slide the pump/motor unit out the side of the skid.
   d. Remove the six nuts that attach the pump housing to the adapter, then loosen and remove the pump housing.
   e. Remove and discard the coupling clamp assembly.
   f. Carefully pry the impeller/drive sleeve assembly off the motor drive shaft and discard it.

g. Remove the four cap screws and lock washers that attach the adapter to the motor.
h. Discard the adapter.

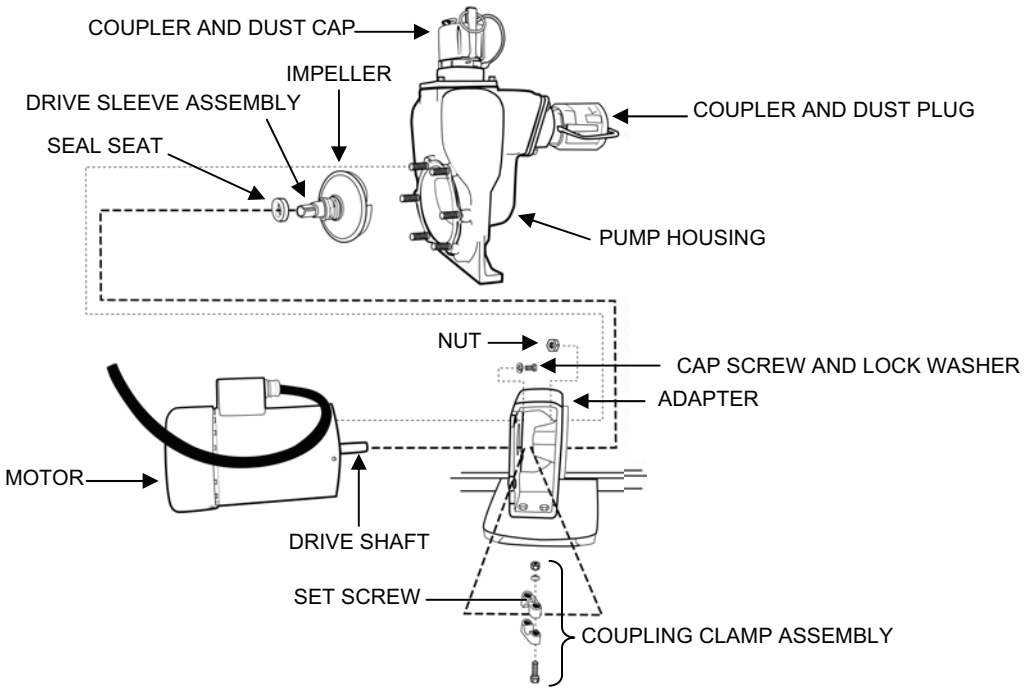

Figure 8. P-2 Pump and Motor Removal.

2. Install a new pump as follows:
   a. Polish the motor shaft with fine abrasive cloth to remove any rust or corrosion.
   b. Lubricate the shaft and the inside diameter of the drive sleeve on the new pump with corrosion preventive compound.

CAUTION

Improper assembly can result in damage to the drive sleeve and the motor drive shaft. Do NOT place a key between the drive shaft and the sleeve. Do NOT force the shaft into the sleeve. Failure to observe this caution can make impeller clearance adjustments and future removal of the drive sleeve difficult and may result in damage to the drive sleeve and/or the motor drive shaft.

Replacement pump assemblies come with a pump housing, impeller, drive sleeve assembly, coupling clamp assembly, and adapter already assembled together. A temporary impeller spacer is installed inside the pump between the impeller and wear plate. Do NOT rotate the pump until the spacer has been removed, or equipment damage may result. Do NOT remove the spacer until the motor has been mounted to the pump and the coupling clamp assembly has been tightened.

   c. Loosen but do not remove the coupling clamp assembly on the new pump.

d. Position the replacement pump, align the coupling clamp set screw, a drive sleeve slat, and the engine drive shaft keyway and slide the drive sleeve onto the drive shaft.

NOTE

If the shaft does not easily slide into the drive sleeve, it may be necessary to remove burrs from the shaft.

e. Attach the motor to the pump adapter using the four cap screws and four lock washers.
f. Torque the coupling clamp assembly nuts to 216 in.-lbs.
g. Tighten the coupling clamp set screw into the drive shaft keyway.

WARNING

Two person lift. Two people are required to safely move the pump/motor unit. Lift with your legs, not your back. Failure to observe this warning may result in back injury.

h. Position the pump/motor unit on the skid and bolt it in place using four bolts and washers.
i. Remove the plastic protective caps from the pump inlet and outlet openings.
j. Remove the temporary impeller spacer by pulling it out through the pump outlet opening.

3. Remove the coupler and dust cap from the outlet of the old pump and install them on the new pump. Use sealing compound on the coupler threads (WP 0038, Table 1, item 40).
4. Remove the coupler and dust plug from the inlet of the old pump and install them on the new pump. Use sealing compound on the coupler threads (WP 0038, Table 1, item 40).
5. Remove the drain valve from the old pump. Remove the drain plug from the new pump and install the drain valve on the new pump. Use sealing compound on the valve threads (WP 0038, Table 1, item 40).
6. Connect the motor cable to the proper receptacle on the junction box.
7. Place the pump back into service and inspect it for leaks.

P-2 Pump Motor Replacement:

Parts (TM 10-4610-309-23P):
P-2 Electric Motor
Kit, Seal Repair
Material:
Cloth, Abrasive (WP 0038, Table 1, item 14)
Corrosion Preventive Compound (WP 0038, Table 1, item 19)
Glycerin (WP 0038, Table 1, item 24)
Clean, dry rags (WP 0038, Table 1, item 39)
Sealing Compound (WP 0038, Table 1, item 40)
Equipment Condition:
P-2 Pump assembly removed from service and drained.

NOTE

The pump must be taken apart to separate it from the motor. This is because the impeller clearance must be set when the pump is installed on the new motor. The seal seat, seal assembly, housing gasket, and drive sleeve will also be replaced.

Replace the P-2 Pump electric motor as follows (see Figure 9 and Figure 10):

1. Remove the pump motor as follows:
   a. Disconnect the motor cable at the skid junction box.
   b. Remove the six nuts that attach the pump housing to the adapter.
   c. Loosen and remove the pump housing and gasket. Discard the gasket.
   d. Remove the coupling clamp assembly.

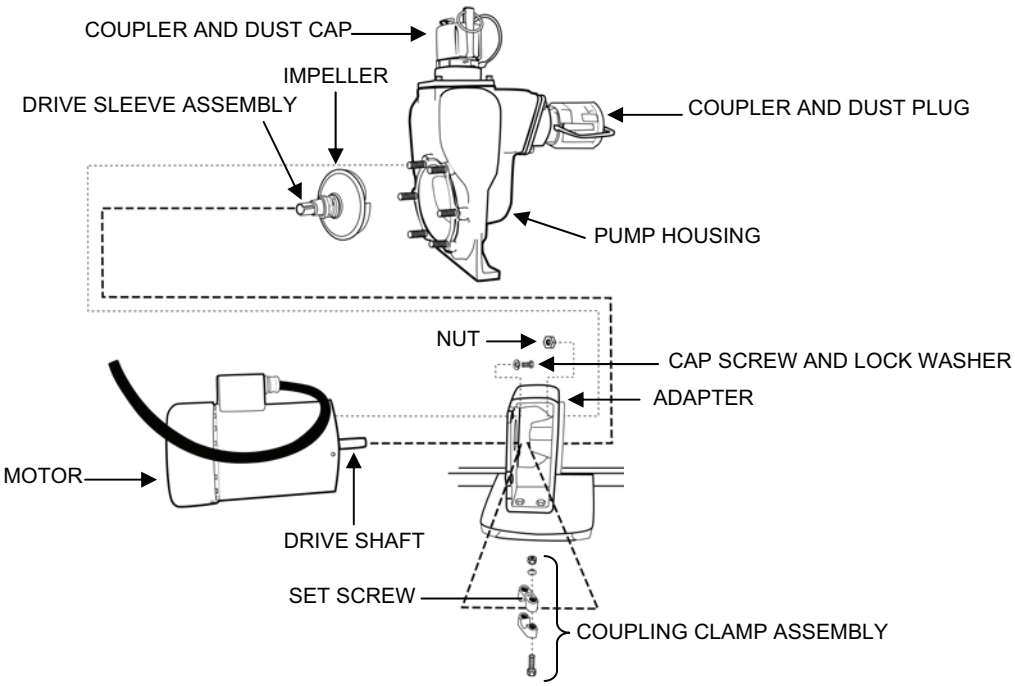

Figure 9. Pump P-2 Electric Motor Replacement.

   e. Carefully pry the drive sleeve off the motor drive shaft.
   f. Remove the lock nut and drive sleeve from the impeller (see Figure 10). Discard the sleeve and seal assembly. Attach the new sleeve to the impeller using the lock nut.
   g. Lubricate inner diameter of the new seal assembly with glycerin. With the rubber boot end toward the impeller, twist and slide the assembly onto the drive sleeve.
   h. Remove the four cap screws and four lock washers that attach the motor to the adapter and remove the motor.
   i. Push the seal seat out of the adapter and discard it.
   j. Clean the adapter bore and mounting faces.
   k. Clean the new seal seat and lubricate it with glycerin. Insert the beveled end of the seal seat into the adapter bore and press it into the adapter.

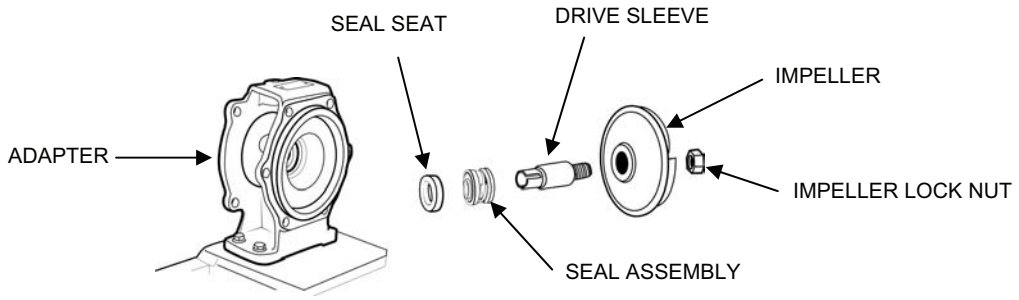

Figure 10. Drive Sleeve, Impeller, and Seal Assembly.

2. Install the new motor as follows:
   a. If necessary, polish the new motor's drive shaft with fine abrasive cloth to remove any rust or corrosion.
   b. Attach the new motor to the adapter using the four cap screws and four lock washers.
   c. Disconnect the motor cable from the old motor and attach it to the new motor. Refer to **REPLACE** and **P-2 Pump Motor Cable**.
   d. Lubricate the motor drive shaft and the inside diameter of the drive sleeve with corrosion preventive compound.

CAUTION

Improper assembly can result in damage to the drive sleeve and the motor drive shaft. Do NOT place a key between the drive shaft and the sleeve. Do NOT force the shaft into the sleeve. Failure to observe this caution can make impeller clearance adjustments and future removal of the drive sleeve difficult and may result in damage to the drive sleeve and/or the motor drive shaft.

NOTE

If the sleeve does not easily slide onto the shaft, it may be necessary to remove burrs from the shaft.

   e. Slide the drive sleeve/impeller assembly onto the drive shaft.
   f. Install the coupling clamp assembly but do not tighten it.
   g. Place a new housing gasket between the adapter and the pump housing.
   h. Fit the pump onto the adapter and thread a nut on two opposing threaded studs to secure the pump to the adapter. Tighten the two nuts.
3. Set the gap between the impeller and the pump wear plate as follows (see Figure 11):
   a. Remove the 4 cap screws and 4 lock washers that secure the outlet flange to the pump housing.
   b. Carefully remove the pump flange to avoid damaging the gasket between the flange and the pump housing.
   c. If the gasket is damaged, replace it.
   d. Look through the outlet into the pump. Turn the impeller drive sleeve and impeller by hand until you see the impeller near the wear plate.
   e. Insert a 0.015 – inch feeler gauge between the impeller and wear plate. Move the impeller forward or backward as needed to provide a gap of 0.015 to 0.017-inch.

f. Turn the impeller drive sleeve / impeller assembly by hand to make sure that there is a minimum gap of 00.015-inch through the entire rotation of the impeller.
g. Make sure the coupling clamp set screw, a drive sleeve slat, and the motor shaft keyway are aligned.
h. Tighten the coupling clamp assembly to secure the impeller drive sleeve to the motor drive shaft. Torque the nuts to 216 in.-lbs.
i. Tighten the coupling clamp set screw into the drive shaft keyway.

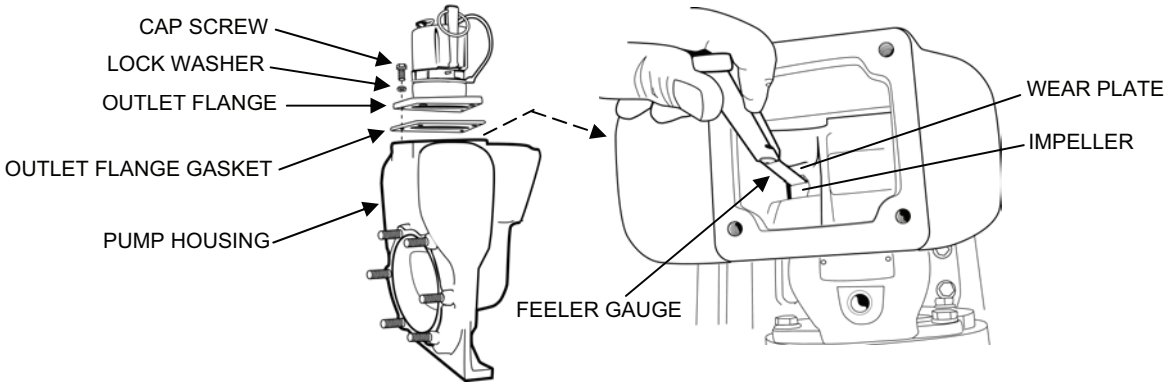

Figure 11. P2 Pump Impeller Clearance Adjustment.

4. Complete the installation as follows:
   a. Apply sealing compound to the threads of the remaining four threaded studs extending from the pump housing through the adapter (WP 0038, Table 1, item 40). Install the nuts onto the studs.
   b. Remove the two nuts initially installed onto opposing studs. Apply sealing compound to the stud threads and reinstall the nuts (WP 0038, Table 1, item 40).
   c. Reinstall the pump outlet flange and gasket.
5. Connect the motor cable to the proper receptacle on the junction box.
6. Place the pump back into service and inspect it for proper rotation and leaks.

Adaptor Assembly A-01 Repair / Replacement:

Parts (TM 10-4610-309-23P):
Adaptor assembly A-01
Equipment Condition:
TWPS removed from service

Inspect the adaptor assembly, including valve V-101, for leaks. If a leak is found at a coupler, replace damaged or missing gaskets as necessary. If a significant leak cannot be stopped by gasket replacement, or if the valve does not function properly, replace the entire assembly.

Adaptor Assembly A-02 Repair / Replacement:

Parts (TM 10-4610-309-23P):
Adaptor assembly A-02
Gaskets
Equipment Condition:
TWPS removed from service

Inspect the adaptor assembly, including valve V-102, for leaks. If a leak is found at a coupler, replace damaged or missing gaskets as necessary. If a significant leak cannot be stopped by gasket replacement, or if the valve does not function properly, replace the entire assembly.

Adaptor Assembly A-03 Repair / Replacement:

Parts (TM 10-4610-309-23P):
Adaptor assembly A-03
Gasket
Equipment Condition:
TWPS removed from service

Inspect the adaptor assembly, including valve V-104, for leaks. If a leak is found at a coupler, replace damaged or missing gaskets as necessary. If a significant leak cannot be stopped by gasket replacement, or if the valve does not function properly, replace the entire assembly.

Adaptor Assembly A-04 Repair / Replacement:

Parts (TM 10-4610-309-23P) :
Adaptor assembly A-04
Gasket
Equipment Condition:
TWPS removed from service

Inspect the adaptor assembly for leaks. If a leak is found at a coupler, replace damaged or missing gaskets as necessary. If a significant leak cannot be stopped by gasket replacement, replace the entire assembly.

Adaptor Assembly A-05 Repair / Replacement:

Parts (TM 10-4610-309-23P):
Adaptor assembly A-05
Gasket
Equipment Condition:
TWPS removed from service

Inspect the adaptor assembly, including valve V-107, for leaks. If a leak is found at a coupler, replace damaged or missing gaskets as necessary. If a significant leak cannot be stopped by gasket replacement, or if valve v-107 does not function properly, replace the entire assembly.

Cyclone Separator Repair / Replacement:

Parts (TM 10-4610-309-23P):
- Cyclone separator
- Couplers
- Gaskets

Material:
- Sealing compound (WP 0038, Table 1, item 40)

Equipment Condition:
- TWPS removed from service

Inspect the cyclone separator for leaks, cracks or other damage. Refer any metal repairs to Field maintenance. Inspect the couplings for damage and damaged or missing gaskets and replace as necessary, using sealing compound on the coupling threads. Replace the entire assembly if the separator has excessive leakage, if structural damage is significant enough that the assembly cannot be repaired, or if the separator is inoperable.

REPAIR

P-1 and P-2 Pump Overhaul:

Parts (TM 10-4610-309-23P):
- Kit, Pump Overhaul
- Flapper Assembly
- Outlet Flange Gasket

Material:
- Cloth, Abrasive (WP 0038, Table 1, item 14)
- Corrosion Preventive Compound (WP 0038, Table 1, item 19)
- Glycerin (WP 0038, Table 1, item 24)
- Clean, dry rags (WP 0038, Table 1, item 39)
- Sealing Compound (WP 0038, Table 1, item 40)

Equipment Condition:
- Pump assembly removed from service

Pump Overhaul

This section provides instructions for overhauling the P-1 or P-2 pump by replacing the internal components. A pump should be overhauled if its flow rate has noticeably decreased, or if inspection of the pump during disassembly for some other maintenance task (such as engine/motor replacement) shows that the impeller or wear plate is damaged or badly corroded. Additional instructions in this section describe how to replace the pump inlet flapper assembly and the outlet flange gasket.

NOTE

Whenever the P-1 or P-2 pump is disassembled for any of the maintenance tasks in this work package, replace the drive sleeve, seal seat, seal assembly, and housing gasket regardless of their condition. These components are included in the seal repair kit. The overhaul kit includes these components plus the impeller, wear plate, and wear plate mounting screws and gaskets.

1. (P-1 Pump Skid only) Remove the fuel tank assembly from the skid as follows (see Figure 12):
   a. Close the fuel tank fuel cock.
   b. Uncouple the fuel supply and return line quick disconnect couplings.

CAUTION

Potential cause of fuel pump and injection valve failure. Do not leave the fuel lines for the diesel engine and fuel tank disconnected. Failure to observe this caution may allow sand and dirt to enter the fuel system and result in fuel pump and injection valve failure.

   c. Couple the two tank fuel lines together and the two diesel engine fuel lines together.
   d. Lift the fuel tank assembly off the skid.

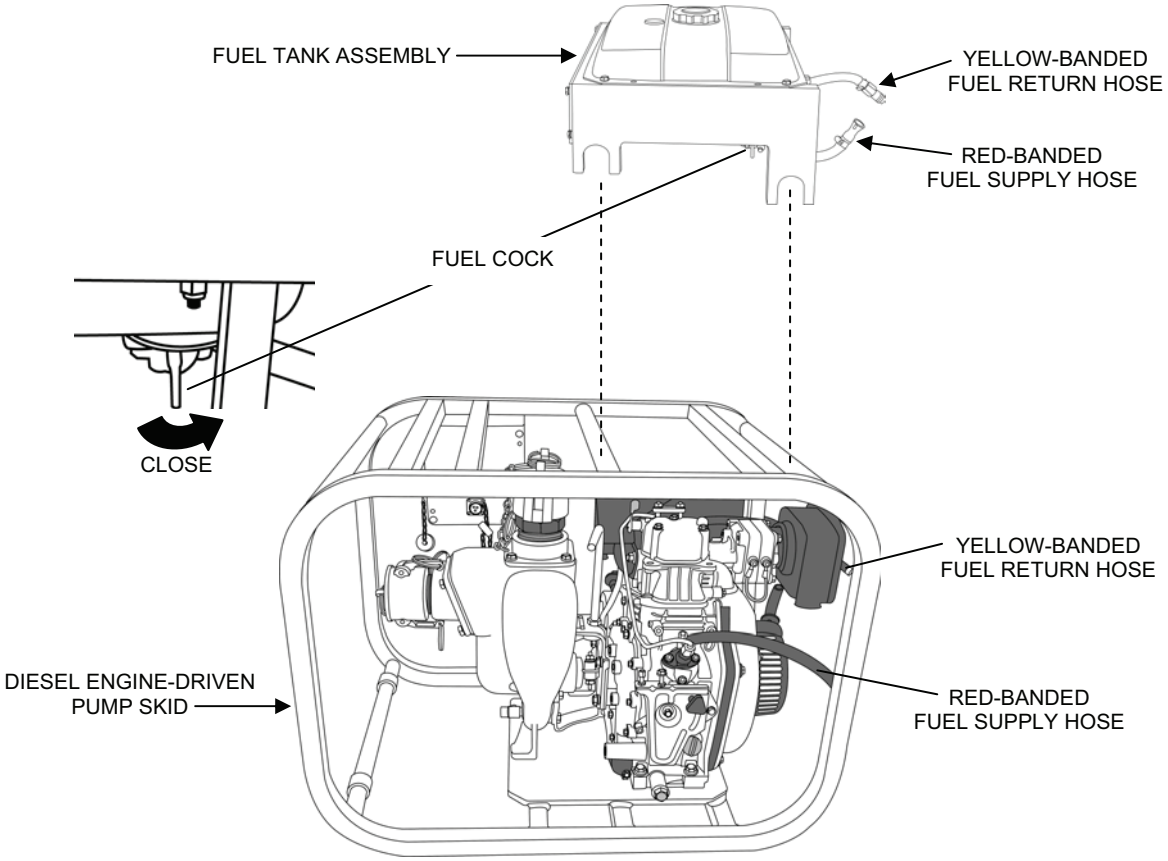

Figure 12. Raw Water Pump P-1 Skid Fuel Tank Assembly Removal.

2. Remove the pump from the diesel engine (P-1 Pump skid) or remove the pump from the motor (P-2 Pump skid) as follows (see Figure 13):
    a. Open the pump drain valve and drain any remaining water from the pump.
    b. Remove the six nuts that attach the pump housing to the adapter.
    c. Loosen and remove the pump housing and gasket. Discard the gasket.
    d. Remove and retain the coupling clamp assembly.
    e. Carefully pry the drive sleeve/impeller assembly off of the diesel engine (P-1) or electric motor (P-2) drive shaft. Discard the drive sleeve/impeller assembly.
    f. Remove the four cap screws, four lock washers, and four flat washers that attach the adapter to the diesel engine (P-1), or the four cap screws and four lock washers that attach the adapter to the electric motor (P-2) and remove the adapter.
    g. Push the seal seat out of the adapter and discard the seal seat.
    h. Remove and discard the two acorn nuts and two gaskets from the back of the pump housing.
    i. Remove and discard the two flat head screws and the wear plate.

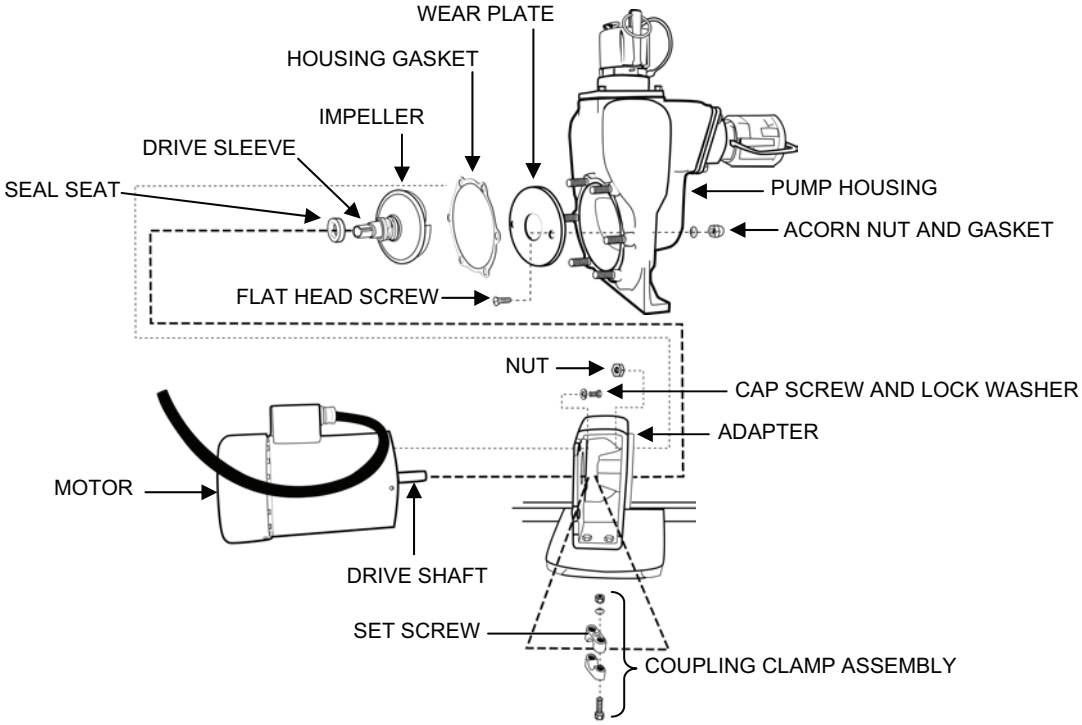

Figure 13. P-1 and P-2 Pump, Adapter, and Wear Plate Removal.

3. Assemble the pump with replacement parts as follows (see Figure 14):
    a. Insert the new wear plate into the pump housing and secure it to the housing with the new flat head screws and gaskets and the acorn nuts.
    b. Insert the new drive sleeve into the new impeller and secure it to the impeller using the impeller lock nut.
    c. Lubricate the inner diameter of the new seal assembly with glycerin or a comparable lubricant.
    d. With the rubber boot end of the seal assembly toward the impeller, twist and slide the seal assembly onto the drive sleeve.
    e. Clean the adapter bore and mounting faces.
    f. Clean the new seal seat and lubricate it with glycerin or a comparable lubricant.
    g. Insert the beveled end of the seal seat into the bore of the adapter and press it in until it is seated.

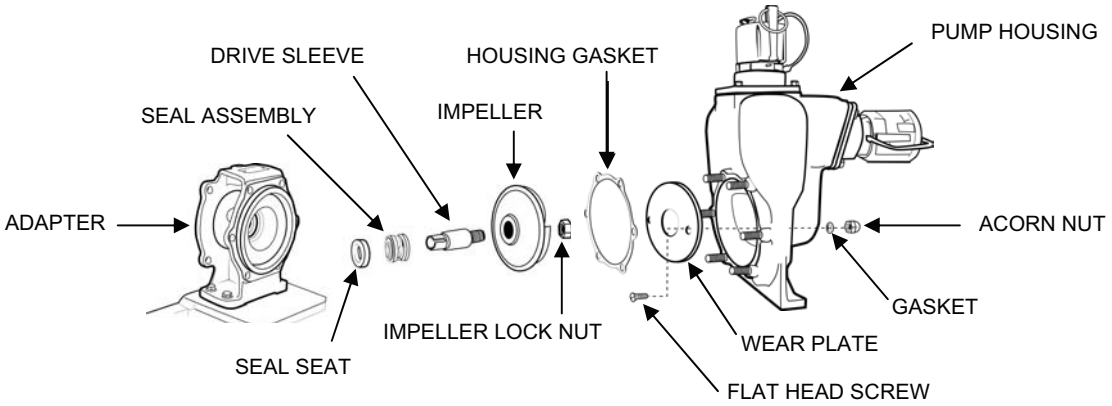

Figure 14. P1/P2 Pump Assembly.

4. Install the adapter and pump onto the diesel engine (P-1) or the electric motor (P-2) as follows (see Figure 15):
    a. Polish the engine/motor drive shaft with a fine abrasive cloth to remove any rust or corrosion.
    b. Attach the adapter to the engine (P-1) to the adapter using the four cap screws, four lock washers, and four flat washers or attach the adapter to the motor (P-2) using the four cap screws and four lock washers.
    c. Lubricate the engine/motor drive shaft and the inside diameter of the new drive sleeve with corrosion preventive compound.
    d. Slide the impeller and drive sleeve assembly onto the drive shaft.
    e. Install the coupling clamp assembly but do not tighten it.
    f. Place a new housing gasket between the adapter and the pump housing.
    g. Fit the pump onto the adapter and thread a nut on two opposing threaded studs to secure the pump to the adapter. Tighten the two nuts.

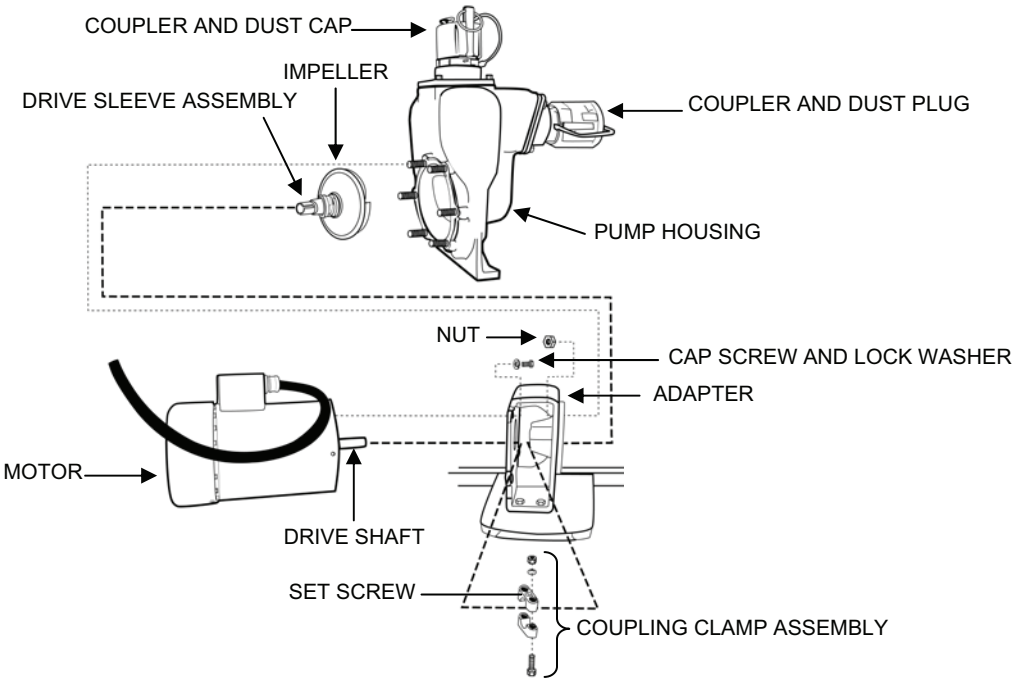

Figure 15. Pump P-2 Adapter and Pump Installation.

5. Set the gap between the impeller and the pump wear plate as follows (see Figure 16):
    a. Remove the four cap screws and four lock washers that secure the outlet flange to the pump housing.
    b. Carefully remove the pump flange to avoid damaging the gasket between the flange and the pump housing.
    c. If the gasket is damaged, replace it.
    d. Look through the outlet into the pump. Turn the impeller drive sleeve and impeller by hand until you see the impeller near the wear plate.
    e. Insert a 0.015 – inch feeler gauge between the impeller and wear plate. Move the impeller forward or backward as needed to provide a gap of 0.015 to 0.017-inch.
    f. Make sure the coupling clamp set screw, a drive sleeve slat, and the motor shaft keyway are aligned.
    g. Tighten the coupling clamp assembly to secure the impeller drive sleeve to the engine/motor drive shaft.
    h. Turn the drive shaft slowly to rotate the impeller and make sure that there is a minimum gap of 00.015-inch through the entire rotation of the impeller as follows:
        1) Turn the diesel engine (P-1) drive shaft by slowly pulling on the hand starter.
        2) Turn the electric motor (P-2) drive shaft by hand.
    i. Torque the coupling clamp nuts to 216 in.-lbs.
    j. Tighten the coupling clamp set screw into the drive shaft keyway.

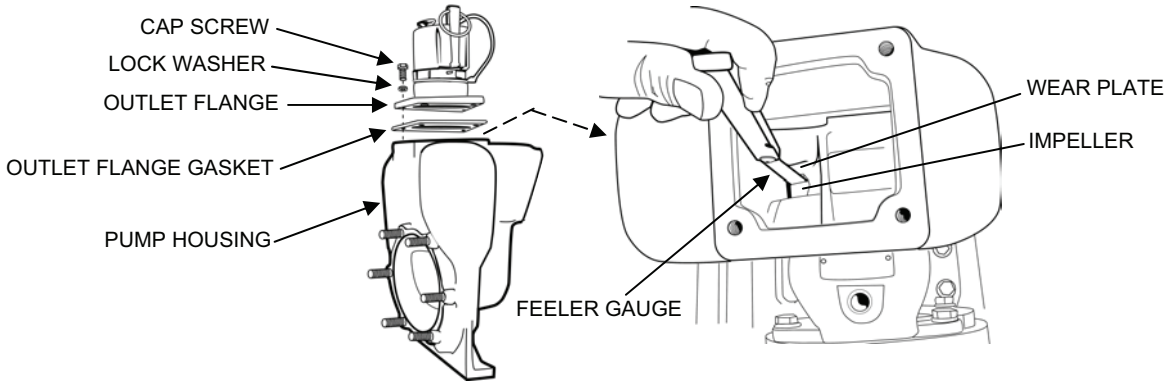

Figure 16. Pump Impeller Clearance Adjustment.

6. Complete the installation as follows:
    a. Apply sealing compound to the threads of the remaining four threaded studs extending from the pump housing through the adapter (WP 0038, Table 1, item 40). Install the nuts onto the studs.
    b. Remove the two nuts initially installed onto opposing studs. Apply sealing compound to the stud threads and reinstall the nuts (WP 0038, Table 1, item 40).
    c. Reinstall the pump outlet flange and gasket.
7. Connect the motor cable to the proper receptacle on the junction box.
8. Mount the fuel tank assembly on the skid frame and connect the fuel tank and diesel engine fuel supply and return lines.
9. Place the pump back into service and check it for leaks and proper operation.

Inlet Flapper or Outlet Flange Gasket Replacement

Replace the inlet flapper assembly on the P1 or P2 pump as follows (see Figure 17):

1. Remove the four cap screws and four lock washers that attach the inlet flange to the pump housing.
2. Remove the inlet flange and the flapper assembly.
3. Clean the flange and pump housing surfaces that come in contact with the flapper assembly.
4. Install a new flapper assembly, making sure the flapper opens into the pump housing.
5. Reattach the inlet flange using the four cap screws and four lock washers.

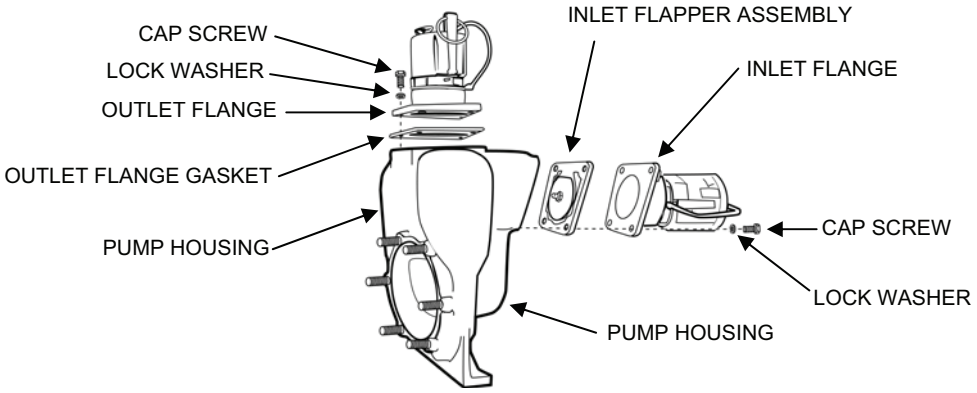

Figure 17. P1/P2 Pump Inlet Flapper Assembly and Outlet Flange Gasket Replacement.

Replace the outlet flange gasket on the P1 or P2 pump as follows (see Figure 17):

1. Remove the four cap screws and four lock washers that hold the outlet flange to the pump housing.
2. Remove the outlet flange and gasket.
3. Clean the flange and pump housing surfaces that come in contact with the gasket.
4. Install a new outlet flange gasket.
5. Reattach the outlet flange using the four cap screws and four lock washers.
6. Place the pump back into service and inspect it for leaks.

END OF WORK PACKAGE

TACTICAL WATER PURIFICATION SYSTEM (TWPS) FIELD MAINTENANCE PROCEDURES OCEAN INTAKE STRUCTURE SYSTEM (OISS)

0010 00

THIS SECTION COVERS:
Replace

INITIAL SETUP:

Maintenance Level
Field
Tools
Army: General Mechanic's Tool Kit (WP 0037)
Marine Corps: Common No. 1 Tool Set (WP 0037)
Parts (TM 10-4610-309-23P):
Backwash valve assembly
Wellpoint pipe (TM 10-4610-309-23P)
1.5 x .45 x 60 stainless steel pipe
1.5 x .45 x 24 stainless steel pipe
1.5 NPT stainless steel coupling
2.0 90-degree stainless steel elbow pipe assembly
OISS suction hose assembly
2.0 stainless steel threaded straight tee pipe assembly
3.0 stainless steel tee pipe assembly
Material:
Antiseizing tape (WP 0038, Table 1, item 49)
Personnel Required
One
Equipment Condition
OISS removed from service

GENERAL:
This procedure contains information and instructions for replacing components in the Ocean Intake Structure System (OISS) of the TWPS.

REPLACE

Inspect each of the components of the Ocean Intake Structure System for damage that can prevent it from functioning properly and replace if necessary (see Figure 1).

Replace damaged threaded OISS components as follows:
1. Unthread the damaged threaded component from the undamaged component.
2. Discard the damaged component.
3. Clean the threads of the undamaged component using a wire brush.
4. Install pipe tape on the male threads of the components to be connected as described in General Operator Maintenance Procedures WP 0043 00, TM 10-4610-309-10.
5. Thread the female and taped male pipe sections together.

Replace a damaged suction hose assembly by unclamping it from its fittings. Discard and replace the damaged hose.

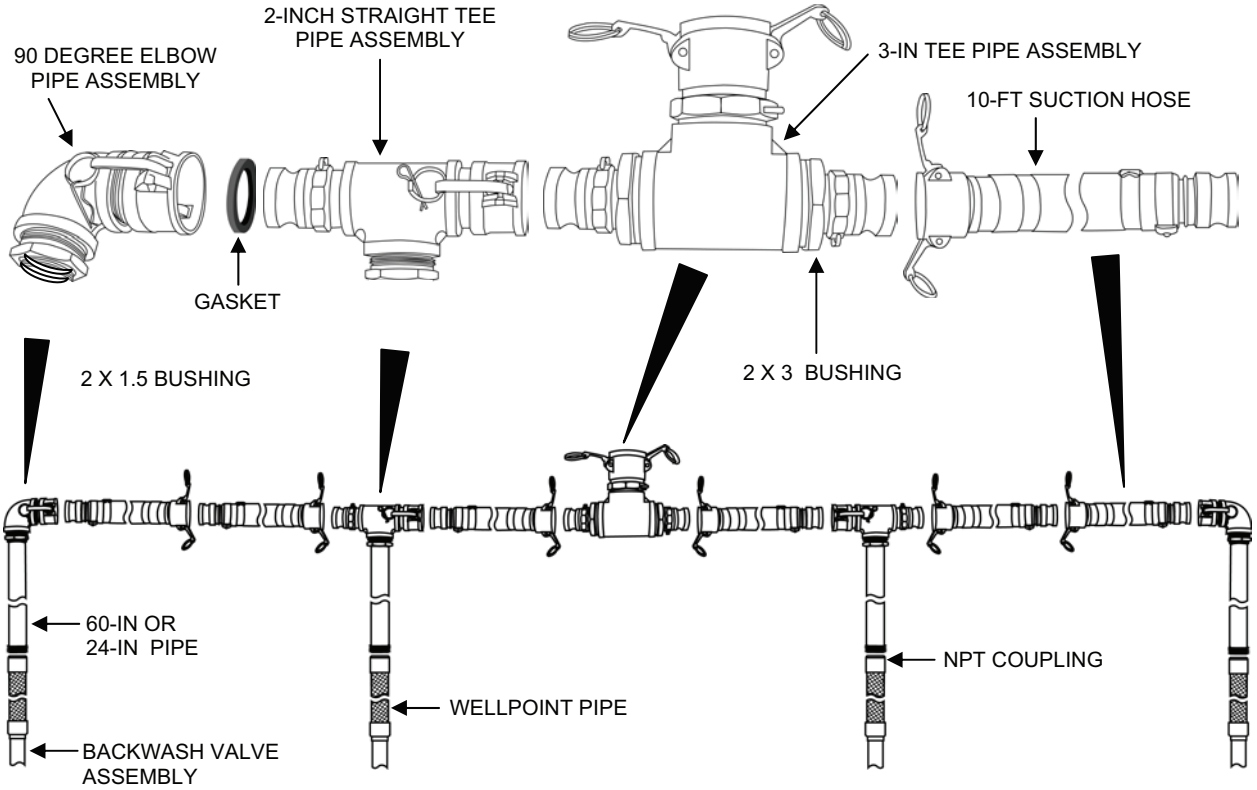

Figure 1. Ocean Intake Structure System (OISS) Components.

END OF WORK PACKAGE

TACTICAL WATER PURIFICATION SYSTEM (TWPS) FIELD MAINTENANCE PROCEDURES DIESEL ENGINE AND FUEL TANK ASSEMBLY

0011 00

THIS SECTION COVERS
Replace, Repair, Service, Adjust

INITIAL SETUP

Maintenance Level
Field
Tools
Army: General Mechanic's Tool Kit (WP 0037)
Marine Corps: Common No. 1 Tool Set (WP 0037)
Torque Wrench (minimum 0-250 in.-lbs)
Reference
Refer to TM 10-4610-309-23P for repair parts information
Personnel Required
Two
Equipment Condition
TWPS removed from service or during operation as required

GENERAL

This work package contains information and procedures for replacing and servicing/adjusting components and assemblies of the diesel engine and the removable fuel tank assembly. These procedures apply to Raw Water System pump assembly P1 and Extended Product Water Distribution System pump assembly P8.

The procedures in this work package include:

- Diesel Engine Replacement
- Air Cleaner Assembly Replacement
- Air Heater Assembly Replacement
- Electric Starter Assembly Replacement
- Muffler Assembly Replacement
- Fuel Injection Pump Replacement
- Fuel Injection Valve Replacement
- Fuel Line Assemblies Replacement
- Fuel Tank Replacement
- Fuel Filter Service/Replacement
- Fuel Cock Replacement
- Engine Oil and Oil Filter Replacement
- Recoil Starter Replacement
- Fuel Injection Valve Service
- Intake/Exhaust Valve Clearance Adjustment
- Oil Level Service (Check/Add Oil)
- Bleed the Fuel System

All procedures in this work package, except diesel engine replacement, can be performed without removing the engine/pump unit from the skid.

REPLACE

Diesel Engine Replacement:

Parts (TM 10-4610-309-23P):
- Diesel engine
- Gasket, Outlet Flange
- Kit, Pump Seal Repair

Materials:
- Cloth, Abrasive (WP 0038, Table 1, item 14)
- Engine Lubricating Oil, 1 qt. (WP 0038, Table 1, item 31)
- Corrosion Preventive Compound (WP 0038, Table 1, item 19)
- Glycerin (WP 0038, Table 1, item 24)
- Container for collecting engine lubricating oil
- Clean, dry rags (WP 0038, Table 1, item 39)
- Sealing Compound (WP 0038, Table 1, item 40)

Equipment Condition:
- Diesel engine shut off and removed from the system

WARNING

If the engine has been running, the engine, its muffler and other components may be hot. Allow the engine and its components to cool before handling. Failure to observe this warning can result in burns.

NOTE

The engine and pump are bolted together. In order to replace the engine, the engine and pump assembly must be removed from the skid as a unit.

1. Remove the engine/pump assembly from the skid as follows:
   a. On the fuel tank assembly, close the fuel cock and uncouple the fuel supply and return line quick disconnect couplings (see Figure 1).

CAUTION

Potential cause of fuel pump and injection valve failure. Do not leave the fuel lines for the diesel engine and fuel tank disconnected. Failure to observe this caution may allow sand and dirt to enter the fuel system and result in fuel pump and injection valve failure.

   b. Couple the two tank fuel lines together and the two diesel engine fuel lines together.
   c. Lift the fuel tank assembly off the skid.

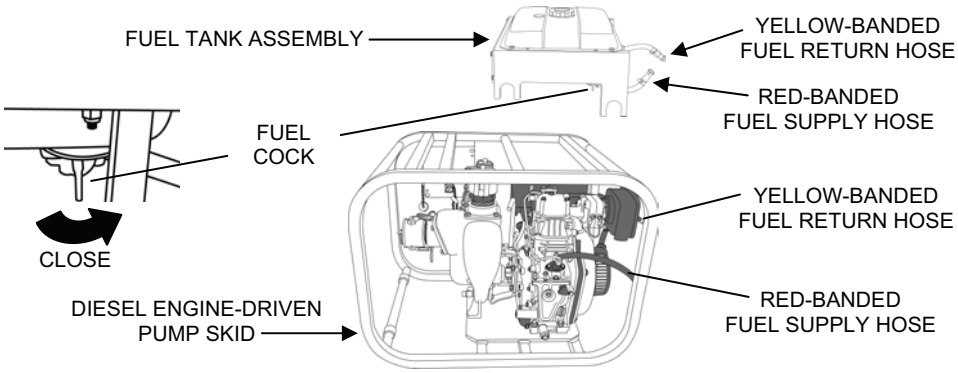

Figure 1. Diesel Engine Fuel Tank Assembly Removal.

d. Pull the recoil starter cord out a little, secure the rope, slip the handle down the rope and untie or cut off the knot at the end of the rope (see Figure 2).
e. Remove the handle from the rope and pull the rope end out of the eye bolt.
f. Slide the handle back onto the rope end and knot the end of the rope. Let the rope and handle retract to the recoil starter.

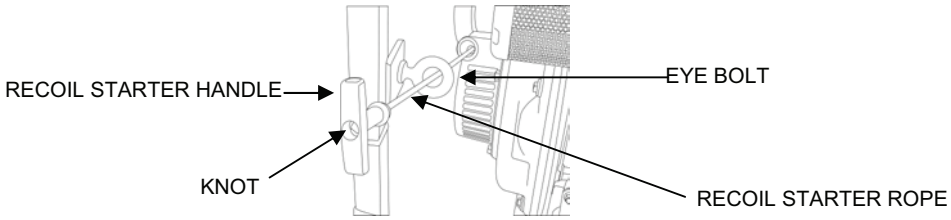

Figure 2. Recoil Starter Cord Removal / Installation from / into Rope Guide.

g. Open the pump drain valve and drain any water remaining in the pump, then close the valve (see Figure 3).
h. Drain the oil from the engine as described elsewhere in this work package.
i. Remove the oil drain extension and gaskets. Reinstall the drain plug on the engine so any remaining oil does not drip out.
j. Remove the exhaust shield plate that is attached to the top of the muffler assembly.

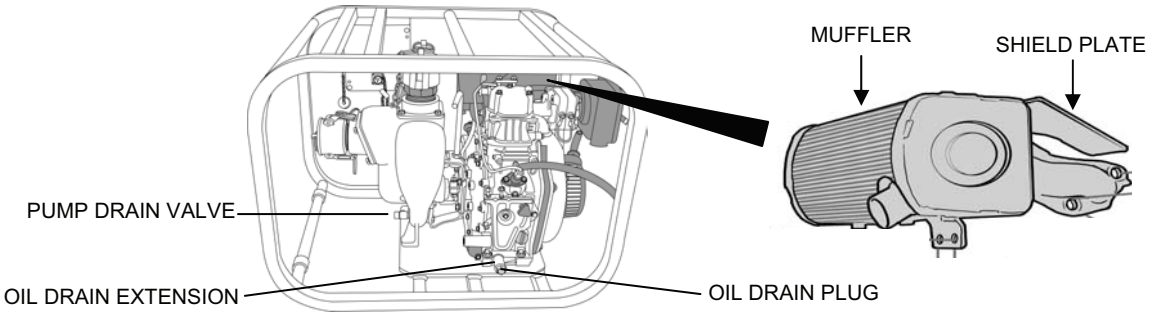

Figure 3. Diesel Engine Pump Drain, Oil Drain Extension, and Muffler Shield Plate.

k. Tag and disconnect the blue, red, and red-banded gray wires from the two terminals on the engine starter solenoid (see Figure 4).
l. Tag and disconnect the yellow wire from the front terminal of the air heater.
m. Disconnect the green ground wire from the rear terminal of the air heater, and the yellow jumper wire between the two terminals on the opposite side of the air heater.
n. Remove the green and black-banded gray wires from the ground connection on the engine case.
o. Remove the two bolts, flat washers, and lock washers that attach the power connector assembly to the side of the engine. Remove the connector assembly.
p. Remove the fuel supply and return line assemblies and clamps.
q. Remove the 4 bolts, flat washers, and lock washers that secure the engine/pump unit to the skid.

WARNING

Two person lift. Two people are required to safely move the engine/pump unit. Lift with your legs, not your back. Failure to observe this warning may result in back injury.

r. Slide the engine/pump assembly out the side of the skid.

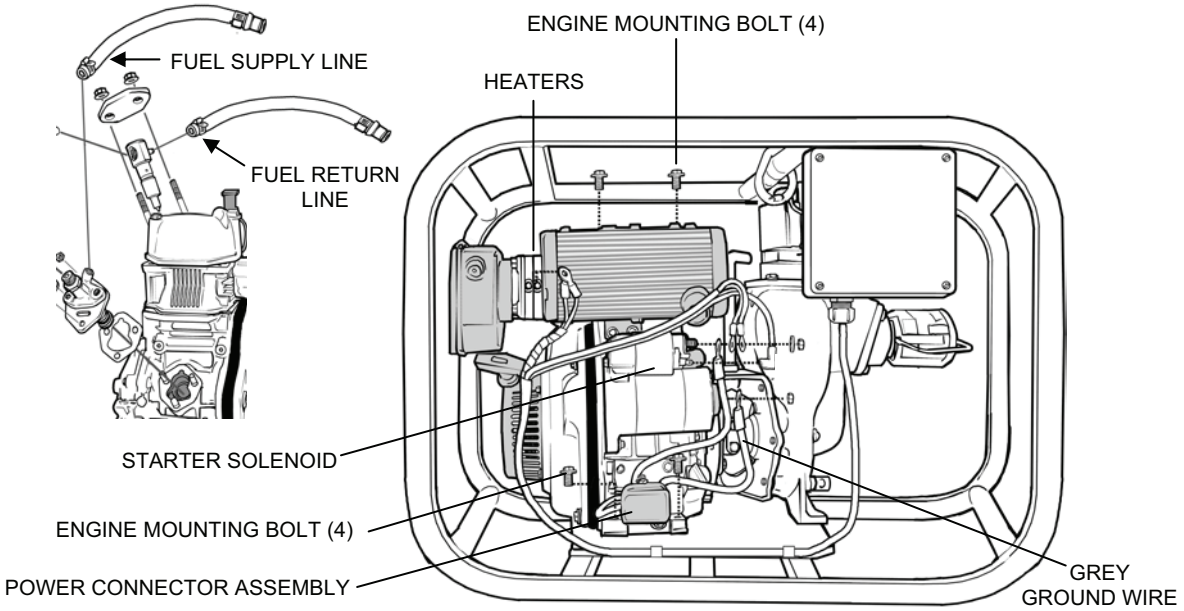

Figure 4. Removal of Diesel Engine from Skid.

NOTE

The pump must be taken apart to disconnect it from the engine. This is because the impeller clearance must be set when the pump is installed on the new engine. The pump seal seat, seal assembly, drive sleeve, and housing gasket will also be replaced.

2. Remove the pump and adapter from the engine as follows (see Figure 5):
   a. Remove the six nuts that attach the pump housing to the adapter.
   b. Loosen and remove the pump housing and gasket. Discard the gasket.
   c. Remove the coupling clamp assembly.
   d. Carefully pry the drive sleeve/impeller assembly off the engine drive shaft.
   e. Remove the retaining nut that attaches the drive sleeve to the pump impeller. Remove and discard the drive sleeve and the seal assembly.
   f. Remove the four bolts, four lock washers, and four flat washers that attach the adapter to the engine.
   g. Push the seal seat out of the adapter and discard it.

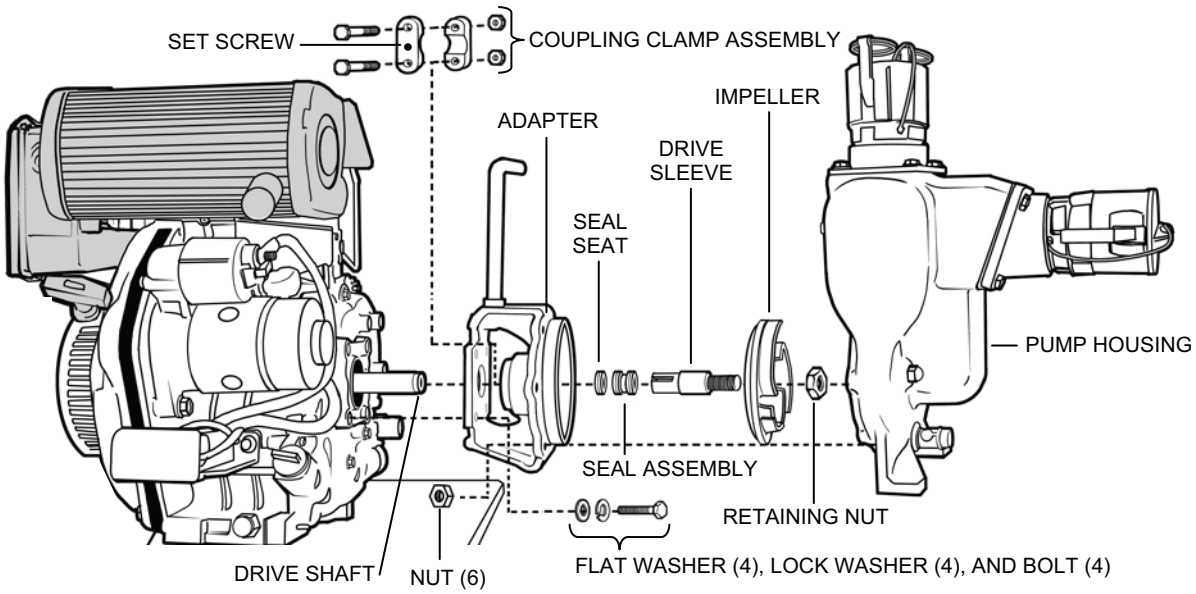

Figure 5. Pump Removal.

3. Prepare the new engine for installation as follows:
   a. Remove the oil drain plug from the new engine. Install the oil drain extension and washers that were removed from the old engine. Install the drain plug on the extension (see Figure 3).
   b. Install the power connector assembly onto the side of the engine using the two bolts, two flat washers, and two lock washers (see Figure 4).
   c. Install the fuel supply and return lines (see Figure 4).

NOTE

The fuel lines are color coded and are not interchangeable. Install the red-coded (supply) line on the fuel injection pump and the yellow-coded (return) line on the fuel injection valve.

   d. Install the exhaust shield plate on the top of the muffler assembly (see Figure 3).
4. Install the adapter and pump onto the new engine as follows (see Figure 5):
   a. Polish the engine drive shaft with fine abrasive cloth to remove any rust or corrosion.
   b. Clean the bore and mounting faces of the adapter.

c. Lubricate the new seal seat with glycerin.
d. Insert the beveled end of the seal seat into the adapter bore and press it in until it is seated.
e. Attach the adapter to the engine using 4 bolts, 4 flat washers, and 4 lock washers.
f. Insert the new drive sleeve into the impeller from the flat side and secure it with the retaining nut.
g. Lubricate the inner diameter of the new seal assembly with glycerin. With the rubber boot end toward the impeller, twist and slide the seal assembly onto the drive sleeve.
h. Lubricate the engine drive shaft and the inside diameter of the new drive sleeve with corrosion preventive compound.

CAUTION

Improper assembly can cause damage to the drive sleeve and engine drive shaft. Do NOT place a key between the drive shaft and drive sleeve. Do NOT force the sleeve onto the shaft. Failure to observe this caution can make impeller clearance adjustments and future removal of the drive sleeve difficult, and may cause damage to the drive sleeve and/or engine drive shaft.

NOTE

If the drive sleeve does not easily slide onto the shaft, it may be necessary to remove burrs from the shaft.

i. Slide the impeller and drive sleeve assembly onto the engine drive shaft.
j. Place a new housing gasket between the adapter and the pump housing.
k. Fit the pump onto the adapter and thread a nut on two opposing threaded studs to secure the pump to the adapter. Tighten the two nuts.

5. Set the gap between the impeller and the pump wear plate as follows (see Figure 6):
   a. Remove the four cap screws and four lock washers that secure the outlet flange to the pump housing.
   b. Carefully remove the pump flange to avoid damaging the gasket between the flange and the pump housing.
   c. If the gasket is damaged, replace it.
   d. Look through the outlet into the pump. Turn the impeller drive sleeve and impeller by hand until you see the impeller near the wear plate.
   e. Insert a 0.015 – inch feeler gauge between the impeller and wear plate. Move the impeller forward or backward as needed to provide a gap of 0.015 to 0.017-inch.
   f. Make sure the coupling clamp set screw, a drive sleeve slat, and the motor shaft keyway are aligned.
   g. Tighten the coupling clamp assembly to secure the impeller drive sleeve to the engine drive shaft.

CAUTION

New engines are shipped without lubricating oil. Add oil to the engine before operating it or equipment damage will result.

h. Add oil to the new engine. Refer to **SERVICE/ADJUST** and **Oil Level**.
i. Turn the engine drive shaft slowly to rotate the impeller by pulling on the hand starter.

j. Make sure that there is a minimum gap of 00.015-inch between the impeller and wear plate through the entire rotation of the impeller.
k. Torque the coupling clamp assembly nuts to 216 in.-lbs.
l. Tighten the coupling clamp set screw into the drive shaft keyway.

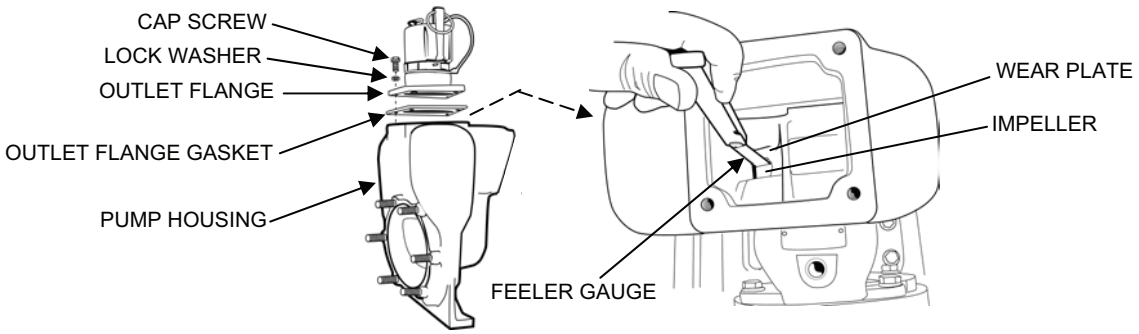

Figure 6. Impeller Clearance Adjustment.

6. Complete the pump installation as follows:
   a. Apply sealing compound to the threads of the remaining four threaded studs extending from the pump housing through the adapter (WP 0038, Table 1, item 40). Install the nuts onto the studs.
   b. Remove the two nuts initially installed onto opposing studs. Apply sealing compound to the stud threads and reinstall the nuts (WP 0038, Table 1, item 40).
   c. Reinstall the pump outlet flange and gasket.
7. Install the engine/pump assembly on the pump skid as follows (see Figure 4):

WARNING

Two person lift. Two people are required to safely move the engine/pump assembly. Lift with your legs, not your back. Failure to observe this warning may result in back injury.

   a. Position the engine/pump unit on the skid and bolt it in place using four bolts, flat washers, and lock washers.
   b. Connect the blue, red, and red-banded gray wires to the two terminals on the engine starter solenoid.
   c. Connect the green and black-banded gray wires to the ground connection on the engine case. Connect the other end of the green wire to the rear terminal of the air heater.
   d. Connect the yellow wire to the front terminal of the air heater.
   e. Connect the yellow jumper wire between the two terminals on the opposite side of the air heater.
   f. Pull the recoil starter rope out past the skid frame, secure the rope, slip the handle down the rope and untie or cut off the knot at the end of the rope (see Figure 2).
   g. Remove the handle from the rope and thread the rope through the eye bolt.
   h. Slide the handle back onto the rope end and knot the end of the rope. Let the rope and handle retract to the eye bolt.

Air Cleaner Assembly Replacement:

Parts (TM 10-4610-309-23P):
Air cleaner assembly
Gasket

Replace the air cleaner assembly as follows (see Figure 7):
1. Remove the air cleaner cover nut and pull off the cover.
2. Remove the air filter element.
3. Remove the three bolts that secure the air cleaner case to the air intake bend cap. Remove the case and gasket.
4. Install the new air cleaner case and gasket and secure with the three bolts.
5. Reinstall the air filter element or replace with a new element.
6. Install the new air cleaner cover and secure it with the cover nut.

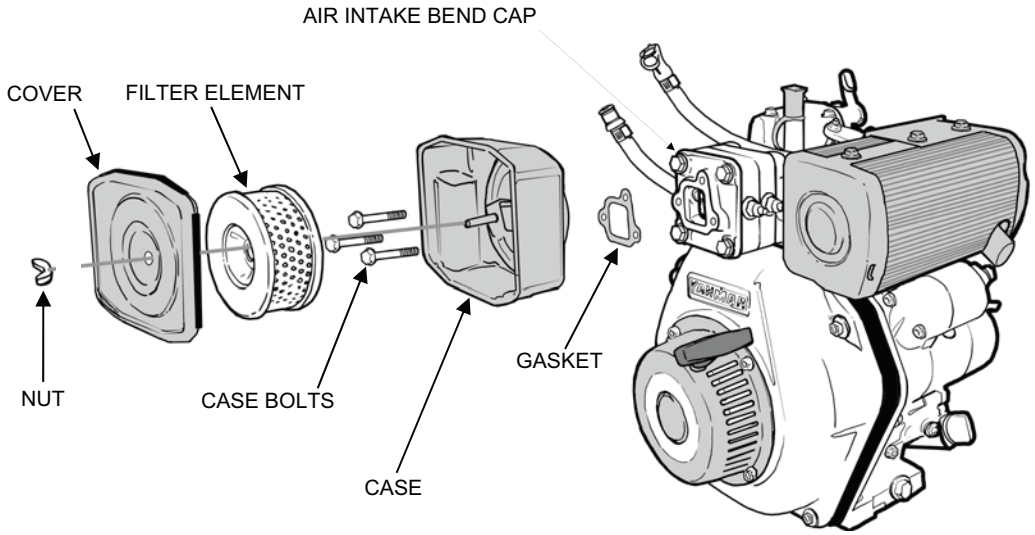

Figure 7. Air Cleaner Assembly Removal.

Air Heater Assembly Replacement:

Parts (TM 10-4610-309-23P):
Heating Element (one or two as required)
Gasket (as required)

Replace the air heaters as follows (see Figure 8):

1. Remove the air cleaner assembly. Refer to **REPLACE** and **Air Cleaner Assembly**.
2. Tag and disconnect the yellow (power) and green (ground) wires from the heating elements. Remove the short yellow jumper wire between the terminals of the two elements.
3. Remove the four bolts that secure the heating elements to the air intake bend cap. Remove the cap, elements, and metal gaskets.
4. Inspect the metal gaskets for damage and replace as required.
5. Install the air intake bend cap, gaskets, and heating elements, and secure them with the four bolts.
6. Reattach the power, ground, and jumper wires to the heating elements.
7. Reinstall the air cleaner assembly.

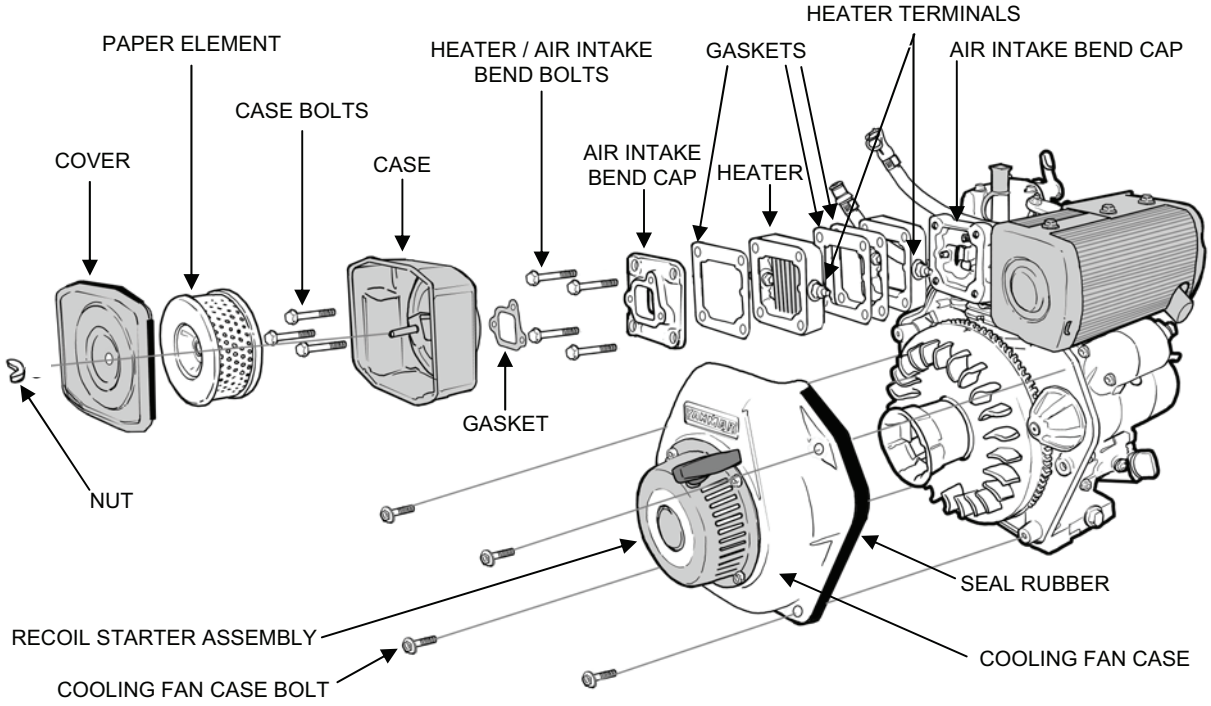

Figure 8. Air Heater Assembly Replacement.

Electric Starter Assembly Replacement:

Parts(TM 10-4610-309-23P):
Starter assembly

Replace the electric starter assembly as follows (see Figure 9):

1. Tag and disconnect the blue and red, and black-banded gray wires from the two terminals on the starter solenoid.
2. Unbolt and remove the starter assembly.
3. Install the new starter using the two bolts.
4. Connect the wires to the two terminals on the starter solenoid.

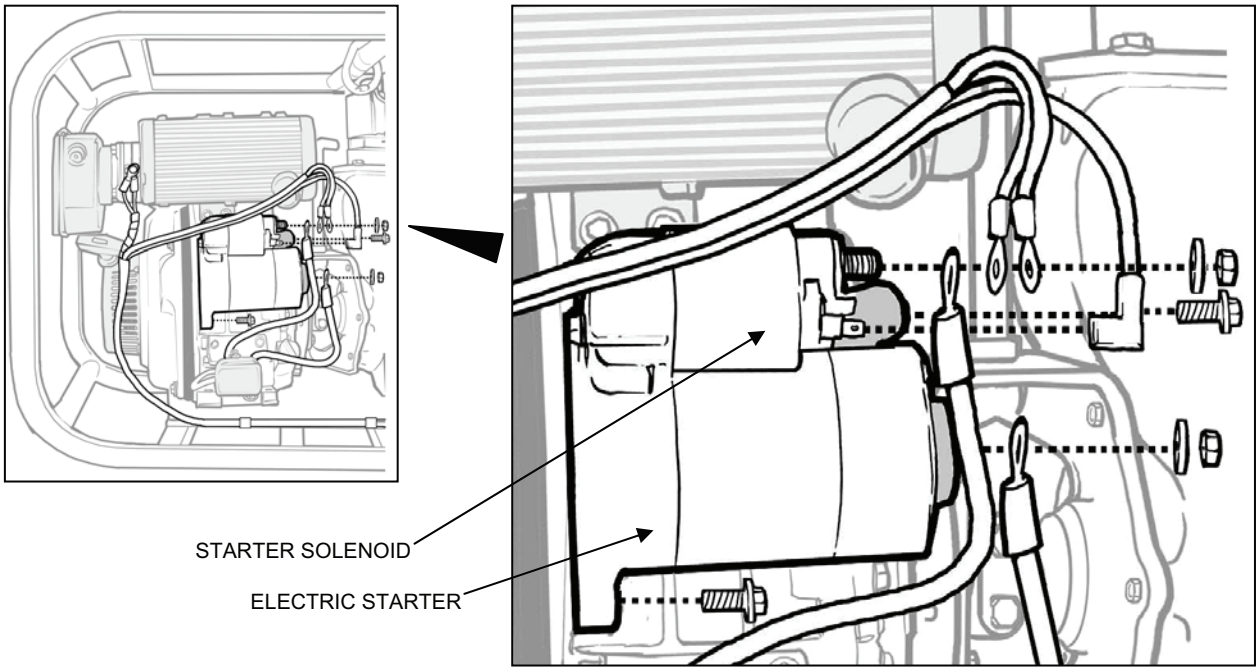

Figure 9. Electric Starter Removal.

Muffler Assembly Replacement:

Parts (TM 10-4610-309-23P):
Muffler assembly
Gasket

Replace the muffler assembly as follows (see Figure 10):

WARNING

If the engine has been running, the muffler may be hot. Allow the muffler to cool before handling. Failure to observe this warning can result in burns.

1. Remove the fuel tank assembly. Refer to **REPLACE** and **Diesel Engine**.
2. Unbolt and remove the exhaust shield plate from the top of the muffler assembly.
3. Remove the two nuts and the two bolts that attach the muffler assembly to the engine. Remove and discard the muffler assembly.
4. Scrape any remaining gasket material off the cylinder head.
5. Attach the new gasket and muffler assembly using the two nuts and two bolts.
6. Install the exhaust shield plate on the top of the muffler assembly with two bolts.
7. Install the fuel tank assembly.

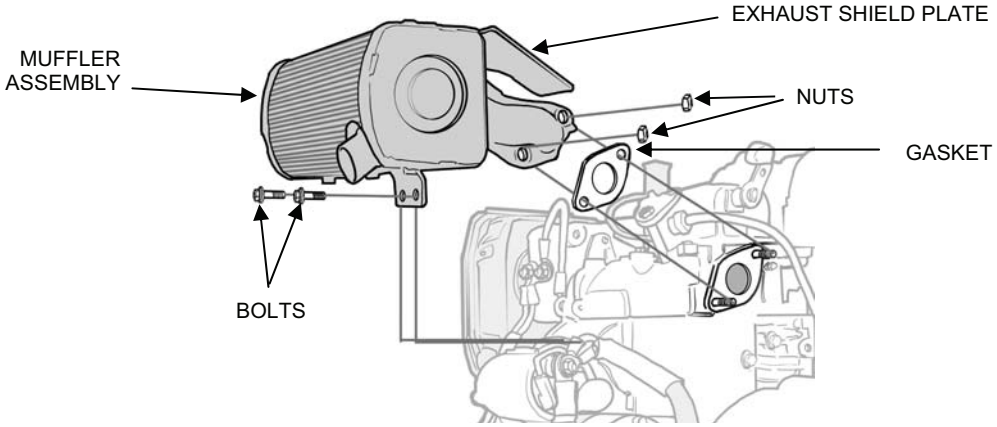

Figure 10. Muffler Assembly Replacement.

Fuel Injection Pump Replacement:

Parts (TM 10-4610-309-23P):
Fuel injection pump
Materials:
Dry rag (WP 0038, Table 1, item 39)

Replace the fuel injection pump as follows (see Figure 11):

WARNING

If the engine has been running, it may be hot enough to ignite any fuel that leaks out during fuel system maintenance. Make sure that the engine and its parts are cool to the touch before disassembling any part of the fuel system. Failure to observe this warning can result in a fire and serious personal injury.

1. Remove the fuel tank assembly from the pump skid. Refer to **REPLACE** and **Diesel Engine**.
2. Remove the fuel supply hose assembly, clamp, and fuel injection pipe.

NOTE
Be careful not to bend the fuel injection pipe while removing it.

3. Remove the three injection pump mounting nuts, inspection window cover, and gasket.
4. Pull the fuel injection pump out of the engine and set it aside, using a rag to catch any fuel that may drip out.

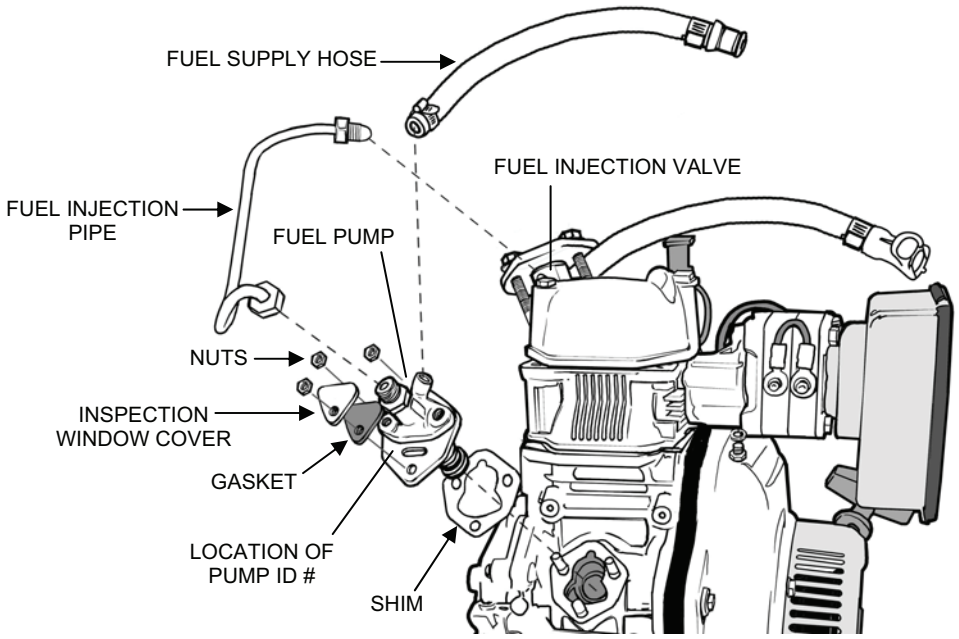

Figure 11. Fuel Injection Pump Replacement.

NOTE

The metal shim under the fuel injection pump base plate is required for proper operation. Be sure the shim is in place when replacing the fuel injection pump.

5. Verify that the ID number stamped on the left side of the new pump's base plate matches the ID number (48R) on the old pump.

NOTE

Do NOT install the new pump if the ID number doesn't match. Fuel injection pumps are not interchangeable between engine models. Be sure to properly orient the pump when installing it.

6. Install the shim, the new pump and the inspection window cover and gasket. Fasten them in place using the three nuts. Torque the nuts to 95-113 in.-lbs.
7. Reattach the fuel injection pipe to the pump and fuel injection valve.
8. Reinstall the fuel supply hose assembly using the clamp.

After replacing the fuel injection pump, bleed the fuel system of trapped air as follows (see Figure 12):

1. Install the fuel tank assembly on the pump skid and connect the fuel supply and return line quick disconnect couplings.
2. If necessary, pour a small amount of fuel into the tank.
3. Open the fuel cock.
4. Place the engine speed control knob at the Start position.
5. Disconnect the fuel injection pipe from the fuel injection valve.
6. Push the engine decompression lever down (non-compression position) and hold it there.
7. Place a rag in front of the disconnected end of the fuel injection pipe.
8. Pull the recoil starter. Stop when you see fuel spraying out the fuel injection pipe.
9. Reconnect the fuel injection pipe to the fuel injection valve.

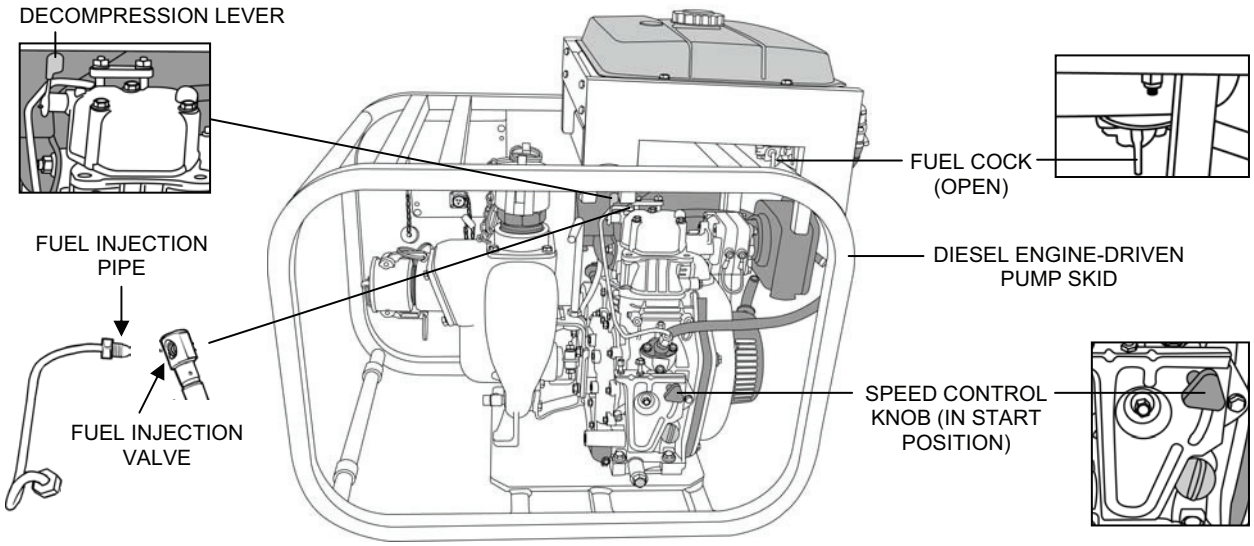

Figure 12. Diesel Engine Fuel System Bleed.

Fuel Injection Valve Replacement:

Parts (TM 10-4610-309-23P):
Fuel injection valve
Nozzle spacer sleeve
Materials:
Clean rags (WP 0038, Table 1, item 39)

Remove the fuel injection valve as follows (see Figure 13):

WARNING

If the engine has been running, it may be hot enough to ignite any fuel that leaks out during fuel system maintenance. Make sure that the engine and its parts are cool to the touch before disassembling any part of the fuel system. Failure to observe this warning can result in a fire and serious personal injury.

1. Remove the fuel tank assembly from the pump skid. Refer to **REPLACE** and **Diesel Engine**.
2. Remove the fuel return hose assembly and clamp.
3. Disconnect the fuel injection pipe from the fuel injection valve.
4. Remove the two nuts and retaining plate from the top of the valve.

CAUTION

When removing the fuel injection valve, be careful not to damage the nozzle spacer and nozzle spacer sleeve. When setting the valve down, wrap it in a cloth to protect the nozzle tip. Do not place the nozzle tip directly on the ground. Failure to observe this caution may result in damage to the nozzle tip or spacer sleeve.

5. Carefully pull the valve out of the cylinder head. If it does not come out easily, temporarily reconnect the fuel injection pipe and gently pry up on the connection nut to loosen the valve.
6. Remove the nozzle spacer sleeve.

NOTE

The spacer sleeve may stick in the cylinder head when you remove the fuel injection valve. Be sure to remove the spacer sleeve before installing the new valve.

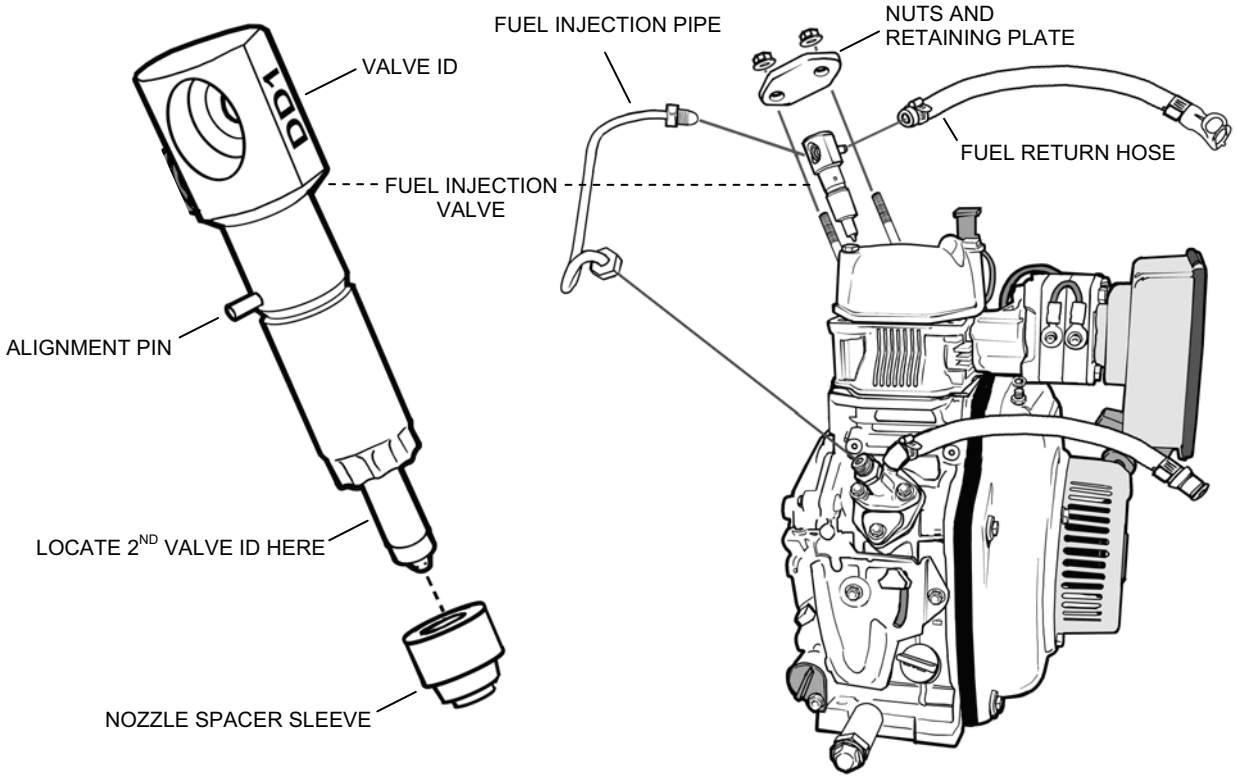

Figure 13. Fuel Injection Valve Replacement.

Install the new fuel injection valve as follows (see Figure 13):

NOTE

Wipe any dirt or residue from around the cylinder head sleeve where the fuel injection valve is inserted. Wipe out from the opening to prevent dirt from falling into the sleeve opening.

1. Verify that the two identification numbers on the new valve match those on the old valve.

NOTE

Do NOT install the new valve if the numbers don't match. Fuel injection valves are not interchangeable between engine models.

2. Install the nozzle spacer sleeve onto the valve.
3. Verify that the small alignment pin is in place on the side of the valve.
4. Line up the alignment pin with the slot in the cylinder head and insert the valve.
5. Install the retaining plate using two nuts. Torque the nuts to 95-113 in-lbs.
6. Attach the fuel injection pipe and fuel return hose assembly.
7. Reinstall the fuel tank assembly on the pump skid.

Fuel Line Assemblies Replacement:

Parts (TM 10-4610-309-23P):
- Engine fuel supply line assembly
- Engine fuel return line assembly
- Fuel tank fuel supply line assembly
- Fuel tank fuel return line assembly

Materials:
- Container for collecting drainage from the fuel tank
- Clean rags (WP 0038, Table 1, item 39)

Replace either fuel line assembly on the fuel tank as follows (see Figure 15):

1. Remove the fuel tank assembly from the pump skid. Refer to **REPLACE** and **Diesel Engine**.
2. If necessary, drain the contents of the tank into a container.
3. Loosen the screw clamp and remove the fuel line assembly. Discard the assembly and clamp.
4. Install the new fuel line assembly and clamp.

NOTE

The supply line (coded red) attaches to the fuel cock, and the return line (coded yellow) attaches to the fitting on the side of the fuel tank. The lines have different diameters and are not interchangeable.

5. Reinstall the fuel tank assembly onto the pump skid.

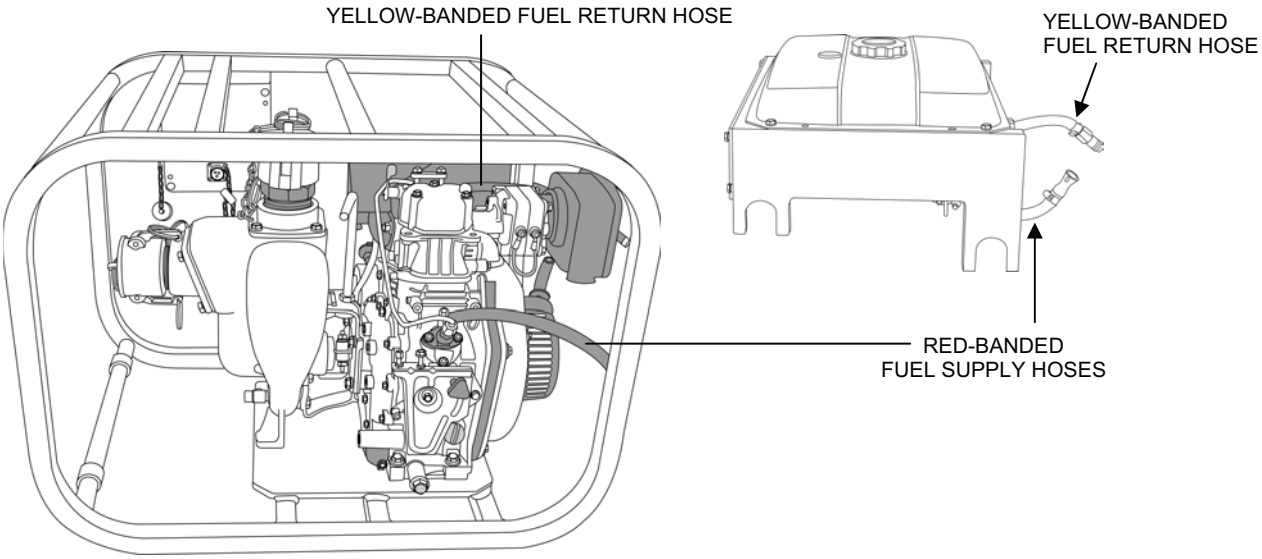

Figure 14. Diesel Engine Fuel Line Replacement.

Replace either fuel line assembly on the engine as follows (see Figure 14):

1. Loosen the screw clamp and remove the fuel line assembly. Discard the assembly and clamp.
2. Install the new fuel line assembly and clamp.

NOTE

The supply line (coded red) attaches to the fuel pump, and the return line (coded yellow) attaches to the fuel injection valve. The lines have different diameters and are not interchangeable.

Fuel Tank Replacement:

Parts (TM 10-4610-309-23P):
Fuel tank
Materials:
Container for collecting drainage from the fuel tank
Clean rags (WP 0038, Table 1, item 39)

Replace the fuel tank as follows (see Figure 15):

NOTE
The new fuel tank will already have a screen filter and fuel filter installed.

1. Remove the fuel tank assembly from the pump skid. Refer to **REPLACE** and **Diesel Engine**.
2. Remove the drain plug and drain the contents of the tank into a container.
3. Remove the supply and return fuel line assemblies and clamps.
4. Remove the four cap screws, four lock washers, and four flat washers that attach the fuel tank to the frame. Remove and discard the tank.
5. Attach the new tank to the frame using four cap screws, four lock washers, and four flat washers. Be sure the tank is oriented so the fuel cock is toward the end of the frame with the longer legs.
6. Attach the supply and return fuel line assemblies using the two clamps.

NOTE
The fuel lines are color coded and are not interchangeable. The supply line is coded red and the return line is coded yellow.

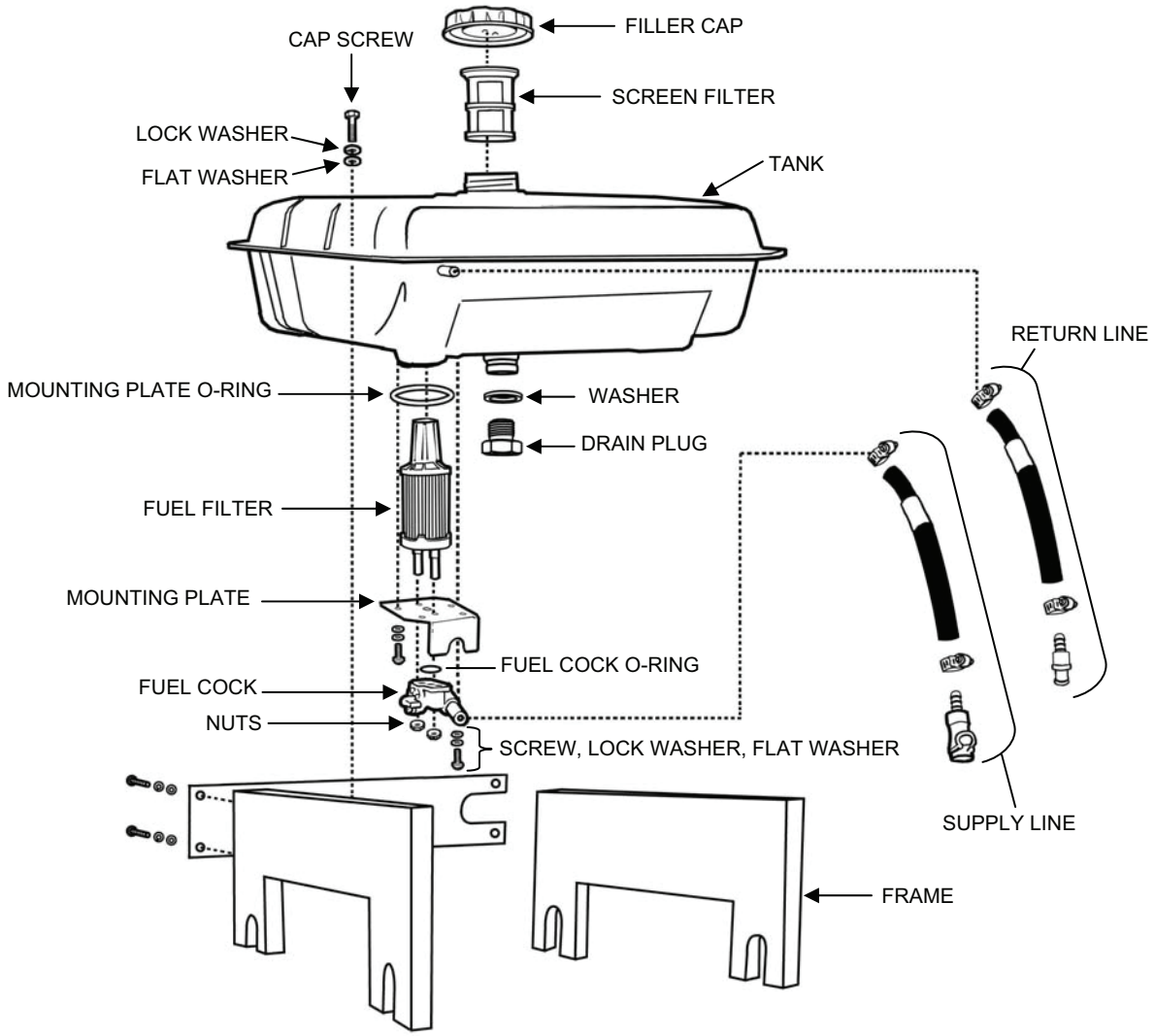

Figure 15. Fuel Tank Assembly Components.

Fuel Filter Service / Replacement:

Parts (TM 10-4610-309-23P):
Screen filter
Fuel Filter
O-ring (mounting plate)
Materials:
Container for collecting drainage from the fuel tank
Clean diesel fuel for cleaning the filters

Clean or replace the fuel filters as follows (see Figure 15):

1. Remove the fuel tank assembly from the pump skid. Refer to **REPLACE** and **Diesel Engine**.
2. Remove the drain plug and washer and drain the tank's contents into a container. Reinstall the plug and washer when the tank is empty.
3. Remove the filler cap and lift out the screen filter. Clean or replace it as necessary. Reinstall the screen filter and filler cap.
4. Remove the three screws, flat washers, and lock washers that attach the fuel cock assembly to the tank. Lift the assembly straight out until the fuel filter is clear of the tank. Remove and discard the mounting plate O-ring.
5. To replace the filter, remove the two nuts that attach it to the fuel cock. Remove and discard the filter. Attach a new filter to the fuel cock using the two nuts. Be sure that the small O-ring on the fuel cock is in place.
6. If the filter is not being replaced, clean it with clean diesel fuel.
7. Reinstall the fuel cock assembly on the tank using a new mounting plate O-ring and three screws, flat washers, and lock washers.

Fuel Cock Replacement:

Parts (TM 10-4610-309-23P):
Fuel Cock
O-ring
Materials:
Container for collecting drainage from the fuel tank
Clean rags (WP 0038, Table 1, item 39)

Replace the fuel cock as follows (see Figure 15):

1. Remove the fuel tank from the pump skid and drain. Refer to **REPLACE** and **Diesel Engine**.
2. Remove the fuel supply line and clamp from the fuel cock.
3. Remove the three screws, three lock washers, and three flat washers that attach the fuel cock assembly to the tank. Lift the assembly straight out until the fuel filter is clear of the tank. Remove and discard the mounting plate O-ring.
4. Remove the two nuts that attach the fuel cock to the fuel filter. Discard the fuel cock.
5. Attach the new fuel cock to the fuel filter using two nuts. Be sure the small O-ring on the fuel cock is in place.
6. Install the fuel cock assembly on the tank using a new mounting plate O-ring and three screws, three lock washers, and three flat washers.
7. Attach the fuel supply line assembly to the fuel cock using the clamp.

Engine Oil and Oil Filter Replacement:

Parts (TM 10-4610-309-23P)l:
- Oil filter
- Oil filter o-ring
- Engine lubricating oil (BII) (WP 0038, Table 1, item 31)

Materials:
- Approve container for collecting oil drained from the engine
- Clean rags (WP 0038, Table 1, item 39)

Replace the engine oil and oil filter as follows (see Figure 16):

NOTE
Make sure the engine is sitting level so all of the oil will drain out.

1. Position a container below the oil drain plug.
2. Remove the oil filler cap/dipstick.
3. Remove the drain plug and drain the oil. Reinstall the drain plug after all the oil has drained out.
4. Remove the oil filter lock bolt.
5. Remove and discard the oil filter and the filter O-ring.
6. Install the replacement oil filter and O-ring and secure with the lock bolt.

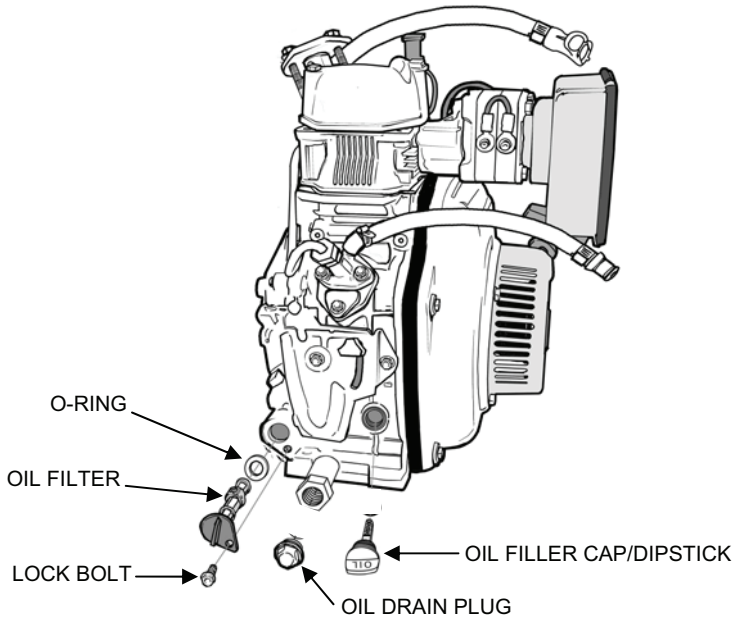

Figure 16. Engine Oil and Filter Replacement.

7. Fill the crankcase with oil until the level reaches the full mark on the dipstick (approximately 3/4 of a quart).
8. Screw the oil filler cap/dipstick back into the filler port.

Recoil Starter Replacement:

Parts (TM 10-4610-309-23P):
Recoil starter assembly

Replace the recoil starter as follows (see Figure 17):

1. Pull the recoil starter cord out a little, secure the rope, slip the handle down the rope and untie or cut off the knot at the end of the rope.
2. Remove the handle from the rope and pull the rope end out of the eye bolt.
3. Slide the handle back onto the rope end and knot the end of the rope. Let the rope and handle retract to the recoil starter.
4. Remove the 4 bolts that attach the recoil starter to the cooling fan case. Remove the starter.
5. Attach the new recoil starter to the cooling fan case with the four bolts.
6. Pull the recoil starter rope out past the skid frame, secure the rope, slip the handle down the rope and untie or cut off the knot at the end of the rope.
7. Remove the handle from the rope and thread the rope through the eye bolt.
8. Slide the handle back onto the rope end and knot the end of the rope. Let the rope and handle retract to the eye bolt.

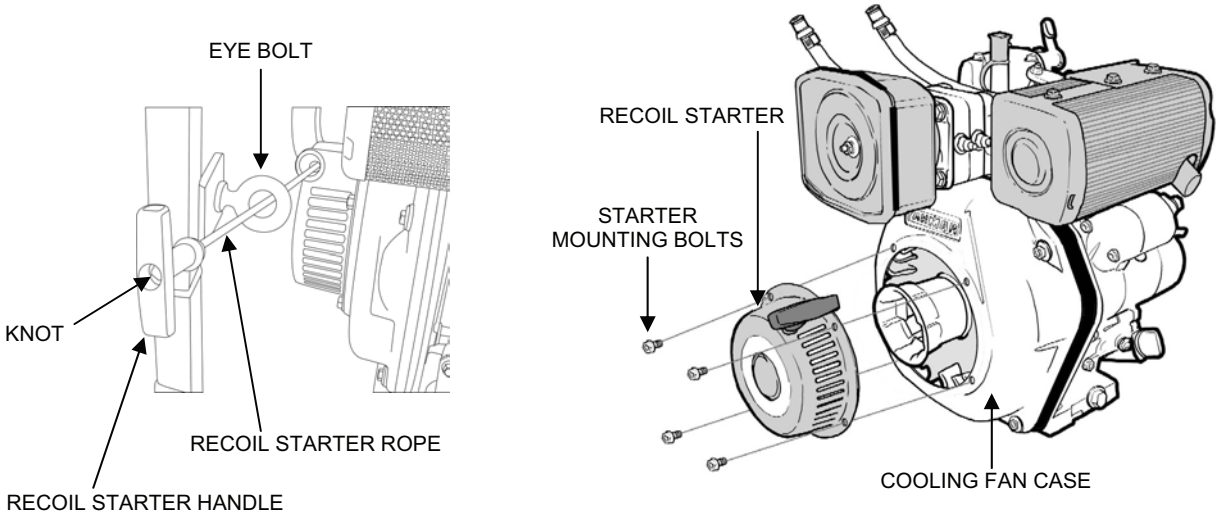

Figure 17. Recoil Starter Replacement.

SERVICE/ADJUST

Fuel Injection Valve Service:

Parts (TM 10-4610-309-23P):
Nozzle gasket
Material:
Clean rags (WP 0038, Table 1, item 39)

Clean a clogged fuel injection valve as follows (see Figure 18):

WARNING

If the engine has been running, it may be hot enough to ignite any fuel that leaks out during fuel system maintenance. Make sure that the engine and its parts are cool to the touch before disassembling any part of the fuel system. Failure to observe this warning can result in a fire and serious personal injury.

1. Remove the fuel injection valve from the engine. Refer to **REPLACE** and **Fuel Injection Valve**.
2. Check the fuel injection valve nozzle tip for carbon deposits.

NOTE

Carbon deposits build up on the nozzle in the form of flowers. Flowering significantly lowers combustion performance.

3. Clean the carbon deposits off of the nozzle tip, and especially around the four fuel injection ports, by wiping the exterior with a clean rag.

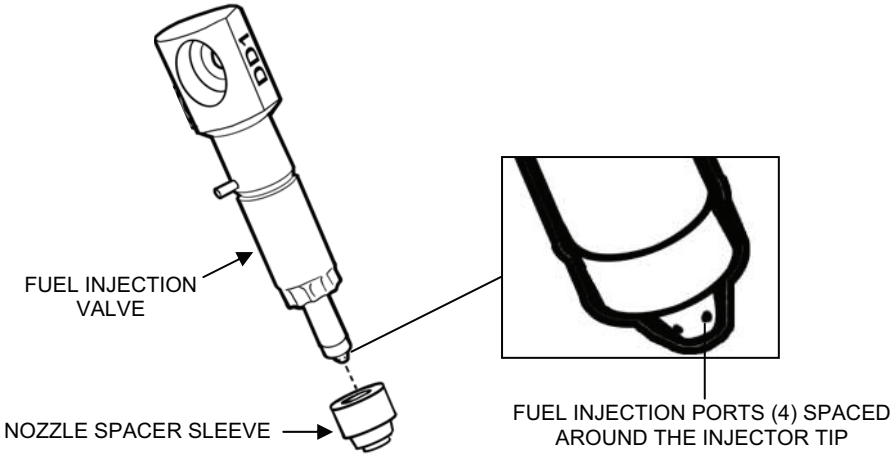

Figure 18. Fuel Injection Valve Nozzle Tip.

4. Reinstall the fuel injection valve. Refer to **REPLACE** and **Fuel Injection Valve**.

Intake and Exhaust Valve Clearance Adjustment:

Parts (TM 10-4610-309-23P):
Cylinder head cover gasket

Remove the cooling fan case and cylinder head cover as follows (see Figure 19):

1. Remove the four bolts with washers securing the cooling fan case and lift the cooling fan case off the engine.

CAUTION

Be careful not to damage the fins on the flywheel.

2. Remove the rubber detent plunger from the oil port.
3. Remove the three cylinder head cover bolts and lift cover off of the cylinder head. Remove and discard the cover gasket.

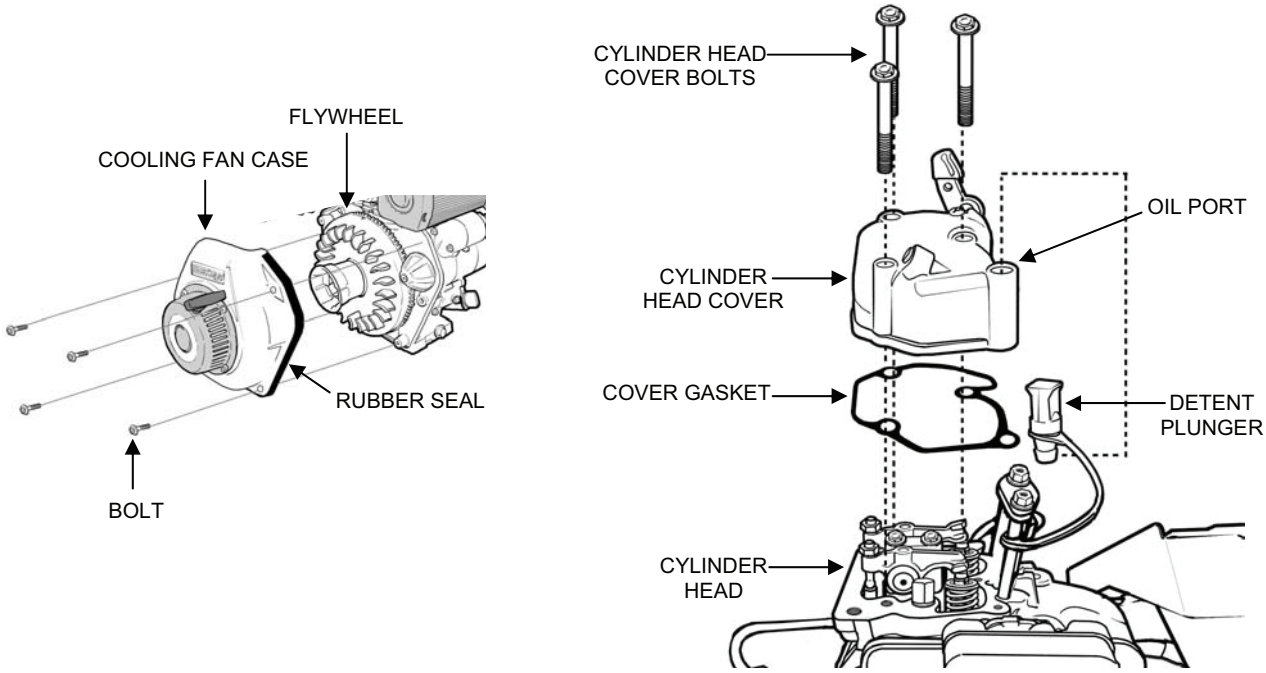

Figure 19. Cooling Fan Case and Cylinder Head Cover Removal.

Check/adjust the intake and exhaust valve clearances as follows (see Figure 20 and Figure 21):

1. Turn the flywheel by hand in the direction of least resistance until the “T” position mark on the flywheel lines up with the V notch on the cylinder body fin (see Figure 20). This places the engine crankshaft at T.D.C. (Top Dead Center). In this position, one of the valve rocker arms will have pressure on it and the other will not.

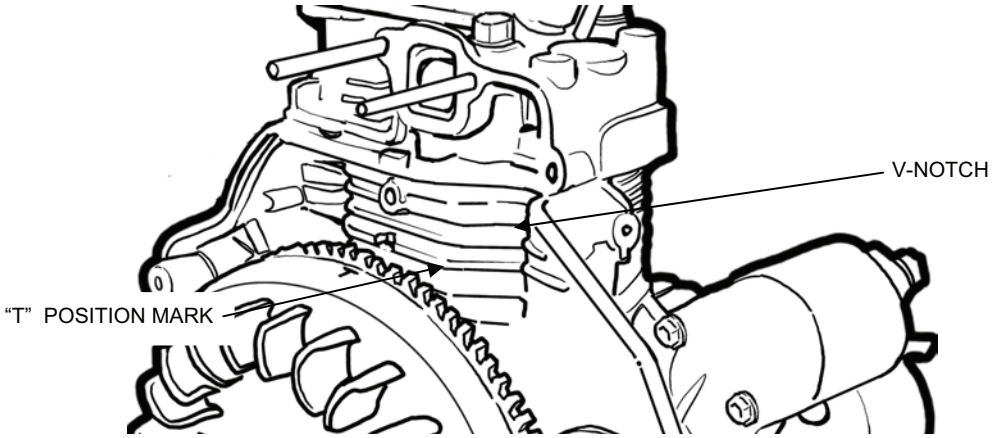

Figure 20. Setting the Crankshaft to Top Dead Center.

NOTE

To ensure accurate measurements, check the intake and exhaust valve clearances only when the engine is cold.

2. Using a thickness gauge, check the clearance between the rocker arm and valve stem for the rocker arm that has no pressure on it. The clearance should be 0.004" to 0.008".
3. If the clearance is out of specification, loosen the lock nut and turn the adjusting screw to set the correct clearance, then tighten the lock nut.
4. Rotate the flywheel 360 degrees and repeat steps 2 and 3 for the other valve.

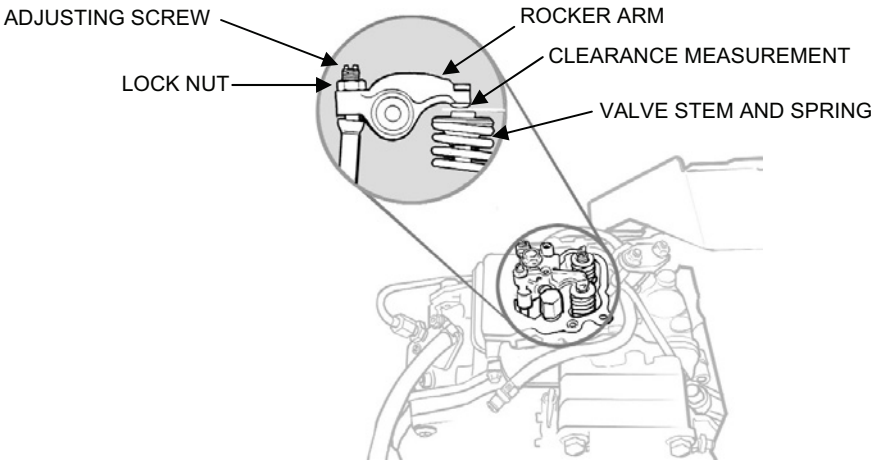

Figure 21. Intake/Exhaust Valve Clearance Adjustment.

5. Reinstall the cylinder head cover using a new gasket and the three bolts.
6. Insert the detent plunger into the port on the cover.
7. Reinstall the cooling fan case assembly with the four bolts, making sure the rubber seal is in the proper position.

Oil Level Service:

Materials:
Engine lubricating oil (WP 0038, Table 1 item 31)
Clean rags (WP 0038, Table 1, item 39)

Check the oil level as follows (see Figure 16):

NOTE
Make sure the engine is not running and is sitting level.

1. Remove the oil filler cap/dipstick and check the oil level. Add oil if necessary.
2. Screw the oil filler cap/dipstick back into the filler port.

Bleed the Fuel System:

Materials:
Clean rags (WP 0038, Table 1, item 39)

Bleed the fuel system of air as follows (see Figure 22):
1. Open the fuel cock.
2. Place the engine speed control knob at the Start position.
3. Disconnect the fuel injection pipe from the fuel injection valve.
4. Push the engine decompression lever down (non-compression position) and hold it there.
5. Place a rag in front of the disconnected end of the fuel injection pipe.
6. Pull the recoil starter. Stop when you see fuel spraying out the fuel injection pipe.
7. Reconnect the fuel injection pipe to the fuel injection valve.

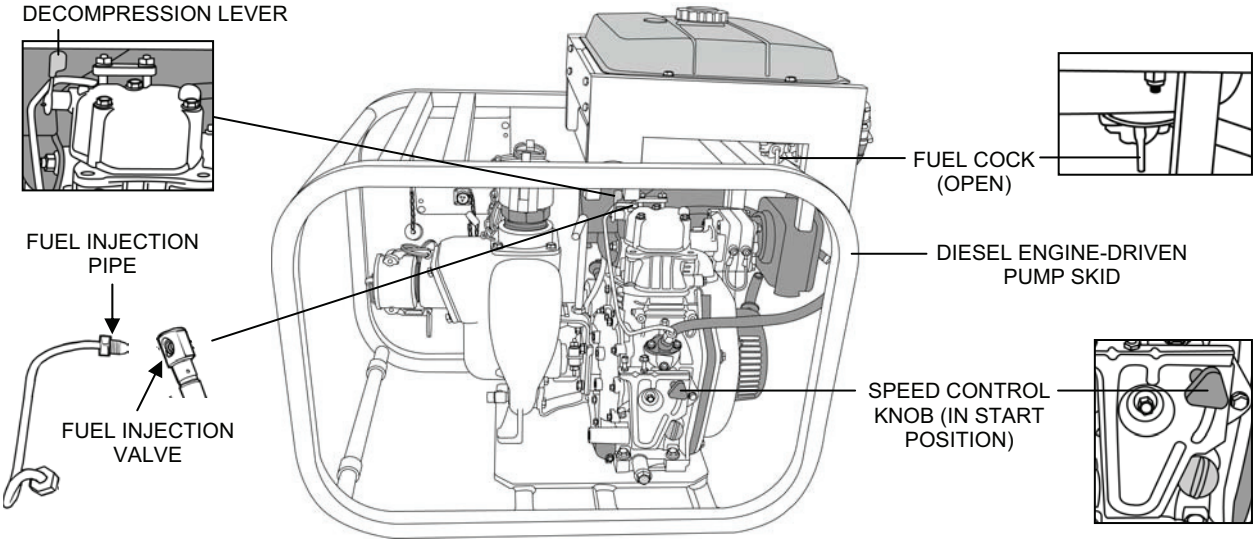

Figure 22. Diesel Engine Fuel System Bleed.

END OF WORK PACKAGE

TACTICAL WATER PURIFICATION SYSTEM (TWPS) FIELD MAINTENANCE PROCEDURES MICRO-FILTRATION SYSTEM

0012 00

THIS SECTION COVERS:
Replace, Repair

INITIAL SETUP:
Maintenance Level
Field
Tools
Army: General Mechanic's Tool Kit (WP 0037)
Marine Corps: Common No. 1 Tool Set (WP 0037)
Reference:
Refer to TM 10-4610-309-23P for repair parts information
Personnel Required
Two
Equipment Condition
TWPS removed from service or during operation as required

GENERAL:

The procedures covered in this work package include:

- Basket Strainer S-2 Replacement
- P-3 Skid Frame Replacement
- P-3 Skid Junction Box Replacement
- P-3 Skid Power Cable Replacement
- MF Feed Pump P-3 Electric Motor Cable Replacement
- MF Feed Pump P-3 Pump/Motor Assembly Replacement
- MF Feed Pump P-3 Electric Motor Replacement
- Solenoid Valve Manifold Assembly Replacement
- Solenoid Coil Replacement
- Solenoid Valve Replacement
- Waste Outlet Hoses and Adaptor A-09 Replacement
- MF Feed Tank T-1 Repair
- MF Feed Pump P-3 Repair
- Waste Out Rupture Disk RD-401 Repair

Maintenance procedures for the following Micro-Filtration System components are described in the Control Instruments Field Maintenance Procedures WP 0023 00:

- MF Feed Flow Element FE-101
- MF Feed Flow Transmitter FT-101
- MF Feed Pressure Transmitter PT–101
- Filtrate Pressure Indicator PI-201
- Filtrate Pressure Transmitter PT-102

Maintenance procedures for the following Micro-Filtration System components are described in the General Maintenance Field Maintenance Procedures WP 0027 00:

- Strainer Vent Sample Ball Valve V-110
- Filtrate Sample Ball Valve V-204
- Shell Drain Ball Valve V-403
- MF Inlet Butterfly Valve V-111
- Upper Feed Inlet Butterfly Valve V-112
- Lower Feed Inlet Butterfly Valve V-113

- Upper Filtrate Butterfly Valve V-201
- Filtrate Drain Butterfly Valve V-203
- Upper Shell Backwash Outlet Butterfly Valve V-401
- Lower Shell Backwash Outlet Butterfly Valve V-402
- Morin Actuators

REPLACE

Basket Strainer S-2 Replacement:

Parts (TM 10-4610-309-23P):
S-2 Basket Strainer
Personnel:
One
Equipment Condition:
TWPS at standby or short-term shutdown

Replace MF Basket Strainer S-2 as follows (see Figure 1):

1. Remove the basket strainer S-2 as follows:
   a. Open Basket Strainer S-2 Drain Valve V-109 to begin draining the strainer and the elbow pipe above the strainer.
   b. Open Basket Strainer S-2 Vent/Sample Valve V-110 to allow air into the elbow pipe so that the pipe and the top of the strainer can completely drain.
   c. Remove the smaller sanitary clamp that secures the strainer outlet to the elbow pipe.
   d. Remove the grooved coupling at the other end of the elbow pipe and remove the pipe.
   e. Remove the larger sanitary clamp that secures the top of the strainer to the strainer body.
   f. Lift the top of the strainer and the attached strainer basket out of the strainer body.

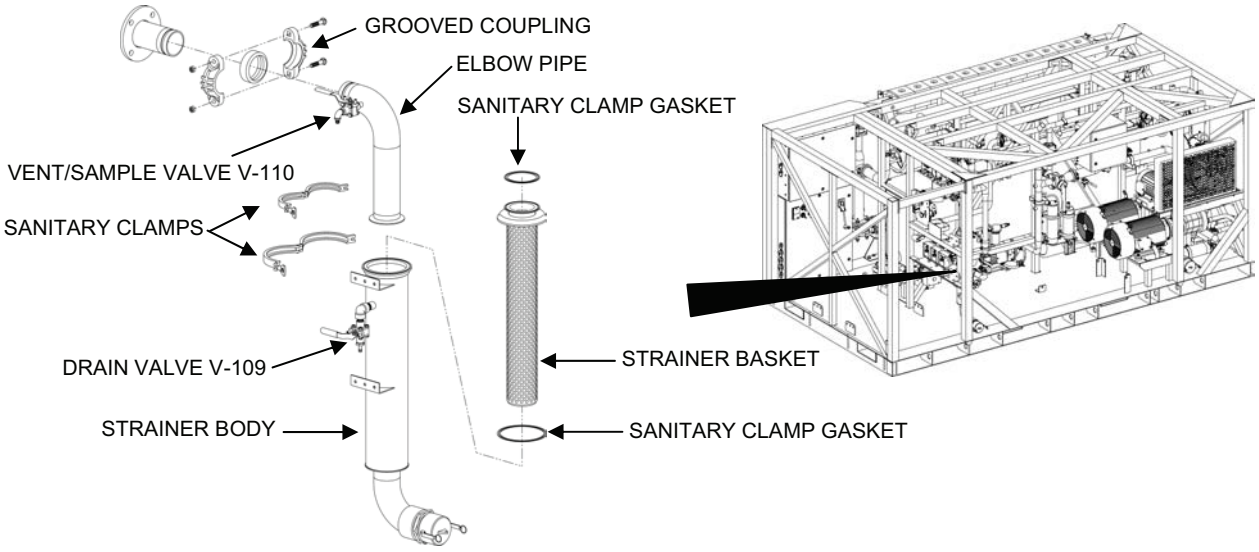

Figure 1. MF Basket Strainer S-2 Removal.

2. Install the new basket strainer as follows:
    a. Lower the strainer basket back into the strainer body.
    b. Inspect the gaskets for the grooved coupling and sanitary clamps. Replace if needed.
    c. Secure the top of the strainer to the body of the strainer using the larger sanitary clamp. Tap the clamp lightly around the circumference with a hammer and repeat tightening.
    d. Secure the lower end of the elbow pipe to the top of the strainer using the smaller sanitary clamp. Leave the clamp loose.
    e. Secure the upper end of the elbow pipe using the grooved coupling. Tighten the coupling.
    f. Tighten the smaller sanitary clamp. Tap the clamp lightly around the circumference with a hammer and repeat tightening.
    g. Close Strainer Drain Valve V-109.
    h. Close Strainer Vent/Sample Valve V-110.
    i. Start up the system and check for leaks at the valves and clamps.

P-3 Skid Frame Replacement:

Parts (TM 10-4610-309-23P):
P-3 pump skid frame
Equipment Condition:
P-3 Pump assembly removed from service and drained

Inspect the P-3 pump skid frame for damage. If the frame damage is repairable by welding, contact Field Maintenance. Replace the frame if it is beyond repair as follows (see Figure 2):

1. Disconnect the motor cable at the junction box.
2. Remove the four screws and washers that secure the junction box to the skid frame. Remove the junction box.
3. Remove the four bolts, flat washers, and lock washers that secure the pump/motor unit to the frame.

WARNING

Two person lift. Two people are required to safely move the pump/motor unit. Lift with your legs, not your back. Failure to observe this warning may result in back injury.

4. Slide the pump/motor unit out the side of the frame.
5. Position the pump/motor unit onto the new frame and secure it using the four bolts, flat washers, and lock washers.
6. Secure the junction box to the new frame using the four screws and washers. Be sure to orient the box so the side with two receptacles is facing inward.
7. Connect the motor cable to the proper receptacle on the junction box.

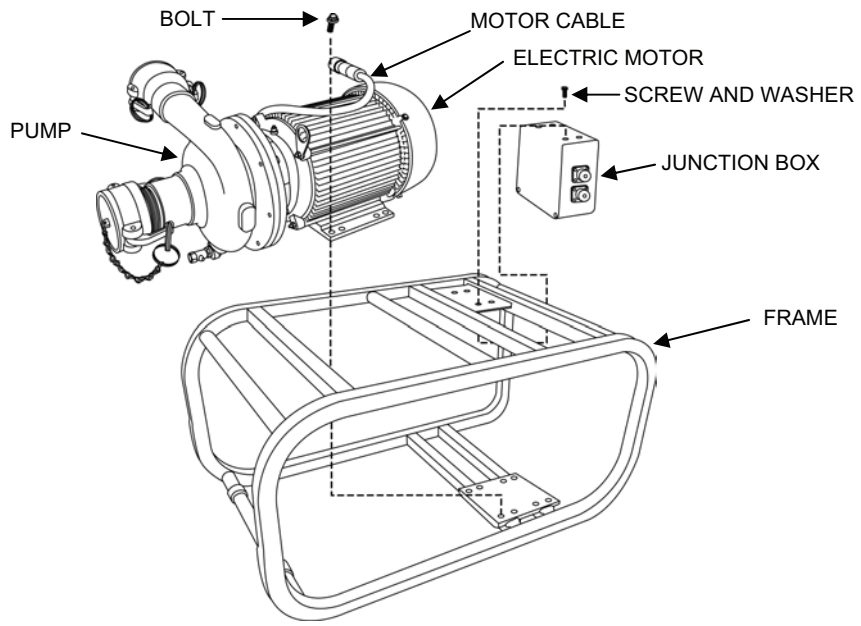

Figure 2. P-3 Pump Assembly Components.

P-3 Skid Junction Box Replacement:

Parts (TM 10-4610-309-23P):
P-3 pump skid junction box
Equipment Condition:
P-3 Pump assembly removed from service

Inspect the P-3 skid junction box for damage or corroded connectors. If damage or corrosion is severe enough to make it unsafe or non-functional, replace the box as follows (see Figure 2):

1. Disconnect the motor cable from the junction box.
2. Remove the screws and washers that secure the junction box to the skid frame. Remove the junction box.
3. Secure the new junction box to the frame using the retained hardware. Be sure to orient the box so the side with two receptacles is facing inward.
4. Connect the motor cable to the proper receptacle on the junction box.

P-3 Skid Power Cable Replacement:

Parts (TM 10-610-309-24P):
P-3 skid power cable
Equipment Condition:
P-3 Pump assembly removed from service

Inspect the power cable that connects the P-3 pump junction box to the Power Distribution Panel for damage. If the cable or the cable connectors are damaged so that it is unsafe to use, replace the cable.

MF Feed Pump P-3 Electric Motor Cable Replacement:

Parts (TM 10-4610-309-23P):
P-3 Electric Motor Cable
Gasket, Terminal Box, P-3 Electric Motor
Equipment Condition:
MF Feed Pump Assembly P-3 removed from service.

Replace the MF Feed Pump P-3 electric motor cable as follows (see Figure 3):

1. Disconnect the electric motor cable at the P-3 skid junction box.
2. Remove the motor terminal box cover.
3. Inspect the terminal box gasket and replace if needed.
4. Tag and disconnect the motor terminal wires from the motor cable wires.
5. Unscrew the cable ring nut from the terminal box.
6. Pull the cable end out of the terminal box and discard the old electric motor cable.

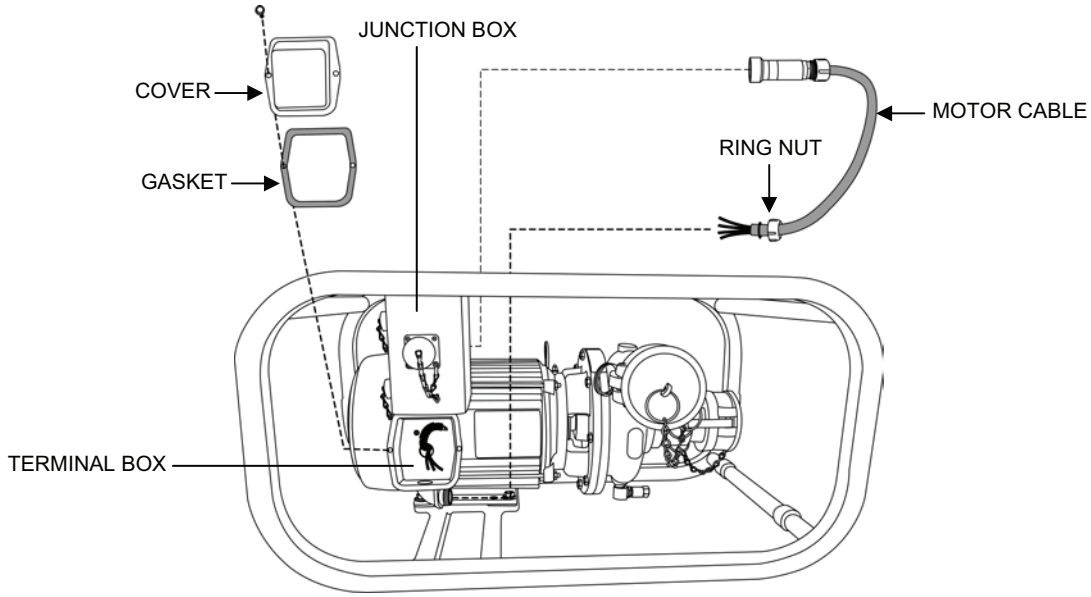

Figure 3. MF Feed Pump Electric Motor Cable Replacement.

7. Insert the wire end of the new cable into the terminal box and secure with the ring nut.
8. Connect the motor cable wires to the motor terminal wires in accordance with the tags.
9. Install the terminal box cover gasket and cover and secure with the two nuts.

MF Feed Pump P-3 Pump/Motor Assembly Replacement:

Parts (TM 10-4610-309-23P):
P-3 pump/motor assembly
Materials:
Sealing Compound (WP 0038, Table 1, item 41)
Equipment Condition:
P-3 Pump assembly removed from service and drained

Replace the MF Feed Pump P-3 Pump/Motor Assembly follows (see Figure 2):

1. Disconnect the motor cable at the junction box.
2. Remove the four bolts, flat washers, and lock washers that secure the pump/motor unit to the frame.

WARNING

Two person lift. Two people are required to safely move the pump/motor unit. Lift with your legs, not your back. Failure to observe this warning may result in back injury.

3. Slide the pump/motor unit out the side of the frame.
4. Position the new pump/motor unit onto the frame and secure it using the four bolts, flat washers, and lock washers.
5. Connect the motor cable to the proper receptacle on the junction box.
6. Remove the coupler and dust cap from the outlet connection of the old pump and install them on the new pump. Use sealing compound on the coupler threads (WP 0038, Table 1, item 41).
7. Remove the coupler and dust plug from the inlet connection of the old pump and install them on the new pump. Use sealing compound on the coupler threads (WP 0038, Table 1, item 41).
8. Remove the drain valve from the old pump. Remove the drain plug from the new pump and install the drain valve on the new pump. Use sealing compound on the valve threads (WP 0038, Table 1, item 41).
9. Place the pump back into service and inspect it for leaks and proper operation.

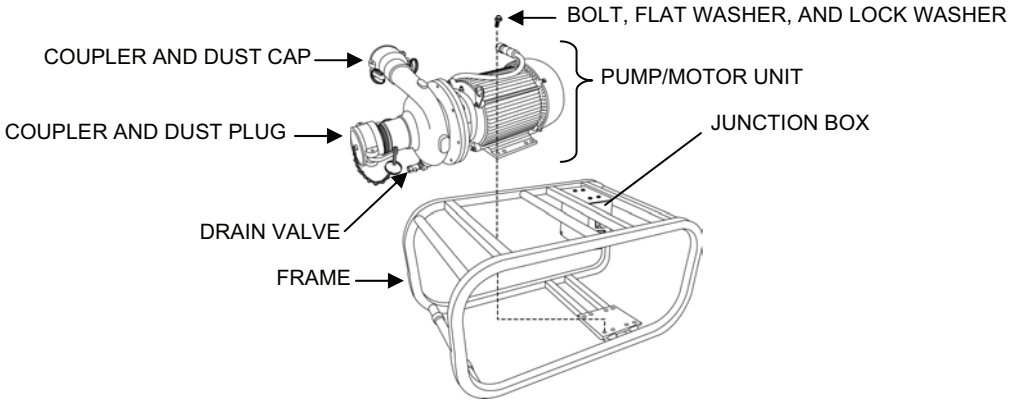

Figure 4. MF Feed Pump P-3 Pump/Motor Assembly Replacement.

MF Feed Pump P-3 Electric Motor Replacement:

Parts (TM 10-4610-309-23P):
- P-3 Electric Motor Assembly
- Seal Kit
- Shaft Sleeve
- Wear Ring

Materials:
- Corrosion preventive compound (BII) (WP 0038, Table 1, item 19)
- Glycerin (BII) (WP 0038, Table 1, item 24)
- Sealing compound (WP 0038, Table 1, item 40)
- Clean, dry rags (WP 0038, Table 1, item 39)

Equipment Condition:
- MF Feed Pump Assembly P-3 removed from service

Replace the MF Feed Pump P-3 electric motor as follows:

1. Disconnect the electric motor cable at the P-3 skid junction box.
2. Remove the MF Feed Pump P-3 as follows (see Figure 5).

WARNING

Two-person lift. Two people are required to move the pump. Lift with your legs, not your back. Failure to observe this warning can result in back injury.

a. Open the pump drain and drain the pump casing. Then close the drain.
b. Remove the eight cap screws that hold the pump casing to the adapter and pull the casing off.
c. Remove and discard the pump casing gasket.
d. Remove the impeller screw. It may be necessary to hold the impeller using a strap wrench or a pipe wrench to keep the impeller from turning while loosening the screw with a socket wrench.
e. Remove and discard the screw gasket.
f. Ease the impeller off the shaft. If required, carefully pry the impeller off of the shaft.
g. Remove the spring and the impeller key.
h. Pull the shaft sleeve with the rotating parts of the mechanical seal off the shaft.
i. Lift the pump cover off the adapter. If required, carefully pry the cover off the adapter.

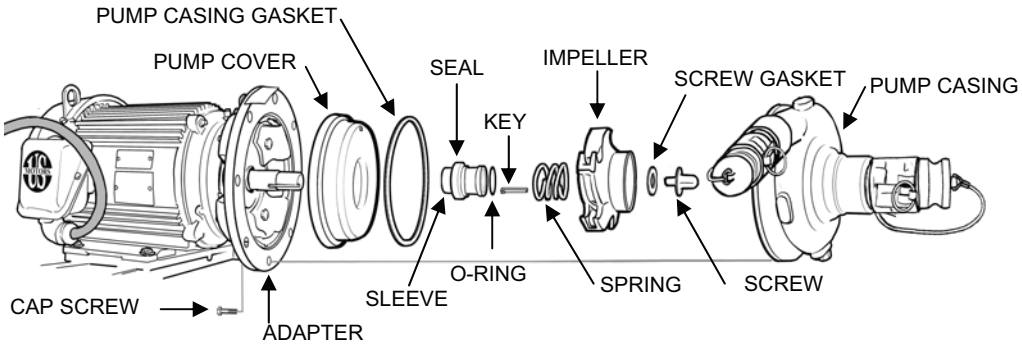

Figure 5. MF Feed Pump Removal.

3. Remove the four cap screws that hold the adapter to the motor (see Figure 6). Remove and retain the adapter.

WARNING

Two-person lift. Two people are required to safely move the motor. Lift with your legs, not your back. Failure to observe this warning can result in back injury.

4. Remove the four bolts and washers that hold the motor to its base and remove the motor (see Figure 6).

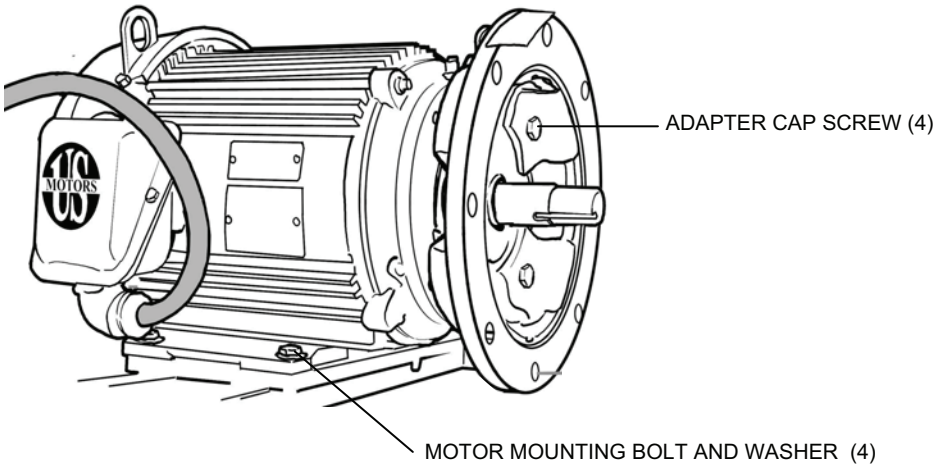

Figure 6. MF Feed Pump Motor Removal.

5. Secure the replacement motor to the motor base using the four bolts and washers.
6. Secure the adapter to the replacement motor using the four cap screws.
7. Inspect the MF Feed Pump components, replace parts as needed, and install the pump onto the adapter. Refer to **MF Feed Pump P-3 Repair** in this work package.

Solenoid Valve Manifold Assembly Replacement:

Parts:
Solenoid Valve Manifold Assembly (TM 10-4610-309-23P)
Equipment Condition:
Army TWPS: Generator off and TWPS main breaker off
Marine Corps TWPS: TWPS disconnected from power source

Replace the solenoid valve manifold assembly as follows:

WARNING

The air system must be bled prior to working on components of the air system. Failure to observe this warning can result in injury to personnel and damage to equipment.

1. Bleed the entire air system as follows (see Figure 7)

   a. Turn off the air compressor by switching the Air Compressor control at the OCP from AUTO to OFF.
   b. If you don't want to bleed air out of the air receiver tank, close Air Receiver Tank Shut-Off Valve V-907.
   c. Make sure that Low Pressure Air Shut-Off Valve V-909 is open.
   d. Slowly open Low Pressure Air Vent Valve V-910 to bleed the air system.

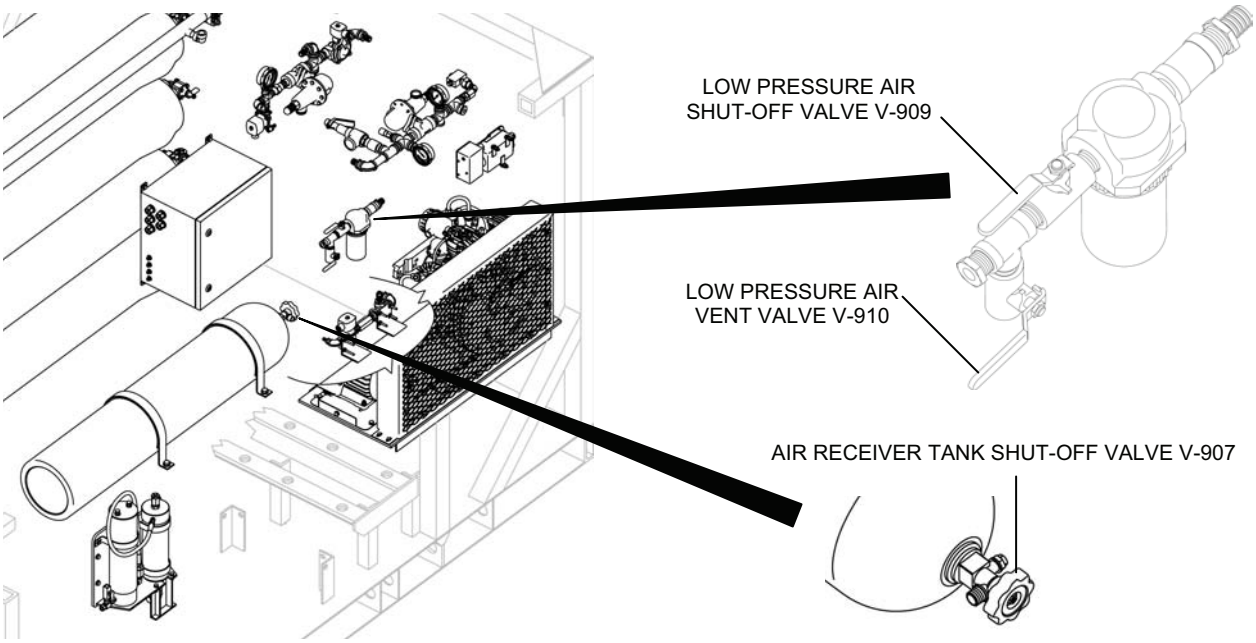

Figure 7. Valves for Bleeding the Air System.

2. Remove solenoid valve manifold assembly as follows (see Figure 8):
    a. Open the instrument/solenoid panel box to the solenoid valve manifold assembly.
    b. Tag and disconnect the 8 tubes that are connected to the top and left side of the solenoid valve manifold assembly.
    c. Tag and disconnect the 6 pairs of solenoid coil wires from the terminal strip.
    d. Remove the two mounting screws, lock washers, and flat washers that secure the solenoid valve manifold assembly to the box (one screw, lock washer, and flat washer at the top of the manifold and one at the bottom).
    e. Remove the solenoid valve manifold assembly.

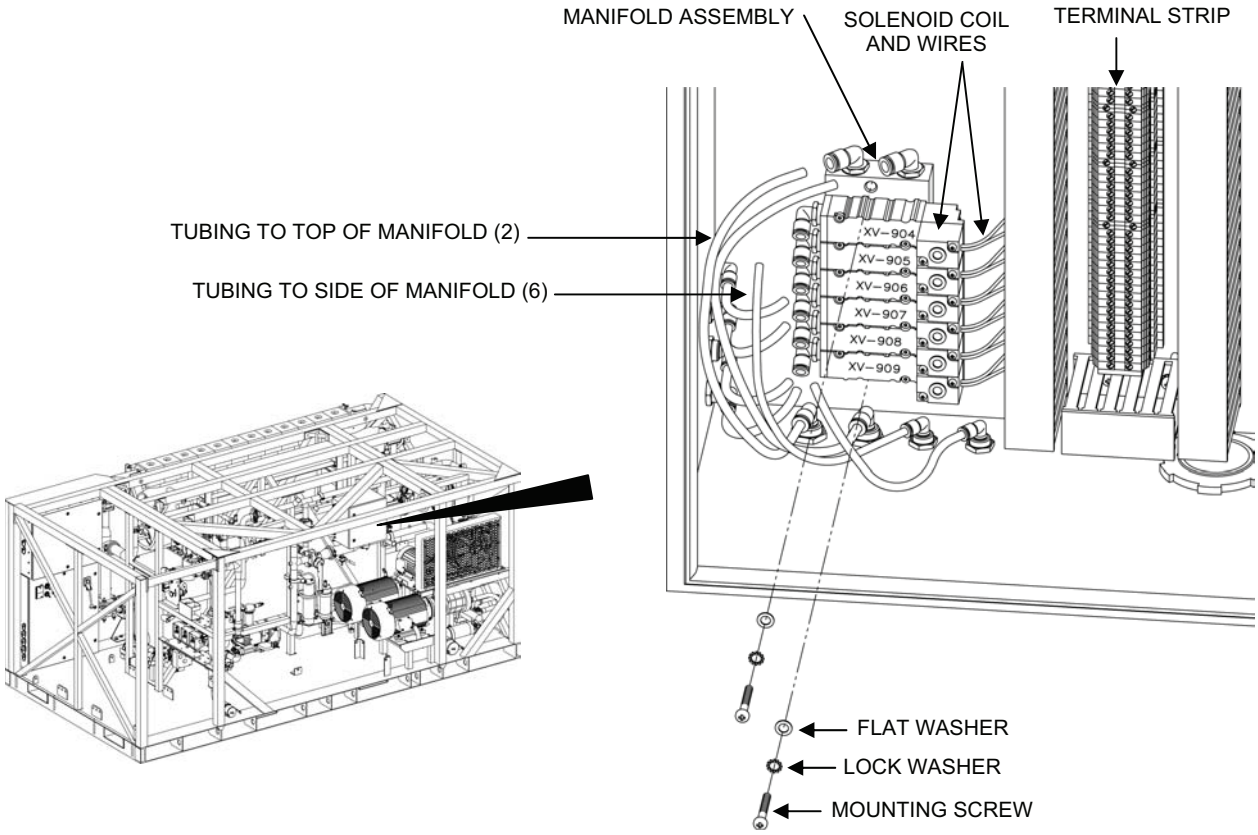

Figure 8. Solenoid Valve Manifold Assembly Removal.

3. Install a new solenoid valve manifold assembly as follows:
    a. Position the new solenoid valve manifold assembly in the instrument/solenoid panel box and secure using the two mounting screws, lock washers, and flat washers.
    b. Connect the 8 tubes to the top and left side of the new manifold according to the connection tags (see Figure 9).
    c. Match the tags on the wires of the solenoid coils that were removed to the wires on the new solenoid coils.
    d. Connect the wires of the new solenoid coils to the terminal strip according to the tags.
    e. Remove all tags.
    f. Close the instrument/solenoid panel box.

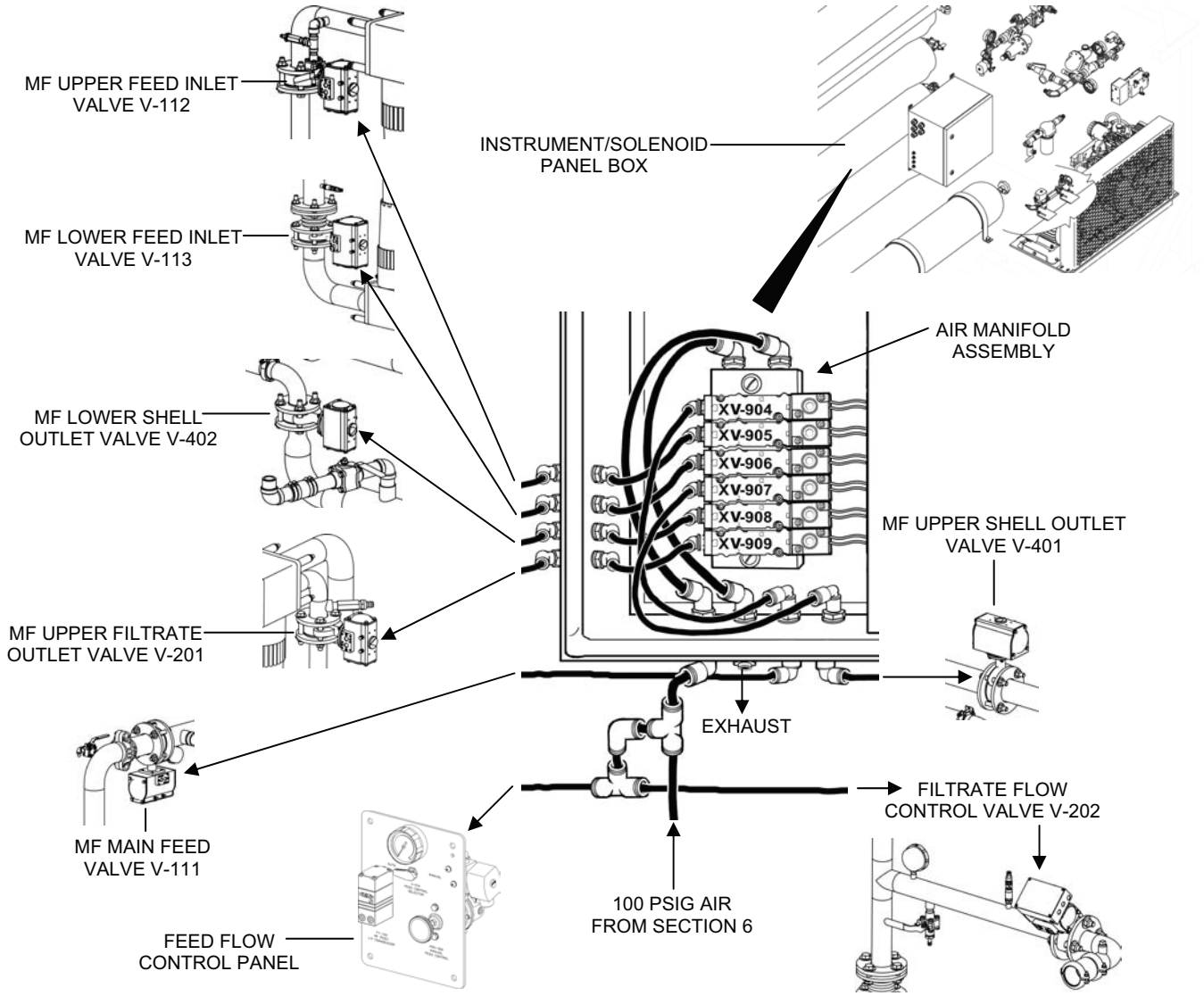

Figure 9. Air Manifold Assembly Air Tube Connection Arrangement.

Solenoid Coil Replacement:

Parts:
Solenoid Coil (TM 10-4610-309-23P)
Equipment Condition:
Army TWPS: Generator off and TWPS main breaker off
Marine Corps TWPS: TWPS disconnected from power source

Replace a solenoid coil in the instrument/solenoid panel box as follows:

WARNING

The air system must be bled prior to working on components of the air system. Failure to observe this warning can result in injury to personnel and damage to equipment.

1. Bleed the air system. Refer to **REPLACE** and **Solenoid Valve Manifold Assembly**.
2. Remove a solenoid coil as follows (see Figure 10):
   a. Open the instrument/solenoid panel box cover.
   b. Loosen the two screws that secure the instrument panel and open the instrument panel to access the solenoid valve manifold assembly.
   c. Locate the solenoid coil to be replaced.
   d. Tag the wire connections from the solenoid coil at the terminal strip.
   e. Remove the two screws securing the solenoid coil to the valve.
   f. Carefully pull the solenoid coil from the valve.

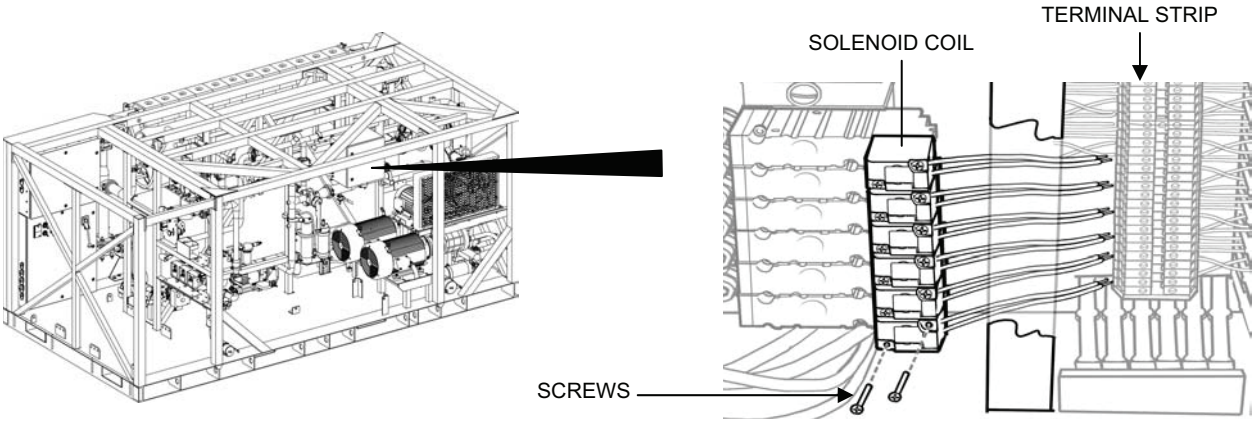

Figure 10. Solenoid Coil Replacement.

3. Install new solenoid coil.
   a. Position the new solenoid coil on the valve.
   b. Secure the solenoid coil to the valve using the two mounting screws.
   c. Connect the wires from the solenoid coil to the terminal strip.
   d. Remove wire tags.
   e. Close the instrument/solenoid panel box.

Solenoid Valve Replacement:

Parts:
Solenoid Valve (TM 10-4610-309-23P)
Equipment Condition:
Army TWPS: Generator off and TWPS main breaker off
Marine Corps TWPS: TWPS disconnected from power source

Replace a solenoid valve in the instrument/solenoid panel box as follows:

WARNING

The air system must be bled prior to working on components of the air system. Failure to observe this warning can result in injury to personnel and damage to equipment.

1. Bleed the air system. Refer to **REPLACE** and **Solenoid Valve Manifold Assembly**.
2. Remove a solenoid valve as follows (see Figure 11):
   a. Open the instrument/solenoid panel box cover.
   b. Loosen the two screws that secure the instrument panel and open the instrument panel to access the solenoid valve manifold assembly.
   c. Locate the solenoid valve to be replaced.
   d. Remove the two screws securing the solenoid coil to the valve that is to be replaced.
   e. Carefully pull the solenoid coil from the valve.
   f. Remove the two screws securing the solenoid valve to the manifold and remove the valve.

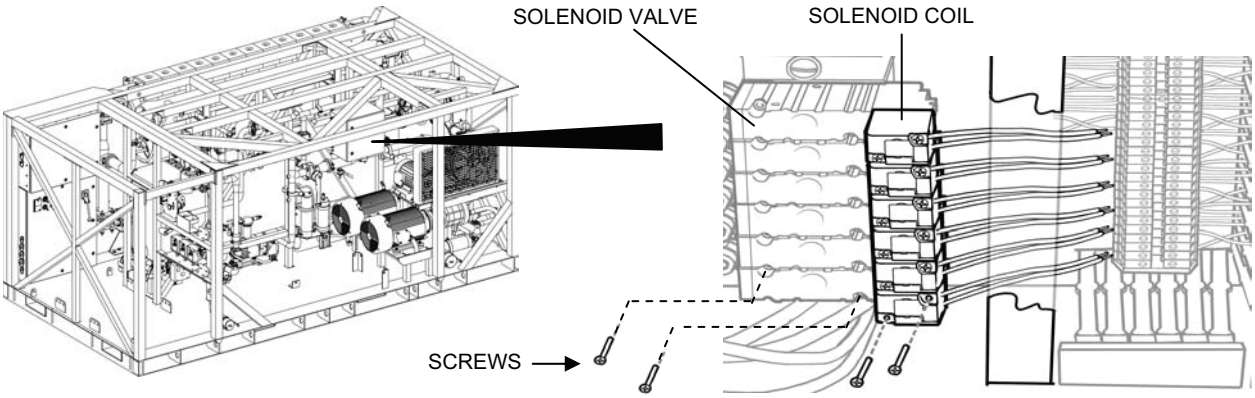

Figure 11. Solenoid Valve Replacement.

4. Install new solenoid valve.
   a. Secure the new solenoid valve to the manifold using the two mounting screws.
   b. Secure the solenoid coil to the valve using the two mounting screws.
   c. Close the instrument/solenoid panel box.

Waste Outlet Hoses and Adaptor A-09 Replacement:

Parts (TM 10-4610-309-23P):
- 4-in. x 5-ft. waste outlet suction hose
- 4-in. suction hose gasket
- Adaptor A-09
- Gasket, 4-in. adaptor
- Gasket, 6-in. adaptor
- 6-in. x 50-ft. waste outlet discharge hose

Equipment Condition:
- TWPS in Standby Shutdown Without Draining Down
- Army TWPS: TWPS main breaker off
- Marine Corps TWPS: TWPS disconnected from power source

Inspect and replace the waste outlet hoses, Adaptor A-09, and hose and adaptor gaskets as follows (see Figure 12):

WARNING

High velocity discharge hazard. The blow back step of the automatic MF backwash operation results in a sudden and very high velocity surge in the waste outlet hoses. The TWPS must be in Shutdown and the TQG and TWPS main breaker must be off (Army) or the TWPS disconnected from its power source (Marine Corps) prior to removing or installing reject hose or adaptor A-09. Failure to observe this warning can result in injury.

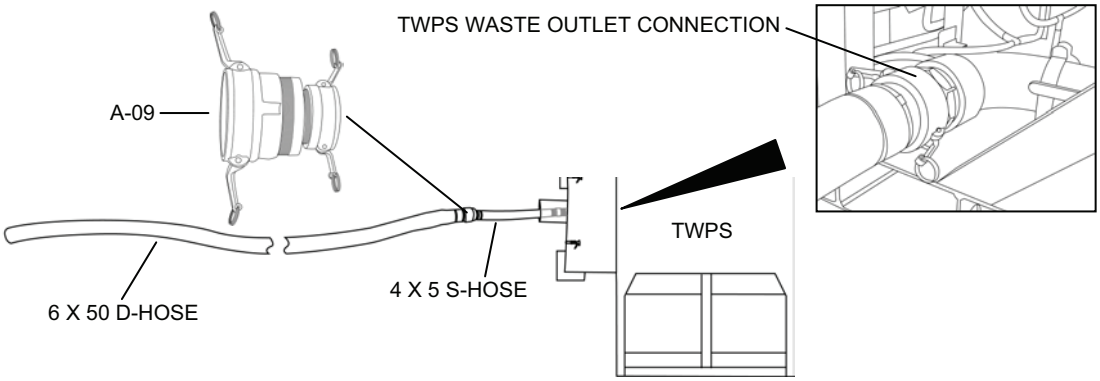

Figure 12. Waste Outlet Hoses and Adaptor A-09.

1. Inspect the 4-in. by 5-ft. waste outlet suction hose for leaks, cracks or other damage.
2. Replace the entire hose assembly if damage is found.
3. Inspect adaptor A-09 for leaks, cracks, or other damage.
4. Replace adaptor A-09 if damage is found.
5. Inspect the 6-in. by 50-ft. waste outlet discharge hose for leaks, cracks or other damage.
6. Replace the entire hose assembly if damage is found.
7. Check the female ends of the 4 x 5 hose and adaptor A-09 for missing or damaged gaskets.
8. If a gasket is missing or damaged, install a new gasket in the female end of the hose or adaptor.

REPAIR

MF Feed Tank T-1 Repair:

Parts:
Collapsible MF feed tank (TM 10-4610-309-23P)
Material:
Army TM 10-5430-237-12&P for collapsible product water distribution tank repair
Or Marine Corps TM 01034E-12&P/1 for collapsible product water distribution tank repair

Inspect the tank for leaks, surface damage, and damaged hose connectors. Repair surface damage and minor leaks. Refer to **Collapsible Fabric Tank Repair** in WP 0027, General Maintenance.

MF Feed Pump P-3 Repair:

Parts (TM 10-4610-309-23P):
Seal Kit
Shaft Sleeve
Wear Ring
Materials:
Solvent (WP 0038, Table 1, item 21)
Glycerin (BII) (WP 0038, Table 1, item 24)
Clean, dry rags (WP 0038, Table 1, item 39)
Sealing compound (WP 0038, Table 1, item 40)
Equipment Condition:
MF Feed Pump Assembly P-3 removed from service.

Repair MF Feed Pump P-3 (including inspecting and replacing the pump seal, shaft sleeve, and wear ring) as follows:

1. Remove the MF Feed Pump P-3 from the adapter as follows (see Figure 13).

WARNING

Two-person lift. Two people are required to move the pump. Lift with your legs, not your back. Failure to observe this warning can result in back injury.

a. Open the pump drain and drain the pump casing. Then close the drain.
b. Remove the eight cap screws that hold the pump casing to the adapter and pull the casing off.
c. Remove and discard the pump casing gasket.
d. Remove the impeller screw. It may be necessary to hold the impeller using a strap wrench or a pipe wrench to keep the impeller from turning while loosening the screw with a socket wrench.
e. Remove and discard the screw gasket.
f. Ease the impeller off the shaft. If required, carefully pry the impeller off of the shaft.
g. Remove the spring and the impeller key.
h. Pull the shaft sleeve with the seal off the shaft.
i. Lift the pump cover off the adapter. If required, carefully pry the cover off the adapter.

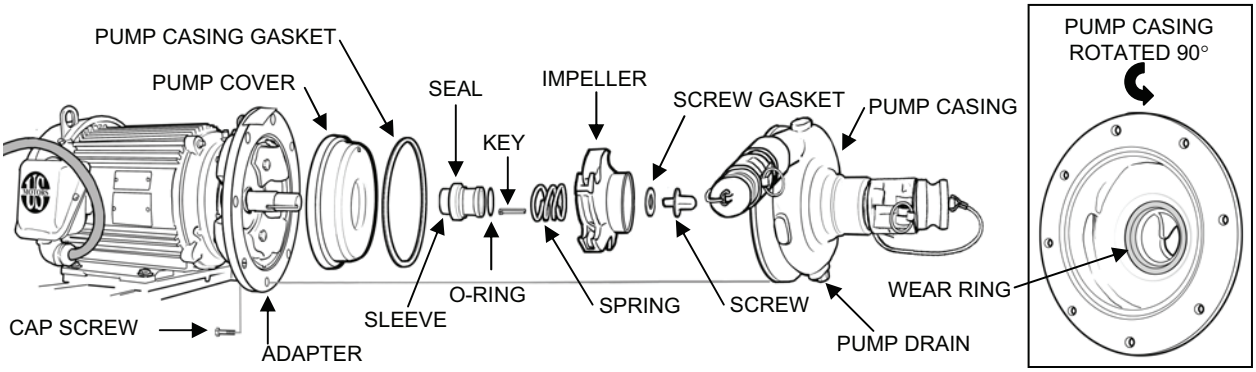

Figure 13. MF Feed Pump Removal.

2. Inspect the following parts for wear or damage:
   a. Seal on the shaft sleeve (do not remove the seal parts if not replacing).
   b. Stationary seat and stationary seat gasket in the pump cover (do not remove the stationary seat and seat gasket from the pump cover if not replacing them).
   c. Shaft sleeve.
   d. Wear ring.
3. If the seal kit (seal, stationary seat, seat gasket, and spring) and shaft sleeve need to be replaced, remove them as follows (see Figure 14):

NOTE

If the seal sticks tightly to the sleeve, it may be necessary to bathe it in oil to loosen the adhesive, or you may have to cut the seal away with a knife.

   a. Twist and slide the seal off the sleeve.
   b. Pry the stationary seat and seat gasket out of the bore of the pump cover.

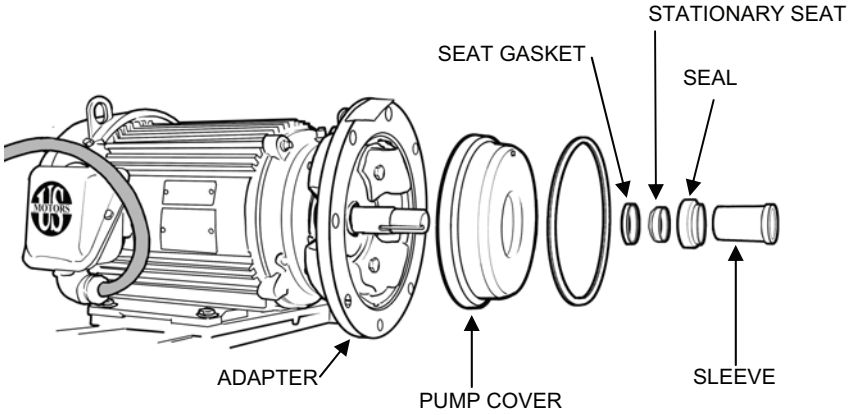

Figure 14. Seal Kit Component Removal.

4. Install a new seal kit (seal, stationary seat, seat gasket, and spring) and shaft sleeve as follows (see Figure 15):
   a. Clean the sleeve, pump cover bore, and pump shaft thoroughly with solvent, and dry with a clean cloth.

NOTE

Do not use grease to lubricate the sleeve and seal parts. Grease will prevent the seal from setting and result in leakage around the shaft.

Once the seal is placed onto the sleeve the rest of the assembly must be completed without delay to ensure that the seal sets properly.

   b. Lightly lubricate the bore of the pump cover with glycerin.

NOTE

If necessary, the seat can be tapped lightly with the handle end of a screwdriver or similar tool. Do not force the seat so that it gets damaged.

   c. Press the stationary seat gasket and then the stationary seat into the bore so that they are seated firmly and squarely.
   d. Lightly lubricate the new seal with glycerin and slide it onto the new sleeve with the carbon side facing the small end of the sleeve. Complete the rest of the assembly without delay.
   e. Slide the pump cover with the stationary seat over the shaft. Avoid bumping the seat as you slide it over the shaft.
   f. Position the pump cover so that the internal bypass hole in the cover is between the 1 and 2 o'clock position for top discharge.
   g. Tap the cover with a rubber mallet if necessary to seat the cover securely.
   h. Insert the new sleeve O-ring into the inner diameter of the sleeve if not already in place.
   i. Lubricate the inner diameter of the sleeve and the outer diameter of the shaft with glycerin.
   j. Slide the sleeve with the seal onto the shaft with the small end of the sleeve going onto the shaft first. Push the sleeve all the way onto the shaft.
   k. Align the shaft and sleeve keyways.
   l. Position the key with the thick end of the key toward the motor and the flat back of the key against the motor shaft.
   m. Insert the key in the keyway.
   n. Discard the seal spring retainer and place the new spring over the end of the sleeve and over the seal assembly.
   o. Slide the impeller onto the shaft over the key.
   p. Place sealing compound on the impeller screw threads (WP 0038, Table 1, item 40).
   q. Place the impeller screw gasket onto the impeller.
   r. Push down on the impeller and thread the impeller screw into the end of the shaft.
   s. Tighten the impeller screw.
   t. Check the freedom of the rotating parts by hand-rotating the impeller. If the impeller rubs against the pump cover, try tapping the cover down again with the rubber mallet to seat the cover on the adapter.

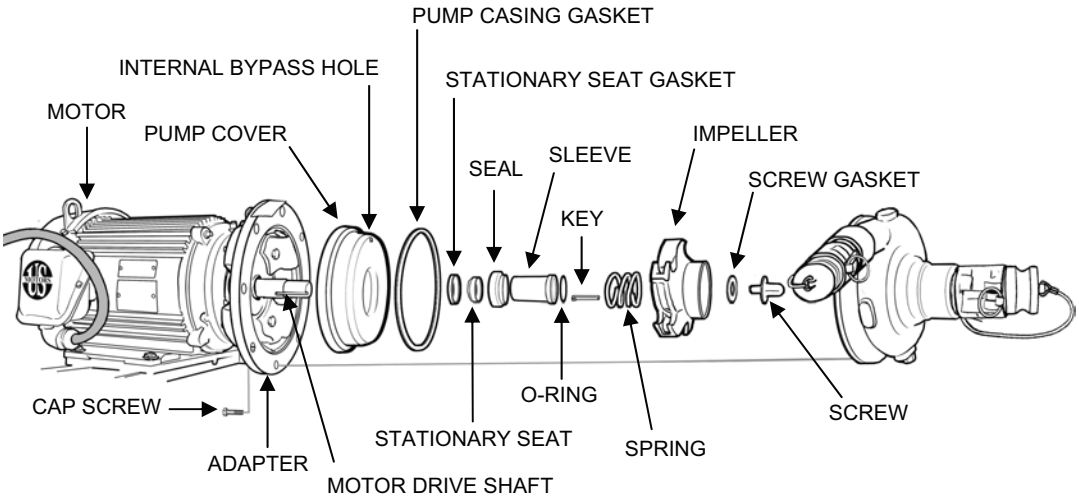

Figure 15. Seal Kit and Shaft Sleeve Installation.

5. If the wear ring is damaged, replace it as follows:
   a. Drill a hole through the wear ring in two places opposite each other. Be careful not to damage the pump casing (see Figure 16).
   b. Crack the remaining ring wall and remove the wear ring.
   c. Make sure the surfaces of the new wear ring and the pump casing where the ring is to be installed are free of burrs. Remove any burrs with a fine emery cloth.
   d. Press the new wear ring into place.
   e. Evenly drive the ring into place.

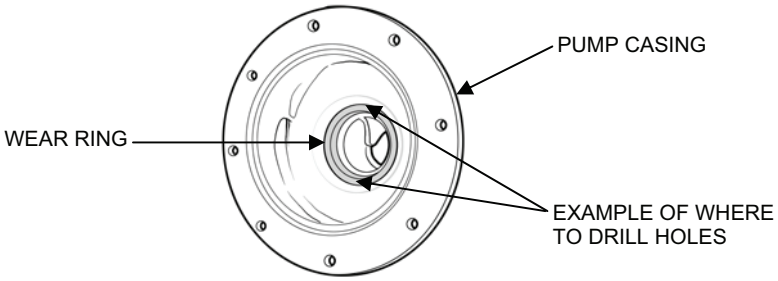

Figure 16. Wear Ring Removal.

6. Reinstall the pump casing as follows (see Figure 15):
   a. Install a new casing gasket on the shoulder of the pump cover.
   b. Position the pump casing so that the pump discharge points toward you when the motor is on your left and the pump is on your right.
   c. Place the new pump casing onto the pump cover, apply sealing compound (WP 0038, Table 1, item 40) to the eight cap screws and secure the pump casing with the screws.
   d. Tighten the cap screws uniformly.
7. Reconnect the electric motor cable to the P-3 skid junction box.
8. Place the MF Feed Pump back into service and inspect it for leak.

END OF WORKPACKAGE

TACTICAL WATER PURIFICATION SYSTEM (TWPS) FIELD MAINTENANCE PROCEDURES REVERSE OSMOSIS SYSTEM

0013 00

THIS SECTION COVERS:
Replace, Repair, Service

INITIAL SETUP:

Maintenance Level
Field
Tools
Army: General Mechanic's Tool Kit (WP 0037)
Marine Corps: Common No. 1 Tool Set (WP 0037)
Torque wrench (minimum 0-250 in.-lbs)
Drill and drill bits
References:
Refer to TM 10-4610-309-23P for repair parts information
Personnel Required
One or two as required
Equipment Condition
TWPS in Standby Shutdown Without Draining Down
Army: Generator off and TWPS main breaker off
Marine Corps: TWPS disconnected from power source

GENERAL:

This work package contains information and instructions for replacing, repairing, and servicing components in the Reverse Osmosis (RO) System. The procedures in this work package include:

- RO Feed Tank Strainer S-3 Replacement
- RO Feed Tank Heaters H-1 and H-2 Replacement
- RO Feed Pump P-4 Pump/ Motor Assembly Replacement
- RO Feed Pump P-4 Drain Valve V-211 Replacement
- RO Feed Pump P-4 Electric Motor Replacement
- Inline RO Strainer S-4 Replacement
- HP Pump Relief Valve RV-301 and RO Feed Relief Valve RV-302 Replacement
- RO Product Flow Three-Way Valves V-501 through V-510 Replacement
- Product Relief Valve RV-501 Replacement
- Product Vacuum Breaker VB-501 Replacement
- Product Check Valve V-512 Replacement
- Main and Auxiliary Pressure Control Valves HCV-401 and HCV-401A Replacement
- Pressure Recovery Turbocharger PRT-1 Replacement
- Turbocharger Feed Drain Valve V-303 and Reject Drain Valve V-410 Replacement
- Reject Backflow Check Valve V-411 Replacement
- Waste Out Hose and Adaptor A-09 Replacement
- Waste Out Rupture Disk RD-401 Repair
- RO Feed Tank Cover Hinge Repair
- RO Feed Pump P-4 Repair
- Pressure Recovery Turbocharger PRT-1 Repair

Refer to WP 0014 for maintenance procedures for RO System High Pressure Pumps P-5 and P-6.

Refer to WP 0023 for maintenance procedures for the following RO System control instruments:
- RO feed tank level transmitter LT-201
- RO feed tank temperature indicator TI-202
- RO feed temperature transmitter TT-201
- RO feed pressure transmitter PT-201
- RO feed pressure indicator PI-202
- HP pump lubricant re-circulation flow indicators FI-202 and FI-203
- HP pump discharge pressure indicator PI-301
- RO feed pressure transmitter PT-302
- RO feed pressure indicator PI-304
- Product output pressure indicator PI-501
- Conductivity elements CE-501A and CE-501B
- Conductivity indicating transmitter CIT-501
- Product flow element FE-501
- Product flow transmitter FT-501
- Reject pressure indicator PI-401
- RO reject flow element FE-401
- RO reject flow transmitter FT-401

Refer to WP 0027 for maintenance procedures for the following Reverse Osmosis System valves and piping connectors:
- RO Feed Tank Auxiliary Drain Ball Valve V-210
- HP Pump Inlet Butterfly Valve V-212
- HP Pump Inlet Drain Ball Valve V-213
- HP Pump Case Drain Ball Valve V-214
- HP Pump Outlet Drain Ball Valve V-302
- Feed Piping Drain Ball Valve V-304
- RO Feed Tank Drain to Waste Ball Valve V-412
- Product Utility Ball Valve V-511
- Pipe Couplings
- Sanitary Clamps
- Grooved Couplings

REPLACE

RO FEED TANK PUMP INLET STRAINER S-3 REPLACEMENT:

Parts (TM 10-4610-309-23P):
Pump Inlet Strainer S-3
RO Feed Tank Cover Gasket
Equipment Condition:
TWPS in Standby Shutdown Without Draining Down

Replace RO Feed Tank Pump Inlet Strainer S-3 as follows (see Figure 1):

CAUTION

Do not allow the screws or washers to fall into the RO feed tank. Pump inlet strainer S-3 will not prevent this mounting hardware from entering the pump. Failure to observe this caution can result in severe damage to and the failure of the RO feed pump if the hardware is sucked into the pump.

1. Remove the six screws and flat washers from the middle feed tank hatch cover.
2. Lift off the hatch cover.
3. Inspect the hatch cover gasket for damage or deterioration and replace if needed.
4. Lift the strainer out of the RO feed tank.
5. Unclip the chain from the strainer and clip it to the new strainer.
6. Lower and position the new strainer over the strainer guide at the bottom of the tank.
7. Place the hatch cover gasket and hatch cover on the RO feed tank.
8. Secure the hatch cover to the tank using the six screws and flat washers.

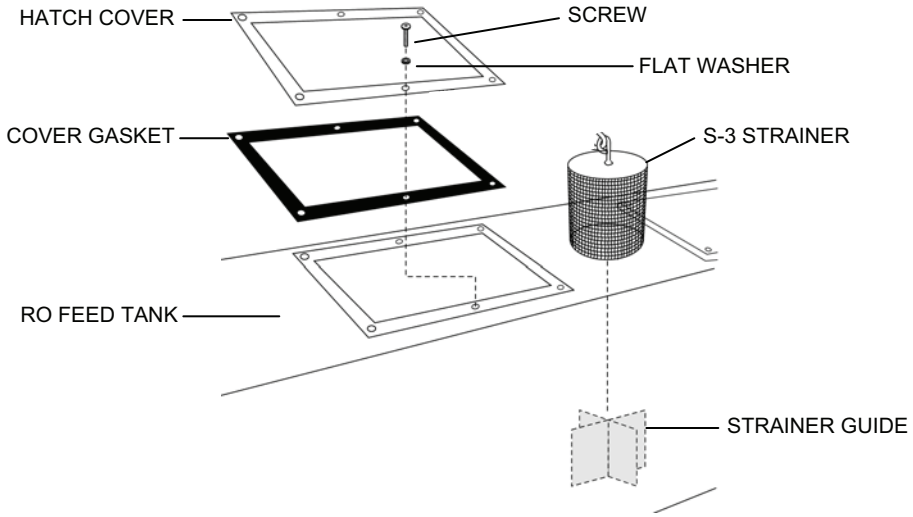

Figure 1. RO Feed Tank Pump Inlet Strainer S-3 Replacement.

RO Feed Tank Heaters H-1 and H-2 Replacement:

Parts (TM 10-4610-309-23P):
Heater Element
Materials:
Tape, Antiseizing (BII) (WP 0038, Table 1, item 49, 50)
Sealing Compound (WP 0038, Table 1, item 40)
Equipment Condition:
TWPS in Standby Shutdown With Drain-Down
Army: Generator off and TWPS main breaker off
Marine Corps: TWPS disconnected from power source
Replace either of the RO Feed Tank Heaters H-1 or H-2 as follows:

WARNING

The TWPS must be in Shutdown and the TQG and TWPS main breaker must be off (Army) or the TWPS disconnected from its power source (Marine Corps) prior to removing or installing an RO Feed Tank Heater. Failure to observe this warning can result in injury or death from electrocution or damage to equipment.

1. Remove an RO feed tank heater from the tank as follows (see Figure 2):
   a. Make sure the TWPS is in Standby Shutdown With Drain-Down.
   b. Remove the four screws from the heater cap on the heater terminal box and remove the cap.
   c. Tag and disconnect the three phase wires and the one ground wire from the heater terminals.
   d. Unscrew the lock nut inside the terminal box from the 45-degree box connector.
   e. Pull the connector and conduit as an assembly out of the terminal box. Retain the packing/retainer.
   f. Unscrew the heater from the tank heater coupling.
   g. Pull the heater element out the tank.

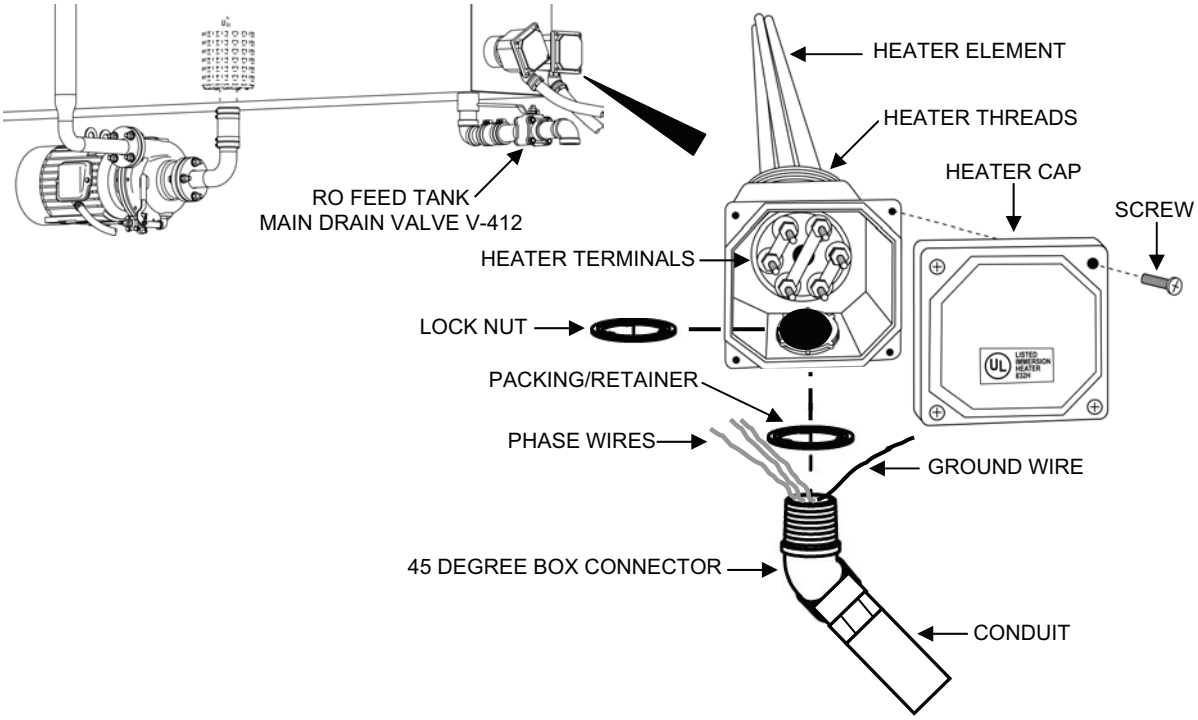

Figure 2. RO Feed Tank Heater Replacement.

2. Install an RO feed tank heater as follows:
    a. Apply sealing compound to the heater threads.
    b. Insert the new heater element into the tank and thread it all the way into the tank heater coupling.
    c. Make sure the packing/retainer is over the threads of the 45 degree box connector.
    d. Insert the 45-degree box connector, with the conduit attached, through the hole in the bottom of the terminal box.
    e. Thread the lock nut onto the box connector inside the terminal box and tighten to secure the connector to the box.
    f. Connect the heater cable wires to the heater terminals in accordance with the wire tags.
    g. Secure the heater cap onto the heater using the four screws.

RO Feed Pump P-4 Pump/Motor Assembly Replacement:

Parts (TM 10-4610-309-23P):
RO Feed Pump P-4 pump/motor assembly
Gasket, inlet flange
Gasket, outlet flange
Materials:
Clean, dry rags (WP 0038, Table 1, item 39)
Equipment Condition:
TWPS in Standby Shutdown With Drain-Down
Army: Generator off and TWPS main breaker off
Marine Corps: TWPS disconnected from power source

Replace RO Feed Pump P-4 Pump/Motor Assembly as follows:

WARNING

The TWPS must be in Shutdown and the TQG and TWPS main breaker must be off (Army) or the TWPS disconnected from its power source (Marine Corps) prior to removing or installing the RO feed pump. Failure to observe this warning can result in injury or death from electrocution or damage to equipment.

1. Remove the RO Feed Pump P-4 Assembly from the TWPS skid as follows (see Figure 3):
    a. Make sure the TWPS is in Standby Shutdown With Drain-Down.
    b. Remove the terminal box cover from the pump motor (2 cap screws).
    c. Tag and disconnect the pump power cable wires and the motor wires (7 wires).
    d. Remove the power cable lock nut from the box connector.
    e. Pull the box connector and power cable as an assembly out of the terminal box.
    f. Open RO Feed Pump Drain Valve V-211. Once drained, remove the P-4 drain tubing.
    g. Remove the four cap screws, eight flat washers, and four lock nuts that connect the pump inlet flange to the RO feed tank discharge pipe flange. Push the pipe back and remove the gasket. Inspect the gasket and replace if necessary.
    h. Remove the four cap screws, eight flat washers, and four lock nuts that connect the pump outlet flange to the RO feed pump discharge pipe flange.
    i. Remove the four cap screws, four lock washers, and four flat washers that connect the pump assembly base plate to the TWPS skid. Move the pump slightly and remove the outlet flange gasket. Inspect the gasket and replace if necessary.

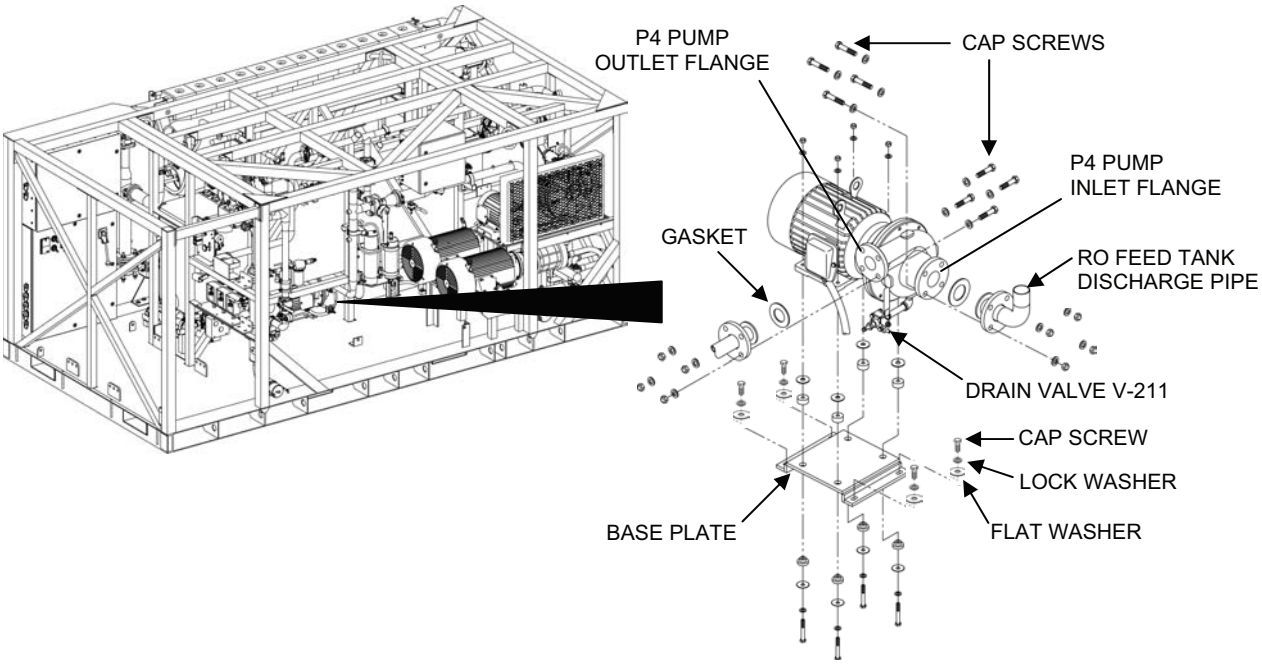

Figure 3. RO Feed Pump P4 Assembly Removal.

WARNING

Two person lift. Two people are required to move the pump assembly. Slide the pump toward the front of the skid. If it is necessary to move the assembly to another location to work on it, lift with your legs, not your back. Failure to observe this warning can result in back injury.

j. Slide the pump assembly toward the operator control station. Turn the pump and withdraw it motor-end first from under the tank.

2. Install the new RO Feed Pump P-4 Assembly onto the TWPS skid as follows (see Figure 3):
   a. Strip the junction box wires back.
   b. Slide the pump assembly into the clear space to the left of the pump mounting position under the RO Feed Tank. Slide roughly into place to match the piping flanges.
   c. Align the pump inlet flange with the RO Feed Tank discharge pipe. Insert the gasket. Install the four cap screws and eight flat washers. Loosely install the four lock nuts.
   d. Align the pump sufficiently to loosely install the four base plate cap screws, four lock washers, and four flat washers.
   e. Align the pump outlet flange with the RO Feed Pump discharge pipe. Insert the gasket. Install the four cap screws and eight flat washers. Loosely install the four lock nuts.
   f. Tighten the base plate cap screws.

NOTE
Be sure the gasket is positioned in the center as the cap screws are tightened.

g. Tighten the pump outlet flange nuts and cap screws.
h. Tighten the pump inlet flange nuts and cap screws.
i. Feed the tagged pump power cable wires and box connector through the bottom of the pump terminal box.
j. Screw the lock nut onto the box connector to secure the power cable to the box.
k. Reconnect the tagged pump power cable wires to the tagged motor wires.
l. Secure the terminal box cover gasket and cover to the pump motor terminal box using the two cap screws.

3. Place the pump back into service and inspect it for leaks.

RO Feed Pump P-4 Drain Valve V-211 Replacement:

Parts (TM 10-4610-309-23P):
RO Feed Pump P-4 Drain Valve
Material:
Tape, antiseizing (WP 0038, Table 1, item 49)
Equipment Condition:
TWPS in Standby Shutdown With Drain-Down
Army: Generator off and TWPS main breaker off
Marine Corps: TWPS disconnected from power source

Replace RO Feed Pump P-4 Manual Drain Valve V-211 as follows (see Figure 4).

WARNING

The TWPS must be in Shutdown and the TQG and TWPS main breaker must be off (Army) or the TWPS disconnected from its power source (Marine Corps) prior to removing or installing the RO feed pump. Failure to observe this warning can result in injury or death from electrocution or damage to equipment.

1. Make sure the TWPS is in Standby Shutdown With Drain-Down.
2. Remove the pump/motor assembly from the TWPS skid. Refer to **REPLACE** and **RO Feed Pump P-4 Pump/ Motor Assembly Replacement**.
3. Remove the drain hose from the drain valve.
4. Unscrew the drain valve from the street elbow. Discard the valve.
5. Clean off any tape residue remaining on the threads of the street elbow pipes.
6. Wrap antiseizing tape on the elbow pipe threads and screw the street elbow into the pump casing. Make sure the elbow, drain valve, and hose are facing in the same direction as the pump discharge flange.
7. Attach the drain hose to the valve outlet.
8. Install the RO Feed Pump P-4 Assembly onto the TWPS skid. Refer to **REPLACE** and **RO Feed Pump P-4 Pump/ Motor Assembly Replacement**.

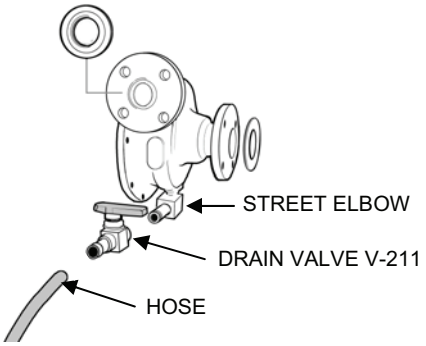

Figure 4. RO Feed Pump P-4 Drain Valve V-211 Replacement.

RO Feed Pump P-4 Electric Motor Replacement:

Parts (TM 10-4610-309-23P):
RO Feed Pump P-4 Electric Motor Assembly
Materials:
Glycerin (BII) (WP 0038, Table 1, item 24)
Solvent (WP 0038, Table 1, item 21)
Clean, dry rags (WP 0038, Table 1, item 39)
Equipment Condition:
TWPS in Standby Shutdown With Drain-Down
Army: Generator off and TWPS main breaker off
Marine Corps: TWPS disconnected from power source

Replace the RO Feed Pump P-4 electric motor as follows:

WARNING

The TWPS must be in Shutdown and the TQG and TWPS main breaker must be off (Army) or the TWPS disconnected from its power source (Marine Corps) prior to removing or installing the RO Feed Pump. Failure to observe this warning can result in injury or death from electrocution or damage to equipment.

1. Make sure the TWPS is in Standby Shutdown With Drain-Down.
2. Remove the pump/motor assembly from the TWPS skid. Refer to **REPLACE** and **RO Feed Pump P-4 Pump/ Motor Assembly Replacement**.
3. Remove the pump from the adapter. Refer to **REPAIR** and **RO Feed Pump P-4 Pump Repair**.
4. Remove the four cap screws that hold the adapter to the motor (see Figure 5).
5. Remove the adapter, slinger and splash plate.

WARNING

Two person lift. Two people are required to safely move the motor. Lift with your legs, not your back. Failure to observe this warning can result in back injury.

6. Remove the four bolts, eight spacers, eight washers, and four nuts that hold the motor to its base and remove the motor.

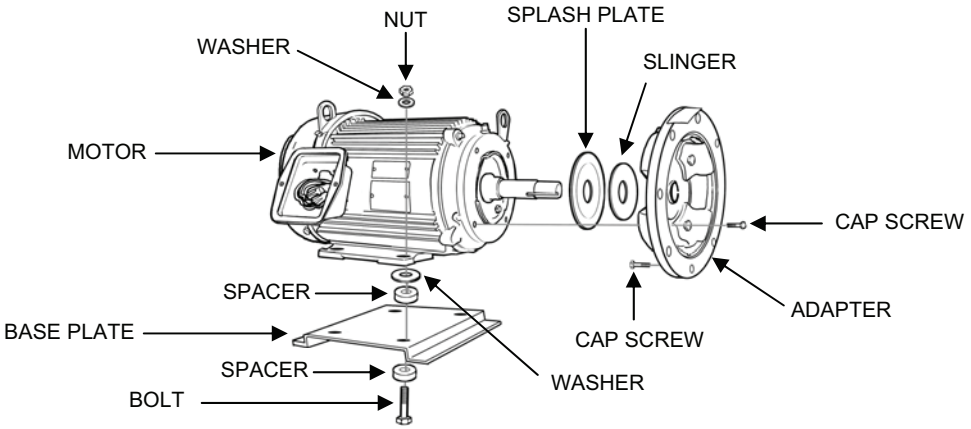

Figure 5. RO Feed Pump P4 Electric Motor Removal.

7. Secure the replacement motor to the motor base using the mounting hardware that was retained when the old pump motor was removed.
8. Install the splash plate and slinger on the motor drive shaft.
9. Attach the adapter to the replacement motor using the four cap screws.
10. Inspect the RO Feed Pump components, replace parts as needed, and install the pump onto the adapter. Refer to **REPAIR** and **RO Feed Pump P-4 Repair** in this work package.
11. Install the RO Feed Pump P-4 Assembly onto the TWPS skid. Refer to **REPLACE** and **RO Feed Pump P-4 Pump/ Motor Assembly Replacement**.
12. Place the RO Feed Pump back into service and inspect it for proper operation and leaks.

Inline RO Strainer S-4 Replacement:

Parts (TM 10-4610-309-23P):
- Inline RO Strainer S-4 Body
- Inline RO Strainer S-4 Mesh
- 4-in. Sanitary Clamp Gasket
- 2-in. Grooved Coupling Gasket

Material:
- Tape, antiseizing (WP 0038, Table 1, item 49)

Equipment Condition:
- TWPS in Standby Shutdown Without Draining Down
- Army: TWPS main breaker off
- Marine Corps: TWPS disconnected from power source

Replace inline RO Strainer S-4 as follows (see Figure 6):

WARNING

The TWPS must be in Shutdown and the TQG and TWPS main breaker must be off (Army) or the TWPS disconnected from its power source (Marine Corps) prior to removing or installing inline RO Strainer S-4. Failure to observe this warning can result in injury or damage to equipment.

1. Remove inline RO Strainer S-4 as follows:
   a. Close valve V-212 at the left of Strainer S-4.
   b. Open drain valve V-213 at the bottom of Strainer S-4.
   c. Remove the 2-in. grooved coupling at the right of Strainer S-4.
   d. Inspect the coupling gasket for damage or deterioration and replace if needed. Push the gasket back over the pipe end.
   e. Support Strainer S-4 and remove the 4-in. sanitary clamp at the left of Strainer S-4. Inspect the clamp gasket for damage and replace if necessary.
   f. Remove the strainer assembly.
   g. Remove and discard the strainer's interior mesh.
   h. Unscrew Drain Valve V-213 and its hose assembly from the strainer body.

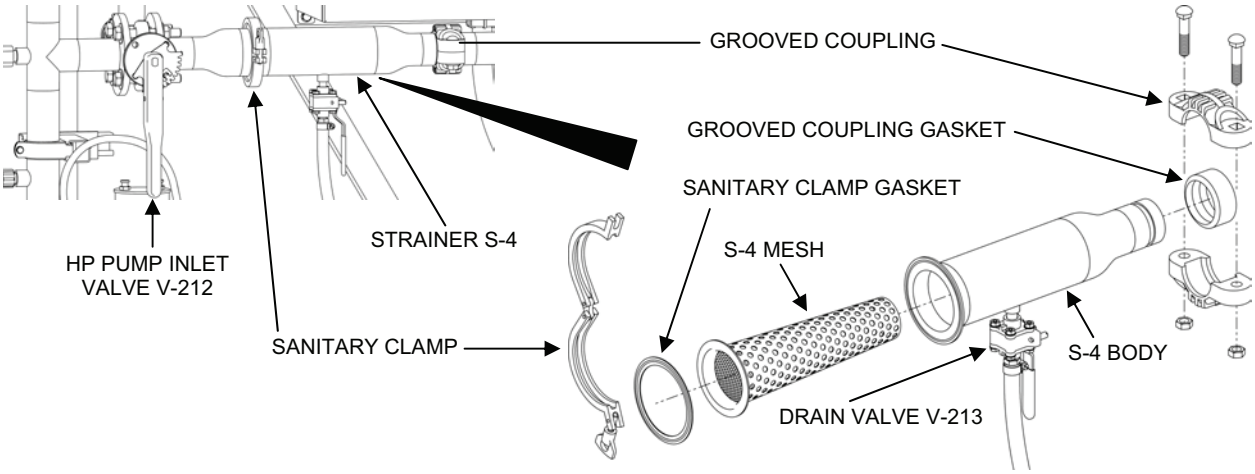

Figure 6. Inline RO Strainer S-4 Replacement.

2. Install Strainer S-4 as follows:
   a. Clean off any tape residue remaining on the threads of the drain valve.
   b. Wrap antiseizing tape on the drain valve pipe threads and screw the drain valve and hose assembly to the strainer drain port.
   c. Position the strainer mesh in the strainer body. Set the sanitary gasket in place on the strainer body flange.
   d. Set the strainer body in place. Be sure that the gasket is properly positioned and the strainer flange is centered.
   e. Install and partially tighten the sanitary clamp.
   f. Push the grooved coupling gasket back into place. Install and partly tighten the coupling.

g. Tighten the sanitary clamp and then the grooved coupling.
h. Make sure Drain Valve V-213 is closed.
i. Open HP Pump Inlet Valve V-212.

HP Pump Relief Valve RV-301 and RO Feed Relief Valve RV-302 Replacement:

Parts (TM 10-4610-309-23P):
HP Pump Relief Valve RV-301
RO Feed Relief Valve RV-302
Material:
Tape, antiseizing (WP 0038, Table 1, item 49)
Equipment Condition:
TWPS in Standby Shutdown With Drain-Down
Army: TWPS main breaker off
Marine Corps: TWPS disconnected from power source

Replace HP Pump Relief Valve RV-301 or RO Feed Relief Valve RV-302 as follows (see Figure 7):

WARNING

The TWPS must be in Shutdown and the TQG and TWPS main breaker must be off (Army) or the TWPS disconnected from its power source (Marine Corps) prior to removing or installing Relief Valve RV-301 or RV-302. Failure to observe this warning can result in injury or damage to equipment.

1. Make sure the TWPS is in Standby Shutdown With Drain-Down.
2. Unthread the nipple, elbow, and the relief valve assembly from its pipe.
3. Remove the nipple and elbow from the relief valve.
4. Clean off any tape residue remaining on the threads of the nipple.
5. Wrap antiseizing tape on the nipple threads and screw the nipple and elbow assembly into the new relief valve.
6. Wrap antiseizing tape on the new valve threads and screw the valve assembly into the pipe.
7. Make sure that the open end of the elbow is positioned as shown in Figure 7.

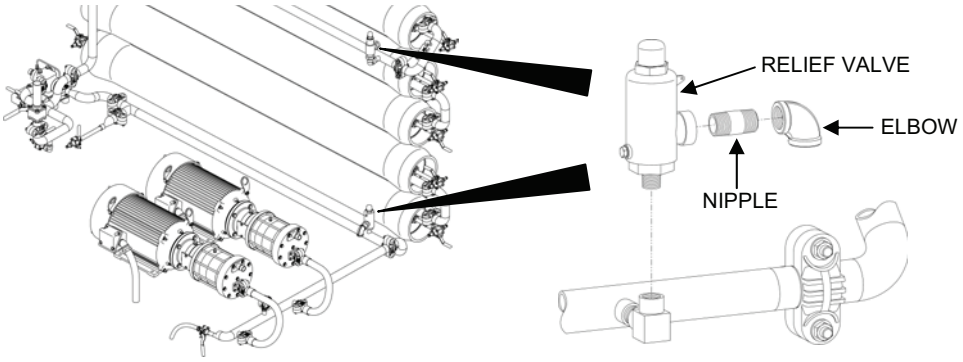

Figure 7. HP Pump Relief Valve RV-301 and RO Feed Relief Valve RV-302 Replacement.

RO Product Flow Three-Way Valves V-501 through V-510 Replacement:

Parts (TM 10-4610-309-23P):
RO Product Flow Three-Way Valve
Hose, ½" ID x ¾" OD, Black Reinforced PVC, Bulk
Material:
Tape, antiseizing (WP 0037, Table 1, item 49)
Equipment Condition:
TWPS in Standby Shutdown With Drain-Down
Army: TWPS main breaker off
Marine Corps: TWPS disconnected from power source

Replace any of the RO Product Flow Three-way Valves V-501 through V-510 as follows (see Figure 8):

WARNING

The TWPS must be in Shutdown and the TQG and TWPS main breaker must be off (Army) or the TWPS disconnected from its power source (Marine Corps) prior to removing or installing any of the RO Product Flow Three-Way Valves V-501 through V-510. Failure to observe this warning can result in injury or damage to equipment.

1. Remove the three-way valve as follows:
   a. Make sure the TWPS is in Standby Shutdown With Drain-Down.
   b. Loosen the hose clamps and remove the hoses from the sample and product outlet ports of the three-way valve. It may be necessary to cut the black product outlet hose to remove it from the hose barb.
   c. Unscrew the valve from the RO vessel product water outlet pipe.
   d. Unscrew the hose barbs from the sample and product outlet ports of the three-way valve.
   e. Discard the valve.

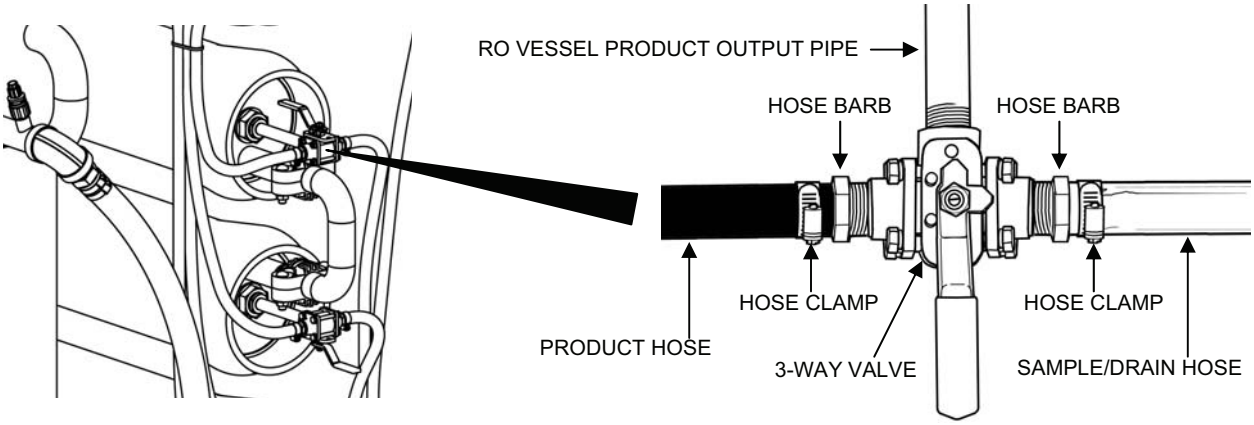

Figure 8. RO Product Three-Way Valve Replacement.

2. Install the new three-way valve as follows:
    a. Clean off any tape residue remaining on the threads of the hose barbs and the RO vessel product water outlet pipe.
    b. Wrap antiseizing tape on the threaded ends of the hose barbs and thread the hose barbs into the sample and product outlet ports of the new three-way valve.
    c. Wrap antiseizing tape on the threads of the new three-way valve and thread the new three-way valve onto the RO vessel product outlet pipe.
    d. Slide the hose clamp and hose over the end of the sample and product outlet barbs of the three-way valve. If the product hose is replaced, cut it to length such that it does not have a low point below the 3-way valve.
    e. Tighten the hose clamp around the hoses and barbs.

Product Relief Valve RV-501 Replacement:

Parts (TM 10-4610-309-23P):
Product Relief Valve RV-501
Gasket
Equipment Condition:
TWPS in Standby Shutdown Without Draining Down
Army: TWPS main breaker off
Marine Corps: TWPS disconnected from power source

Replace Product Relief Valve RV-501 as follows (see Figure 9):

WARNING

The TWPS must be in Shutdown and the TQG and TWPS main breaker must be off (Army) or the TWPS disconnected from its power source (Marine Corps) prior to removing or installing product Relief Valve RV-501. Failure to observe this warning can result in injury or damage to equipment.

1. Remove Product Relief Valve RV-501 as follows:
    a. Open Product Utility Valve V-511 to drain the product line. Then close the valve.
    b. Remove the sanitary clamp, gasket, and elbow pipe from the relief valve and fixed pipe.
    c. Inspect the gasket and replace if necessary.
    d. Remove and discard the relief valve.

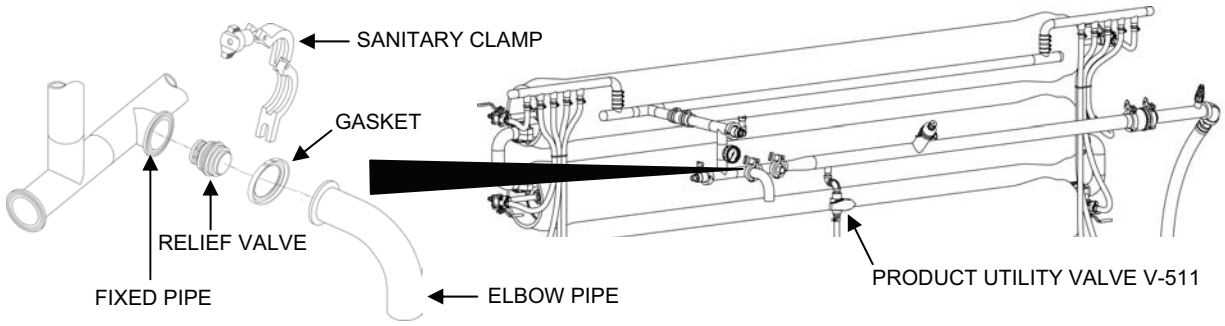

Figure 9. Product Relief Valve RV-501 Replacement.

2. Install the new product relief valve as follows:
    a. Position the new relief valve with the spring pointing upstream toward the fixed pipe and the disk pointing downstream toward the removable elbow pipe.
    b. Secure the fixed pipe, the new relief valve, the gasket, and the elbow pipe together using the sanitary clamp.

Product Vacuum Breaker VB-501 Replacement:

Parts (TM 10-4610-309-23P):
Product Vacuum Breaker VB-501
1-½ in. Sanitary Clamp Gasket
Equipment Condition:
TWPS in Standby Shutdown Without Draining Down
Army: TWPS main breaker off
Marine Corps: TWPS disconnected from power source

Replace Product Vacuum Breaker VB-501 as follows:

WARNING

The TWPS must be in Shutdown and the TQG and TWPS main breaker must be off (Army) or the TWPS disconnected from its power source (Marine Corps) prior to removing or installing Vacuum Breaker VB-501. Failure to observe this warning can result in injury or damage to equipment.

1. Remove Product Vacuum Breaker VB-501as follows (see Figure 10):
    a. Open Product Utility Valve V-511 to drain the product line, then close the valve.
    b. Remove the sanitary clamp that secures Product Vacuum Breaker VB-501 between the fixed pipe and the removable pipe.
    c. Remove the removable pipe.
    d. Discard the vacuum breaker.
    e. Inspect the sanitary clamp gasket for damage or deterioration and replace if needed.

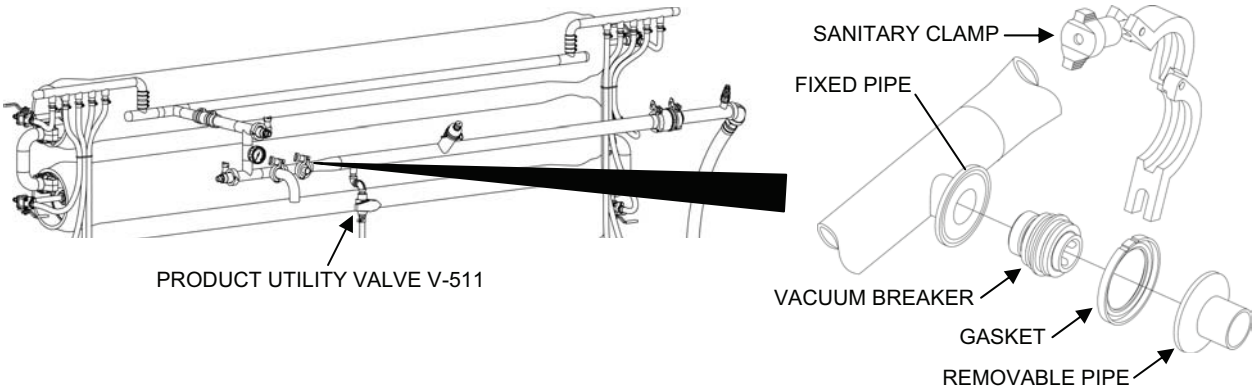

Figure 10. Product Vacuum Breaker VB-501 Replacement.

2. Install the new vacuum breaker as follows:
    a. Position the new vacuum breaker with the disk pointing upstream toward the fixed pipe and the spring pointing downstream toward the removable pipe.
    b. Secure the new vacuum breaker, the fixed pipe, the gasket, and the removable pipe together using the sanitary clamp.

Product Check Valve V-512 Replacement:

Parts (TM 10-4610-309-23P):
Product Check Valve V-512
1-½ in. Sanitary Clamp Gasket
Equipment Condition:
TWPS in Standby Shutdown Without Draining Down
Army: TWPS main breaker off
Marine Corps: TWPS disconnected from power source

Replace Product Check Valve V-512 as follows (see Figure 11):

WARNING

The TWPS must be in Shutdown and the TQG and TWPS main breaker must be off (Army) or the TWPS disconnected from its power source (Marine Corps) prior to removing or installing Check Valve V-512. Failure to observe this warning can result in injury or damage to equipment.

1. Remove Product Check Valve V-512 as follows:
    a. Open Product Utility Valve V-511 to drain the product line.
    b. Loosen the pipe clamp holding the product pipe downstream of the check valve (not shown in Figure).
    c. Remove the sanitary clamps on both sides of Product Check Valve V-512.
    d. Slide the pipe section toward the outlet to gain clearance and remove the check valve.
    e. Inspect the 1-½ in. diameter sanitary clamp gaskets for damage or deterioration and replace if needed.

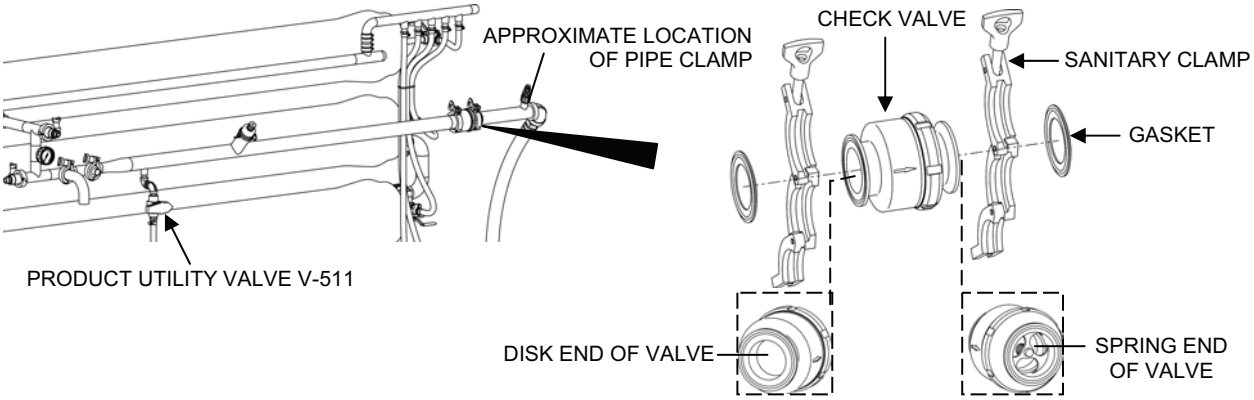

Figure 11. Product Check Valve V-512 Replacement.

2. Install the new product check valve as follows:
    a. Position the new product check valve in-line with the disk pointing upstream toward Product Vacuum Breaker VB-501 and with the check valve spring pointing downstream toward the chemical injection point and discharge end of the product line.
    b. Be sure the gasket is in place between the valve and the upstream pipe flange. Install the sanitary clamp and tighten.
    c. Be sure the gasket is in place between the valve and the downstream pipe section. Push the pipe section up to the check valve. Install the sanitary clamp and tighten.
    d. Re-tighten the pipe clamp.

Main and Auxiliary Pressure Control Valves HCV-401 and HCV-401A Replacement:

Parts (TM 10-4610-309-23P):
Main Pressure Control Valve HCV-401
Auxiliary Pressure Control Valve HCV-401A
Material:
Tape, antiseizing (WP 0037, Table 1, item 49)
Equipment Condition:
TWPS in Standby Shutdown With Drain-Down
Army: TWPS main breaker off
Marine Corps: TWPS disconnected from power source

Replace Main Pressure Control Valve HCV-401 or Auxiliary Pressure Control Valve HCV-401A as follows (see Figure 12):

WARNING

The TWPS must be in Shutdown and the TQG and TWPS main breaker must be off (Army) or the TWPS disconnected from its power source (Marine Corps) prior to removing or installing Main Pressure Control Valve HCV-401 or Auxiliary Pressure Control Valve HCV-401A. Failure to observe this warning can result in injury or damage to equipment.

1. Remove Main Pressure Control Valve HCV-401 or Auxiliary Pressure Control Valve HCV-401A as follows:
    a. Make sure the TWPS is in Standby Shutdown With Drain-Down.
    b. Loosen and remove the hose clamp and hose from the outlet side of the pressure control valve.
    c. Unscrew the valve from the threaded inlet pipe at the inlet side of the valve.
    d. Unscrew the threaded outlet pipe from the outlet side of the valve.
    e. Discard the valve.
2. Install the new valve as follows:
    a. Clean off any tape residue remaining on the threaded end of both the valve inlet and outlet pipes.

NOTE

Make sure to thread the outlet pipe into the outlet port of the pressure control valve. An arrow on the side of the Main Pressure Control Valve HCV-401 points to the outlet port of the valve. With the valve open, the valve handle of Auxiliary Pressure Control Valve HCV-401A points to the outlet port of the valve.

b. Wrap antiseizing tape on the outlet pipe threads and screw the outlet pipe into the outlet port of the new pressure control valve.
c. Wrap antiseizing tape on the inlet pipe threads and thread the new pressure control valve onto the inlet pipe.
d. Install the hose clamp and outlet hose over the end of the outlet pipe and tighten the clamp.

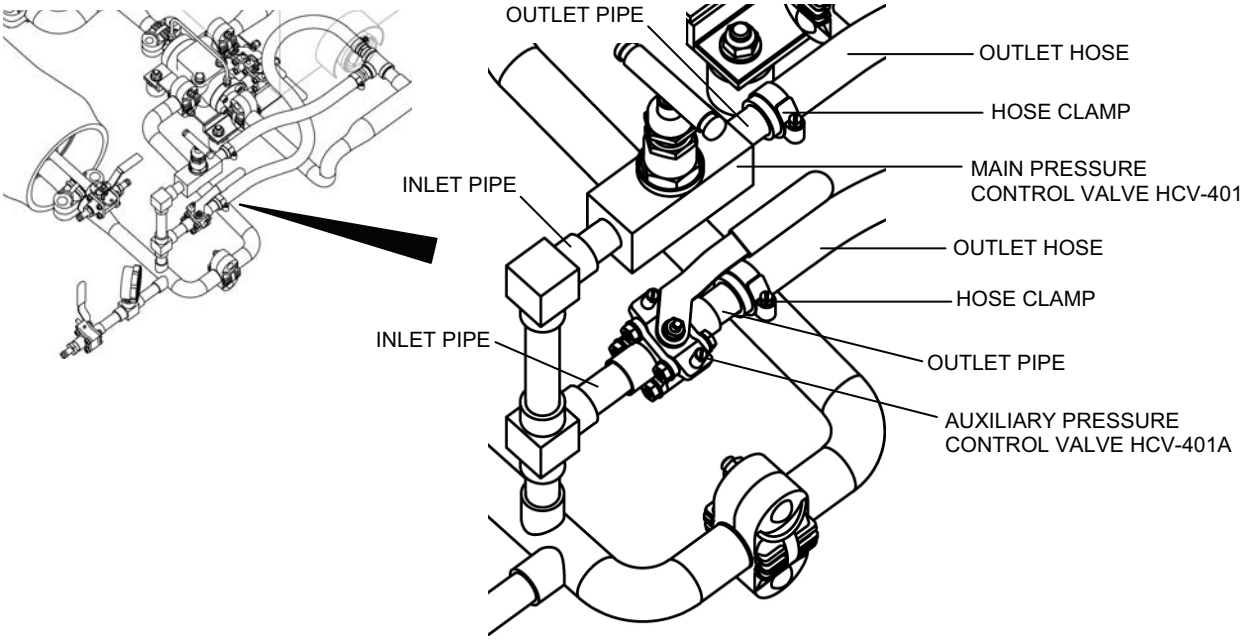

Figure 12. Main Pressure Control Valve HCV-401 Replacement.

Pressure Recovery Turbocharger PRT-1 Replacement:

Parts (TM 10-4610-309-23P):
Pressure Recovery Turbocharger
1-in. grooved coupling gasket
Material:
Corrosion preventive compound (WP 0038, Table 1, item 19)
Glycerin (WP 0038, Table 1, item 24)
Tape, antiseizing (WP 0038, Table 1, item 49)
Equipment Condition:
TWPS in Standby Shutdown With Drain-Down
Army: TWPS main breaker off
Marine Corps: TWPS disconnected from power source
Replace Pressure Recovery Turbocharger PRT-1 as follows:

WARNING

The TWPS must be in Shutdown and the TQG and TWPS main breaker must be off (Army) or the TWPS disconnected from its power source (Marine Corps) prior to removing or installing Pressure Recovery Turbocharger PRT-1. Failure to observe this warning can result in injury or damage to equipment.

1. Remove Pressure Recovery Turbocharger PRT-1 from the TWPS as follows (see Figure 13):
   a. Make sure the TWPS is in Standby Shutdown With Drain-Down.
   b. Open the turbocharger reject drain valve V-410.
   c. Open the turbocharger feed drain valve V-303.
   d. Remove the four grooved couplings that secure the inlet and outlet connections of the turbocharger to the RO feed and reject inlet and outlet pipes. Push the gaskets back onto the pipe ends.
   e. Remove the second grooved coupling from the “S” shaped pipe between the RO vessel #5 reject outlet and the turbocharger. Remove the pipe and lay aside.
   f. Remove the two turbocharger plastic drain tubes (see Figure 14).
   g. Remove the four lock nuts and flat washers from the threaded studs that secure the turbocharger base plate to the TWPS floor.
   h. Remove the turbocharger valve bracket and set aside (see Figure 14).
   i. Lift the turbocharger assembly off of the studs and remove it from the TWPS.

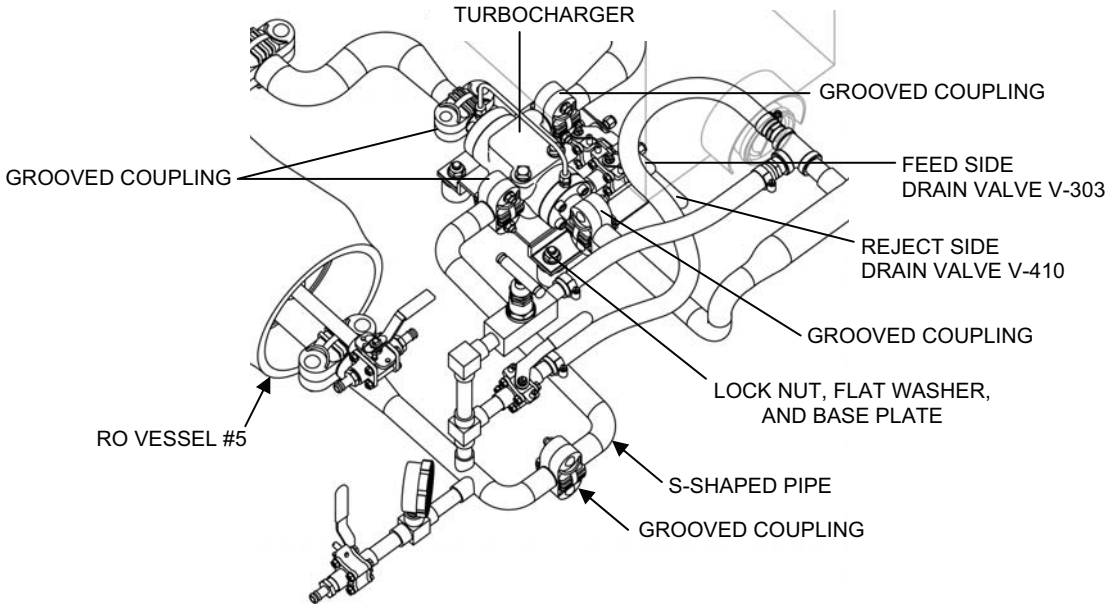

Figure 13. Removal of Pressure Recovery Turbocharger PRT-1 from the TWPS.

2. Remove Pressure Recovery Turbocharger PRT-1 from its base plate as follows (see Figure 14):
   a. Unscrew the drain tube nuts from the elbow fittings under the turbocharger.
   b. Set drain valves V-410 and V-303 (with their metal drain tubes still attached) aside.
   c. Unscrew the two elbow fittings from the bottom of the turbocharger.
   d. Remove the four cap screws, four lock washers, and four flat washers that secure the base plate to the bottom of the turbocharger and remove the turbocharger.
   e. Unscrew the two straight fittings from the bottom of the turbocharger.

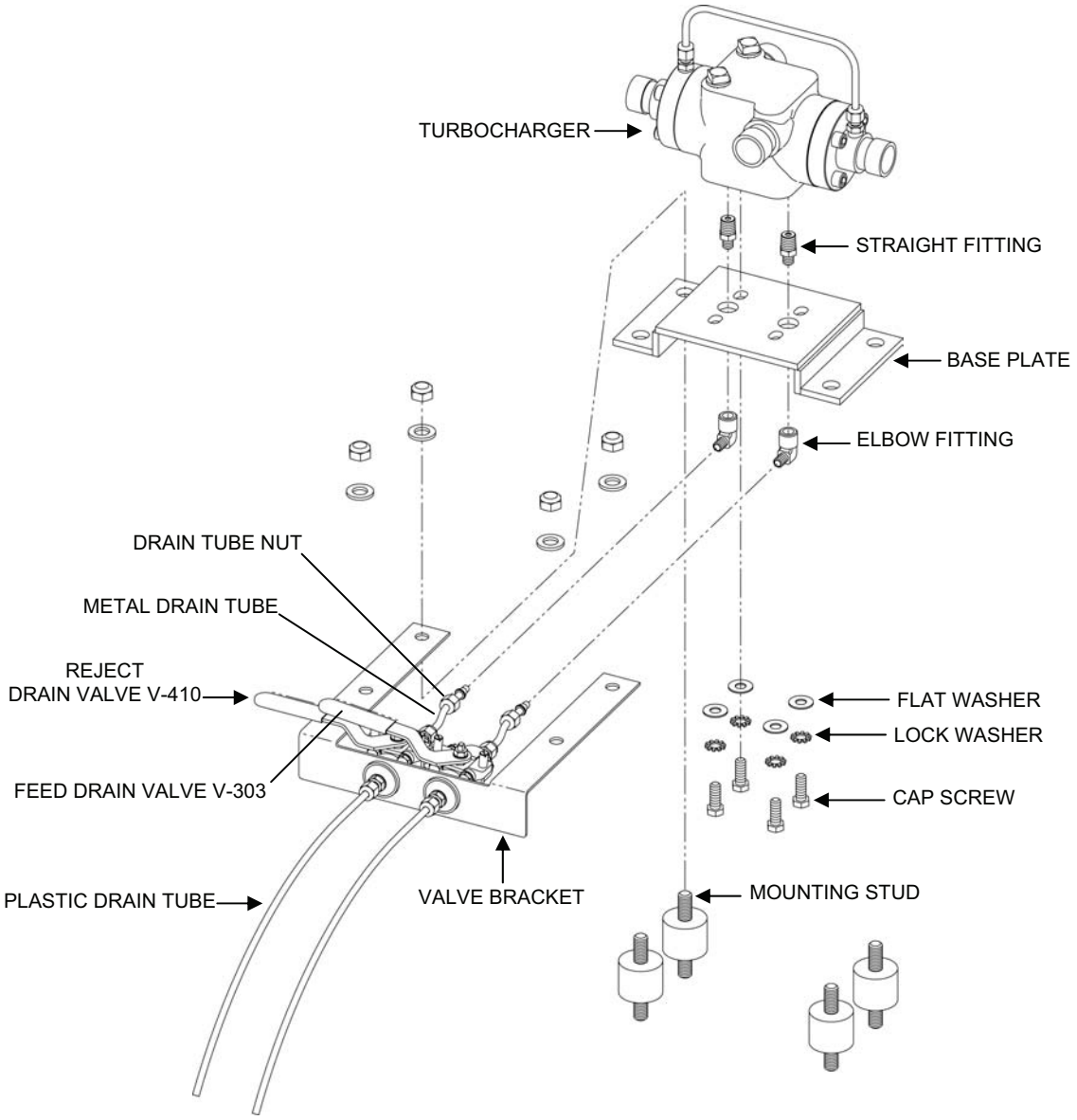

Figure 14. Removal of Pressure Recovery Turbocharger PRT-1 from Its Base Plate.

3. Install the new turbocharger to the base plate as follows (see Figure 14):
    a. Clean the external threads of the straight and elbow fittings.
    b. Wrap antiseizing tape on the threads at both ends of the straight fittings and screw them into the bottom of the turbocharger.
    c. Secure the base plate to the turbocharger using the four caps crews, four lock washers, and four flat washers.
    d. Wrap antiseizing tape on the threads of the elbow fittings and screw the elbow fittings into the straight fittings at the bottom of the turbocharger. Make sure the elbow fittings point out to the front of the turbocharger.
    e. Move the drain valves into place on the base plate and screw the drain tube nuts onto the elbow fittings under the turbocharger.
4. Install the turbocharger assembly onto the TWPS as follows (see Figure 13):
    a. Inspect the four 1-in. diameter grooved coupling gaskets for damage or deterioration and replace if needed. Lubricate with glycerin and slide the gaskets over the RO feed and reject inlet and outlet pipes.

WARNING

The turbocharger feed and reject inlet and outlet pipes must be installed to the correct system feed and reject inlet and outlet pipes. Failure to observe this warning can result in injury or damage to equipment.

    b. Apply corrosion preventive compound to the turbocharger mounting studs that are still threaded into the TWPS floor (see Figure 14).
    c. Set the turbocharger in place so that the holes in the base plate fit over the studs. Make sure the valves are facing the front of the TWPS.
    d. Set the valve bracket into place.
    e. Secure the valve bracket and base plate to the studs with the four flat washers and four lock nuts. Tighten evenly.
    f. Reconnect the “S” shaped reject out pipe to the RO vessel #5 reject out pipe.
    g. Reposition the grooved coupling gaskets to fit over the ends of the turbocharger inlet and outlet pipes and their matching RO feed and reject inlet and outlet lines.
    h. Secure the turbocharger inlet and outlet pipes to the RO feed and reject inlet and outlet lines using the grooved couplings.
    i. Reconnect the two plastic drain tubes.
    j. Place system back into service and inspect for leaks.

Turbocharger Feed Drain Valve V-303 and Reject Drain Valve V-410 Replacement:

Parts (TM 10-4610-309-23P):
    Turbocharger Feed Drain Valve V-303
    Turbocharger Reject Drain Valve V-410
Material:
    Tape, antiseizing (WP 0038, Table 1, item 49)
Equipment Condition:
    TWPS in Standby Shutdown With Drain-Down
    Army: TWPS main breaker off
    Marine Corps: TWPS disconnected from power source

Replace Turbocharger Feed Drain Valve V-303 or Reject Drain Valve V-410 as follows (see Figure 15):

WARNING

The TWPS must be in Shutdown and the TQG and TWPS main breaker must be off (Army) or the TWPS disconnected from its power source (Marine Corps) prior to removing or installing Pressure Recovery Turbocharger PRT-1 or the Turbocharger Feed and Reject Drain Valves V-303 and V-410. Failure to observe this warning can result in injury or damage to equipment.

1. Make sure the TWPS is in Standby Shutdown With Drain-Down.
2. Remove the turbocharger from the TWPS. Refer to **REPLACE** and **Pressure Recovery Turbocharger PRT-1**.
3. Remove the drain valve as follows:
   a. Unscrew the drain tube nut from the front of the valve and remove the plastic drain tube.
   b. Unscrew the drain tube nut from the back of the valve and remove the valve from the metal drain tube.
   c. Discard the valve.

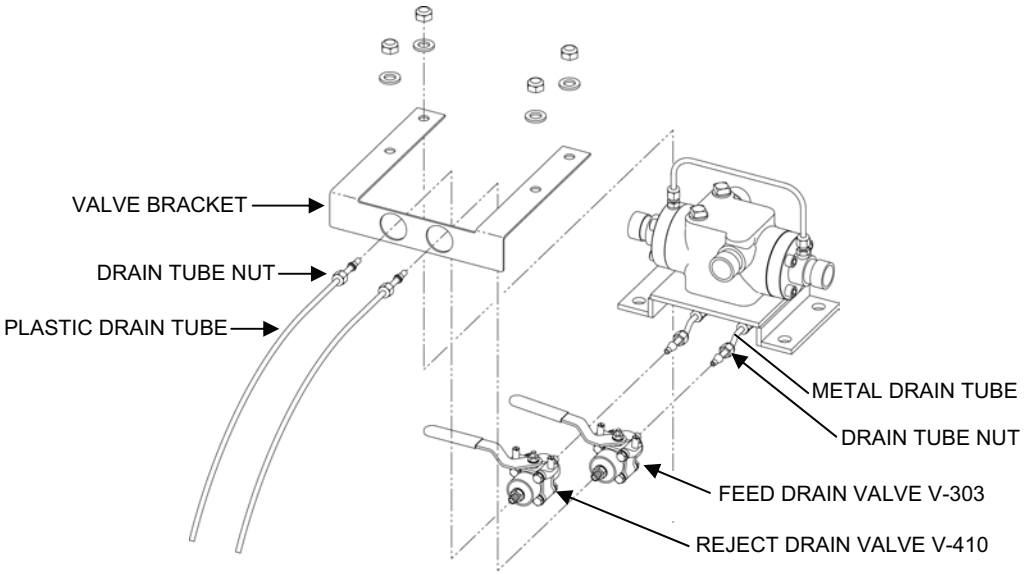

Figure 15. Turbocharger Feed or Reject Drain Valve V-303 / V-410 Replacement.

4. Install the new drain valve as follows:
   a. Wrap antiseizing tape on the valve inlet and outlet threads.
   b. Note the proper orientation of the valve (see Figure 15).
   c. Screw the drain tube nut on the metal drain tube onto the inlet of the valve.
   d. Fit the valve outlet through the opening in the front of the valve bracket and screw the drain tube nut on the plastic drain tube onto the outlet of the valve.
5. Install the turbocharger assembly onto the TWPS. Refer to **REPLACE** and **Pressure Recovery Turbocharger PRT-1**.

Reject Backflow Check Valve V-411 Replacement:

Parts (TM 10-4610-309-23P):
Reject Backflow Check Valve V-411
1-½ in. Grooved Coupling Gasket
Equipment Condition:
TWPS in Standby Shutdown Without Draining Down
Army: TWPS main breaker off
Marine Corps: TWPS disconnected from power source

Replace Reject Backflow Check Valve V-411 as follows (see Figure 16):

WARNING

The TWPS must be in Shutdown and the TQG and TWPS main breaker must be off (Army) or the TWPS disconnected from its power source (Marine Corps) prior to removing or installing Reject Backflow Check Valve V-411. Failure to observe this warning can result in injury or damage to equipment.

1. Remove the grooved couplings from both ends of Reject Backflow Check Valve V-411. Slide the gaskets back over the pipe ends.
2. Remove Reject Backflow Check Valve V-411.
3. Inspect the 1-½ in. diameter grooved coupling gaskets for damage or deterioration and replace if needed.
4. Position the new Reject Backflow Check Valve V-411 in the reject line so that the arrow on the side of the valve points downstream (to the right) and the hinge post is vertical.
5. Secure the ends of the Reject Backflow Check Valve V-411 to the reject line using the two grooved couplings.

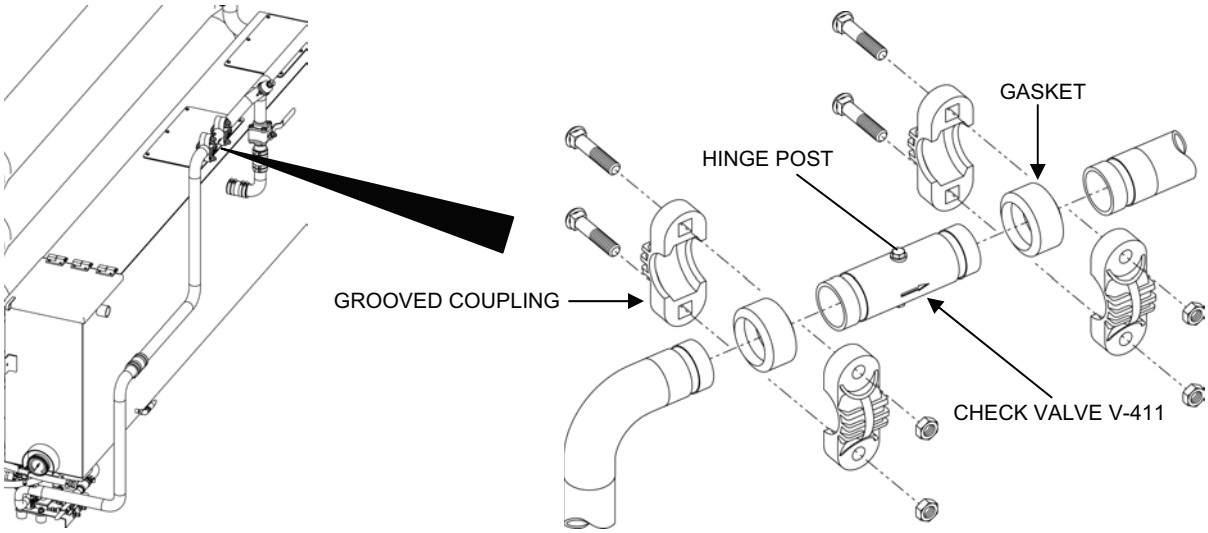

Figure 16. Reject Backflow Check Valve V-411 Replacement.

Waste Out Hose and Adaptor A-09 Replacement:

Parts (TM 10-4610-309-23P):
- 4-in. x 5-ft. waste outlet suction hose
- 4-in. suction hose gasket
- Adaptor A-09
- Gasket, 4-in. adaptor
- Gasket, 6-in. adaptor
- 6-in. x 50-ft. waste outlet discharge hose

Equipment Condition:
- TWPS in Standby Shutdown Without Draining Down
- Army TWPS: TWPS main breaker off
- Marine Corps TWPS: TWPS disconnected from power source

Inspect and replace the waste outlet hoses, Adaptor A-09, and hose and adaptor gaskets as follows (see Figure 17:

WARNING

High velocity discharge hazard. The blow back step of the automatic MF backwash operation results in a sudden and very high velocity surge in the waste outlet hoses. The TWPS must be in Shutdown and the TQG and TWPS main breaker must be off (Army) or the TWPS disconnected from its power source (Marine Corps) prior to removing or installing reject hose or adaptor A-09. Failure to observe this warning can result in injury.

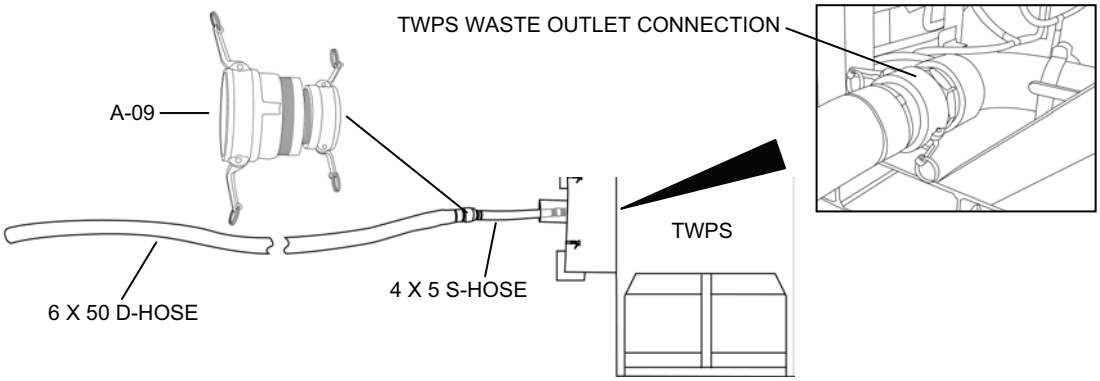

Figure 17. Waste Outlet Hoses and Adaptor A-09.

1. Inspect the 4-in. by 5-ft. waste outlet suction hose for leaks, cracks or other damage.
2. Replace the entire hose assembly if damage is found.
3. Inspect adaptor A-09 for leaks, cracks, or other damage.
4. Replace adaptor A-09 if damage is found.
5. Inspect the 6-in. by 50-ft. waste outlet discharge hose for leaks, cracks or other damage.
6. Replace the entire hose assembly if damage is found.
7. Check the female ends of the 4 x 5 hose and adaptor A-09 for missing or damaged gaskets.
8. If a gasket is missing or damaged, install a new gasket in the female end of the hose or adaptor.

REPAIR

Waste Out Rupture Disk RD-401 Repair:

Parts:
Rupture disk (BII and TM 10-4610-309-23P)
Equipment Condition:
TWPS in Standby Shutdown Without Draining Down
Army TWPS: Generator off and TWPS main breaker off
Marine Corps TWPS: TWPS disconnected from power source

Replace the rupture disk in Waste Out Rupture Disk RD-401 assembly as follows (see Figure 18):

WARNING

High velocity discharge hazard. The blow back step of the automatic MF backwash operation results in a sudden and very high velocity surge in the waste outlet hoses. The TWPS must be in Shutdown and the TQG and TWPS main breaker must be off (Army) or the TWPS disconnected from its power source (Marine Corps) prior to removing or installing waste out rupture disk RD-401. Failure to observe this warning can result in injury.

1. Remove the rupture disk from rupture disk assembly RD-401 as follows:
   a. Note the position of the vent pipe for the position it needs to be in when reinstalled.
   b. While holding the vent pipe, unthread the nut from the inlet connection.
   c. Carefully lift the vent pipe and nut off of the inlet connection. The outlet connection will come out with the vent pipe and nut.
   d. Lift the rupture disk off of the inlet connection.

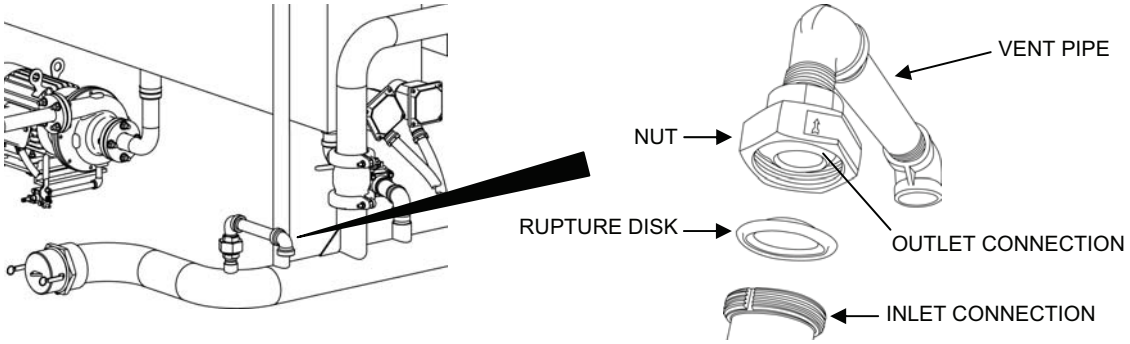

Figure 18. RD-401 Rupture Disk Replacement.

2. Install the new rupture disk as follows:
   a. Insert a new rupture disk in the inlet connection with the dome side of the disk facing up.
   b. Position the outlet connection, nut and vent pipe onto the rupture disk.
   c. Thread the nut onto the inlet connection, position the vent pipe as it was before it was removed, and tighten the nut.

RO Feed Tank Cover Hinge Repair:

Parts (TM 10-4610-309-23P):
Nylon Liftoff Hinge
Equipment Condition:
TWPS in Standby Shutdown Without Draining Down

Replace a nylon liftoff hinge on the RO feed tank cover as follows (see Figure 19):

WARNING

High velocity discharge hazard. The blow back step of the automatic MF backwash operation results in a sudden and very high velocity surge in the RO feed tank. There is no risk of injury from this surge while working on the RO feed tank cover. However, the suddenness of the surge and the noise accompanying it may startle the worker into a reflexive reaction that could result in injury. Therefore, the TWPS must be in Shutdown prior to working on the RO feed tank cover. Failure to observe this warning can result in injury.

CAUTION

Do not allow the screws, lock washers, or nuts to fall into the RO feed tank. Pump inlet strainer S-3 will not prevent this mounting hardware from entering the pump. Failure to observe this caution can result in severe damage to and the failure of the RO feed pump if the hardware is sucked into the pump.

1. Remove the four screws, lock washers, and nuts from the hinge to be replaced.
2. Lift off the hinge.
3. Place the new hinge on the RO feed tank and feed tank cover.
4. Secure the new hinge using the four screws, lock washers, and nuts.

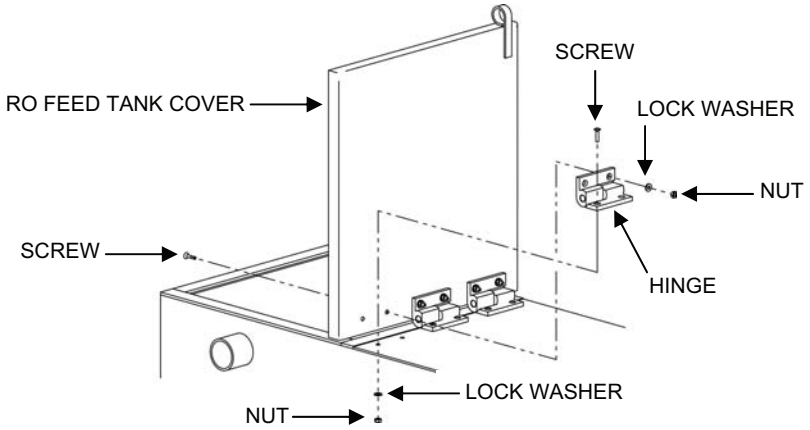

Figure 19. RO Feed Tank Cover Hinge Replacement.

RO Feed Pump P-4 Repair:

Parts (TM 10-4610-309-23P):
- Seal Kit
- Shaft Sleeve
- Wear Ring

Materials:
- Solvent (WP 0038, Table 1, item 21)
- Glycerin (BII) (WP 0038, Table 1, item 24)
- Sealing compound (WP 0038, Table 1, item 40)
- Antiseizing tape (WP 0038, Table 1, item 49)
- Clean, dry rags (WP 0038, Table 1, item 39)

Equipment Condition:
- TWPS in Standby Shutdown With Drain-Down
- Army: Generator off and TWPS main breaker off
- Marine Corps: TWPS disconnected from power source

Repair RO Feed Pump P-4 (including inspecting and replacing the pump seal, shaft sleeve, and wear ring) as follows:

WARNING

The TWPS must be in Shutdown and the TQG and TWPS main breaker must be off (Army) or the TWPS disconnected from its power source (Marine Corps) prior to removing or installing the RO feed pump. Failure to observe this warning can result in injury or death from electrocution or damage to equipment.

1. Make sure the TWPS is in Standby Shutdown With Drain-Down.
2. Remove the pump/motor assembly from the TWPS skid. Refer to **REPLACE** and **RO Feed Pump P-4 Pump/ Motor Assembly Replacement**.
3. Remove the pump from the adapter as follows (see Figure 20):
   a. Remove the eight cap screws that hold the pump casing to the adapter and pull the casing off.
   b. Remove and discard the pump casing gasket.
   c. Unscrew the street elbow with the drain valve and hose from the pump drain port.

NOTE

It may be necessary to hold the impeller using a strap wrench or a pipe wrench to keep it from turning while loosening the screw with a socket wrench. If the screw is corroded onto the impeller, it may be necessary to apply corrosion preventive compound where the screw and impeller meet.

   d. Remove the impeller screw.
   e. Remove and discard the screw gasket.
   f. Carefully pry the impeller off of the shaft.
   g. Remove the spring.
   h. Remove the impeller key.
   i. Pull the shaft sleeve with the seal off the shaft.
   j. Lift the pump cover off the adapter. If required, carefully pry the cover off the adapter.

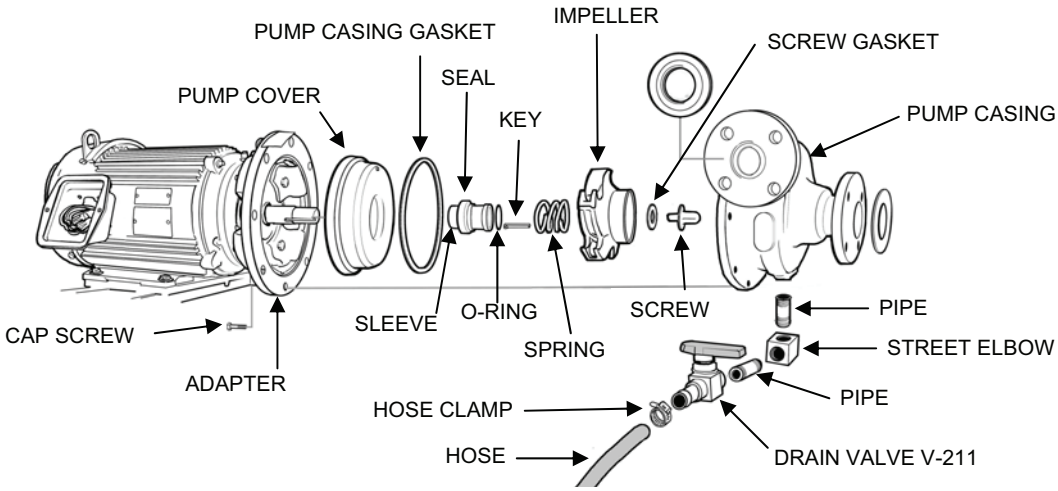

Figure 20. RO Feed Pump Removal.

4. Inspect the following parts for wear or damage:
   a. Seal on the shaft sleeve (do not remove the seal parts if not replacing).
   b. Stationary seat and stationary seat gasket in the pump cover (do not remove the stationary seat and seat gasket from the pump cover if not replacing them).
   c. Shaft sleeve.
   d. Wear ring.
5. If the seal kit (seal, stationary seat, seat gasket, and spring) and shaft sleeve need to be replaced, remove them as follows (see Figure 21):

NOTE

If the seal sticks tightly to the drive sleeve, it may be necessary to bathe it in oil to loosen the adhesive, or you may have to cut the seal away with a knife.

   a. Twist and slide the seal off the drive sleeve.
   b. Pry the stationary seat and seat gasket out of the bore of the pump cover.

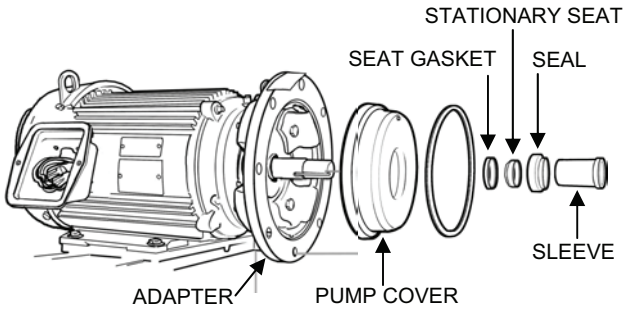

Figure 21. Seal Kit Component Removal.

6. Install a new seal kit (seal, stationary seat, seat gasket, and spring) and shaft sleeve as follows (see Figure 22):
    a. Clean the sleeve, pump cover bore, and pump shaft thoroughly with solvent, and dry with a clean cloth.

NOTE

Do not use grease to lubricate the sleeve and mechanical seal parts. Grease will prevent the seal from setting and result in leakage around the shaft.

Once the seal is placed onto the sleeve, the rest of the assembly must be completed without delay to ensure that the seal sets properly.

    b. Lightly lubricate the bore of the new pump cover with glycerin.
    c. Press the stationary seat gasket and then the stationary seat into the bore so they are seated firmly and squarely.
    d. Lightly lubricate the new seal with glycerin and slide it onto the new sleeve with the carbon side facing the small end of the sleeve. Complete the rest of the assembly without delay.
    e. Slide the new pump cover with the stationary seat over the shaft. Avoid bumping the seat as you slide it over the shaft.
    f. Position the pump cover so that the internal bypass hole in the cover is between the 1 and 2 o'clock position.
    g. Tap the cover with a rubber mallet if necessary to seat the cover securely.
    h. Insert the new sleeve O-ring into the I.D. of the sleeve if it is not already in place.
    i. Lubricate the I.D. of the sleeve and the O.D. (outer diameter) of the shaft with glycerin.
    j. Slide the sleeve with the seal onto the shaft with the small end of the sleeve going onto the shaft first. Push the sleeve all the way onto the shaft.
    k. Align the shaft and sleeve keyways.
    l. Position the key with the thick end of the key toward the motor and the flat back of the key against the motor shaft.
    m. Insert the key in the keyway.
    n. Discard the seal spring retainer and place the new spring over the end of the sleeve and over the seal assembly.
    o. Slide the impeller onto the shaft over the key.
    p. Place sealant on the impeller screw threads.
    q. Place the impeller screw gasket onto the impeller.
    r. Push down on the impeller and thread the impeller screw into the end of the shaft.
    s. Tighten the impeller screw.
    t. Check the freedom of the rotating parts by hand-rotating the impeller. If the impeller rubs against the pump cover, try tapping the cover down again with the rubber mallet to seat the cover on the adapter.

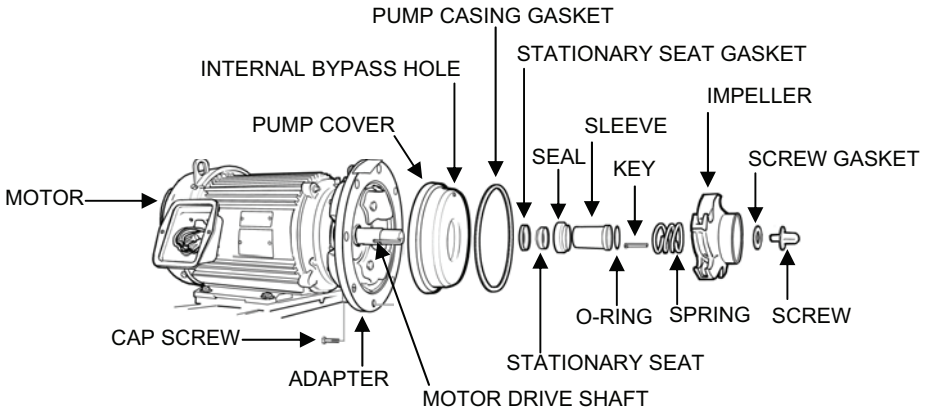

Figure 22. RO Feed Pump Installation.

7. If the wear ring is damaged, replace it as follows (see Figure 23):
   a. Drill a hole through the wear ring in two places opposite each other. Be careful not to damage the pump casing.
   b. Crack the remaining ring wall and remove the wear ring.
   c. Make sure the surfaces of the new wear ring and the pump casing where the ring is to be installed are free of burrs. Remove any burrs with a fine emery cloth.
   d. Press the new wear ring into place.
   e. Evenly drive the ring into place.

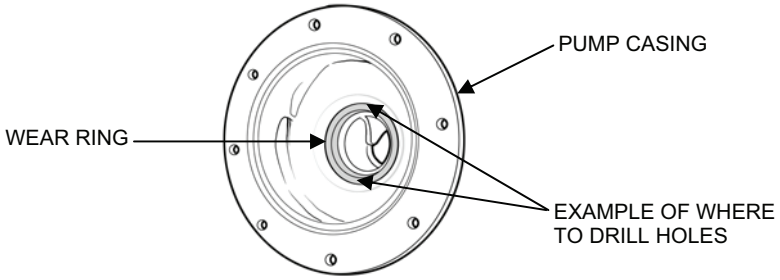

Figure 23. Wear Ring Removal.

8. Reinstall the pump casing as follows:
   a. Install a new pump casing gasket on the shoulder of the pump cover.
   b. Position the pump casing so that the pump discharge flange points toward you when the motor is on your left and the pump is on your right.
   c. Place the new pump casing onto the pump cover and secure with the eight cap screws.
   d. Tighten the cap screws uniformly.
   e. Clean off any tape residue remaining on the threads of the street elbow pipes.
   f. Wrap antiseizing tape on the elbow pipe threads and screw the street elbow into the pump casing. Make sure the elbow, drain valve, and hose are facing in the same direction as the pump discharge flange.

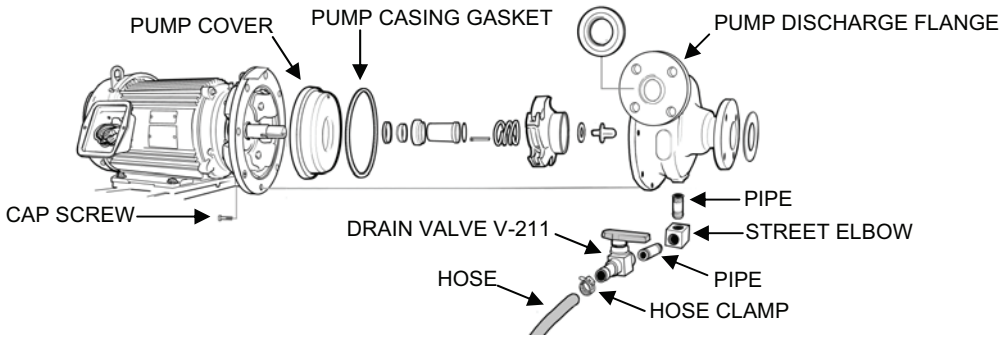

Figure 24. Pump Installation.

9. Install the RO Feed Pump P-4 Assembly onto the TWPS skid. Refer to **REPLACE** and **RO Feed Pump P-4 Pump/ Motor Assembly Replacement**.
10. Place the MF Feed Pump back into service and inspect it for leaks.

Pressure Recovery Turbocharger PRT-1 Repair:

Parts (TM 10-4610-309-23P):
Kit, turbocharger repair
Materials:
Glycerin (BII) (WP 0038, Table 1, item 24)
Clean, dry rags (WP 0038, Table 1, item 39)
Equipment Condition:
TWPS in Standby Shutdown With Drain-Down
Army: Generator off and TWPS main breaker off
Marine Corps: TWPS disconnected from power source

Turbocharger repair consists of disassembling and inspecting the unit, and replacing worn or damaged parts. Repair the turbocharger as follows:

1. Make sure the TWPS is in Standby Shutdown With Drain-Down.
2. Remove the turbocharger from the TWPS and from its base plate. Refer to **REPLACE** and **Pressure Recovery Turbocharger PRT-1**.
3. Disassemble the turbocharger as follows (see Figure 25):
   a. Remove the thrust line assembly and straight adapters.
   b. Remove the pump and turbine end caps (4 cap screws).
   c. Remove and discard the cap O-rings.

NOTE

It may be necessary to remove the plug as indicated in Figure 25 and insert a thin screwdriver or other tool into the hole to keep the impeller from turning while you remove the retaining screw.

   d. Remove the pump impeller retaining screw and washer.
   e. Remove the pump impeller and impeller key by gently tapping on the end of the threaded turbine impeller shaft.
   f. Remove the turbine impeller/shaft assembly.

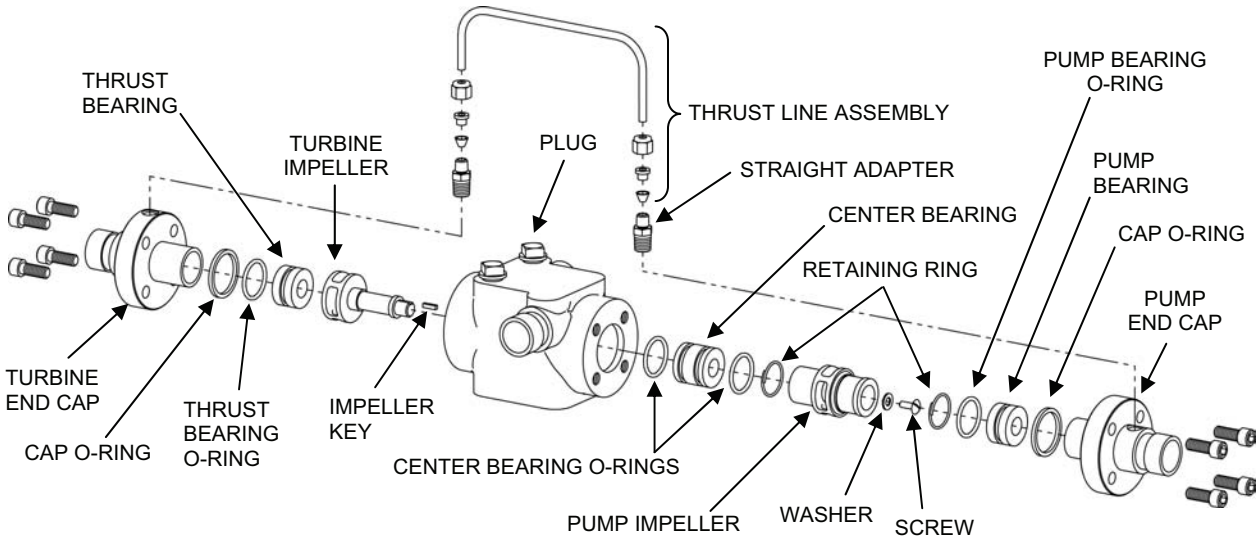

Figure 25. Pressure Recovery Turbocharger PRT-1.

NOTE
Light scratches are normal and not a reason to replace the components.

4. Inspect the bearing surfaces of the turbine impeller/shaft assembly for grooves or ridges. If you find grooves or ridges, or excessive wear of the impeller, replace the impeller/shaft assembly.

CAUTION

Attempting to remove the bearings may result in damage to the bearings. Do not remove the bearings unless you intend to replace them.

5. Inspect the pump bearing, center bearing, and turbine thrust bearing for cracks, grooves, or ridges. Replace any damaged bearings as described in the following steps.
6. If needed, replace the pump bearing as follows (see Figure 25):
    a. Place the pump end cap with the bearing side facing up.
    b. Remove the pump bearing retaining ring.
    c. Pry out the bearing. Discard the bearing and O-ring.
    d. Clean the bearing bore with a clean rag.
    e. Place a new O-ring into the groove on the new bearing. Lubricate the O-ring and bearing bore in the end cap with glycerin.
    f. Insert the bearing into the bearing bore until it is fully seated, making sure the O-ring is not pinched.
    g. Install the bearing retaining ring.
7. If needed, replace the center bearing as follows (see Figure Figure 25):
    a. Place the turbocharger casing horizontally on a clean surface.
    b. Remove the center bearing retaining ring.
    c. Gently tap the center bearing toward the pump end of the casing until it is free of the bearing bore. Discard the bearing and the two O-rings.
    d. Clean the bearing bore with a clean rag.

e. Place two new O-rings into the grooves on the new bearing. Lubricate the O-rings and bearing bore with glycerin.
f. Gently insert the bearing into the bore until it is fully seated, making sure the O-rings are not pinched.
g. Install the bearing retaining ring.

8. If needed, replace the thrust bearing as follows (see Figure 25):
   a. Place the turbine end cap on a clean surface with the bearing side facing down. Support the cap on small blocks placed around the edge of the bearing bore so the bearing is free to drop out of the bore.
   b. Tap around the edge of the thrust bearing until it drops out of the bore. Discard the bearing and O-ring.
   c. Clean the bearing bore with a clean rag.
   d. Place a new O-ring into the groove on the new bearing. Lubricate the O-ring and bearing bore with glycerin.
   e. Making sure the small hole in the thrust bearing is lined up with the straight adapter at the top of the turbine end-cap bore. Gently insert the bearing into the bore until it is fully seated. Make sure the O-ring is not pinched.
9. Reassemble the turbocharger as follows (see Figure 25):
   a. Insert the turbine impeller/shaft assembly through the turbine end of the center bearing.

CAUTION

Make sure the washer is evenly seated in its counter-bore in the pump impeller. Improper seating can cause equipment damage from impeller misalignment or loosening of the screw.

NOTE

It may be necessary to insert a thin screwdriver or other tool into the turbocharger plug hole to keep the impeller from turning while you install the retaining screw.

   b. Install the impeller key, pump impeller, washer, and screw. Torque the screw to 72 in.-lbs.
   c. Install the plug if removed.
   d. Position the casing vertically with the pump end facing up.
   e. Slide a new O-ring onto the pump end cap.
   f. Carefully slide the end cap into the casing until it is fully seated, making sure the thrust bearing water supply tube connection is toward the top (label side) of the casing. Fasten the cap in place using the four cap screws. Torque to 240 in.-lbs.
   g. Position the casing vertically with the turbine end facing up.
   h. Slide a new O-ring onto the turbine end cap.
   i. Carefully slide the end cap into the casing until it is fully seated, making sure the thrust bearing water supply tube connection is toward the top (label side) of the casing. Fasten the cap in place using the four cap screws. Torque to 240 in.-lbs.
   j. Reinstall the thrust bearing water supply tube.
10. Reinstall the turbocharger on its base plate and then on the TWPS. Refer to **REPLACE** and **Pressure Recovery Turbocharger PRT-1**.

END OF WORK PACKAGE

TACTICAL WATER PURIFICATION SYSTEM (TWPS) FIELD MAINTENANCE PROCEDURES HIGH PRESSURE PUMPS INCLUDING METAL-BODY HIGH PRESSURE PUMP ASSEMBLIES

0014 00

THIS SECTION COVERS:
Replace, Repair

INITIAL SETUP:

Maintenance Level
Field
Tools
Army: General Mechanic's Tool Kit (WP 0037)
Marine Corps: Common No. 1 Tool Set (WP 0037)
References:
Refer to TM 10-4610-309-23P for repair parts information
Personnel Required
Two
Equipment Condition
TWPS removed from service

GENERAL:

This work package contains information and instructions for replacing and repairing components of high pressure pump P-5 or P-6. The procedures in this work package include:

- High Pressure Pump Assembly Replacement
- High Pressure Pump or Motor Replacement
- 1000-Hour High Pressure Pump PMCS
- 2000-Hour High Pressure Pump PMCS
- High Pressure Pump Repair

NOTE

The segmented, composite-body high-pressure pump described in this work package is being replaced by a solid, metal-body high-pressure pump. If you are performing high-pressure pump replacement, 2000-hour high-pressure pump PMCS, or significant high-pressure pump repair on the segmented, composite-body high-pressure pump, replace the pump with the new solid, metal-body pump. See this WP 0014 00 for the new pump replacement procedures.

REPLACE

High Pressure Pump Assembly Replacement:

Parts (TM 10-4610-309-23P):
High Pressure Pump Assembly
Self-Locking Nuts
Motor Terminal Box Cover Gasket
Materials:
Antiseize compound (WP 0038, Table 1, item 3)
Clean, dry, lint-free rags (WP 0038, Table 1, item 39)
Glycerine (WP 0038, Table 1, item 24)
Equipment Condition:
TWPS in standby shutdown (less than four hours) without draining-down.

TACTICAL WATER PURIFICATION SYSTEM (TWPS) **0014 00**
FIELD MAINTENANCE PROCEDURES
HIGH PRESSURE PUMPS INCLUDING METAL-BODY HIGH PRESSURE PUMP ASSEMBLIES

Replace high pressure pump assembly P-5 or P-6 as follows:

WARNING

Electrical hazard. Army personnel: make sure that the generator is off and the TWPS main breaker is off before working on the high-pressure pumps. Marine Corps personnel: make sure that the TWPS is disconnected from its power source before working on the high pressure pumps. Failure to observe this warning could result in serious injury or death from electrical shock.

NOTE
Make sure that all items stored under HP pumps are removed.

1. Make sure that electrical power to the operator control panel has been shut down.
2. Drain the high pressure pumps and the piping to the pumps as follows (see Figure 1):
   a. Open High Pressure Pump Inlet Drain Valve V-214. Close when drained.
   b. Open High Pressure Pump Outlet Drain Valve V-301. Close when drained.
   c. Open High Pressure Pump Case Drain Valve V-215.
   d. Close all three valves when the piping and pumps finish draining.
3. Remove the high pressure pump assembly as follows (see Figure 1):

NOTE
The inner high pressure pump assembly P-6 is more easily removed if the outer pump assembly P-5 is removed first.

   a. Tag the inlet and outlet hoses.
   b. Remove the inlet and outlet hose grooved couplings.
   c. Disconnect the drain hoses from the pump case and the pump mounting flange.
   d. Remove the lubricant return hose from the pump.
   e. Remove the terminal box cover, four caps screws, four washers, and cover gasket.
   f. Tag and disconnect the electrical wiring from the pump motor.
   g. Remove the lock nut inside the terminal box and pull the power cable and box connector out of the box.

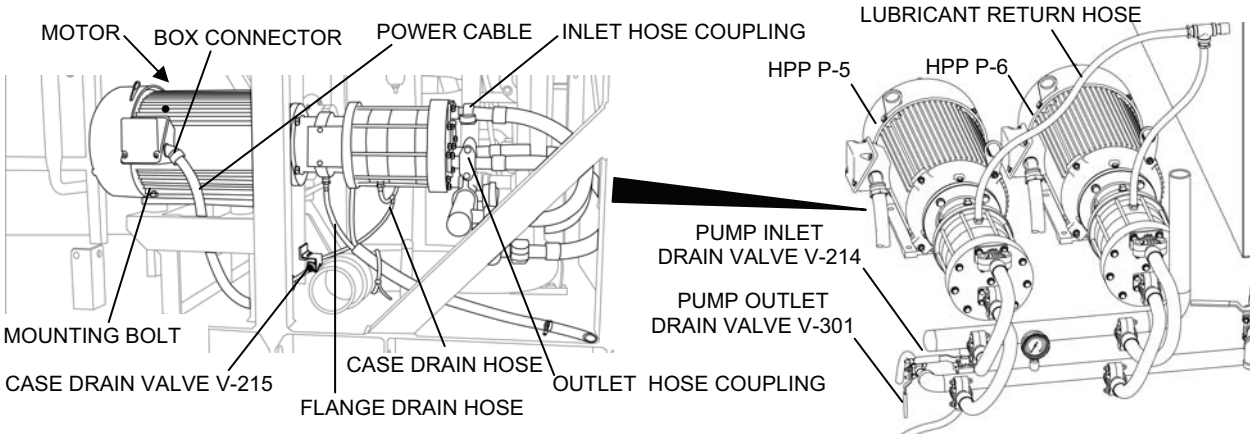

Figure 1. High Pressure Pump Assembly Removal.

WARNING

An appropriate lifting device and two people are required to remove the high pressure pump assembly from its mounting. Do not attempt to lift by hand. Make sure that the pump assembly is properly supported before removing the bolts that secure the assembly to its mounting base. Failure to observe this warning can result in injury to personnel and damage to equipment.

h. Support the pump assembly using an appropriate lifting device.
i. Remove the four mounting bolts, four small washers, four large washers, and four self-locking nuts that secure the pump motor to its mounting pad.
j. Using the lifting device, remove the high pressure pump assembly from its mounting and move to a clean work area.

4. Install the high pressure pump assembly in the TWPS as follows (see Figure 1):

WARNING

An appropriate lifting device and two people are required to install the high pressure pump assembly onto its mounting. Do not attempt to lift by hand. Failure to observe this warning can result in injury to personnel and damage to equipment.

a. Using an appropriate lifting device, move the high-pressure pump assembly onto its mounting pad.
b. Secure the motor to its mounting pad using the four mounting bolts, four small washers, four large washers, and four self-locking nuts removed earlier.
c. Insert the power cable wires and box connector through the hole in the terminal box and secure the connector to the box using the lock nut.
d. Connect the electrical wiring to the motor.
e. Inspect the motor terminal box cover gasket and replace if necessary.
f. Secure the terminal box cover gasket and cover to the box using the four cap screws and washers removed earlier.
g. Connect the pump case drain hose to the pump.
h. Connect the pump flange drain hose to the pump mounting flange.
i. Connect the lubricant return hose to the pump.
j. Connect the inlet and outlet hoses to the proper ports of the pump using the grooved couplings.

5. Perform the Start-Up After a Short Term or Standby Shutdown Without Draining procedures described in WP 0013, TM 4610-309-10.
6. Check for leaks and proper high pressure pump operation.

High Pressure Pump or Motor Replacement:

Parts (TM 10-4610-309-23P):
- High Pressure Pump
- High Pressure Pump Motor
- Self-Locking Nuts

Materials:
- Corrosion preventive compound (WP 0038, Table 1, item 19)
- Clean, dry, lint-free rags (WP 0038, Table 1, item 39)

Equipment Condition:
- TWPS in standby shutdown (less than four hours) without draining-down.

Replace a High Pressure Pump or Motor as follows:

1. Remove the high pressure pump assembly from the TWPS as described in this WP under the headings **High Pressure Pump Assembly Replacement**.
2. Remove the HP Pump from its motor as follows:

CAUTION

Do not turn the high-pressure pump by hand for any reason. Failure to observe this caution may result in serious damage to the pump.

   a. Remove the four bolts and four lock washers that secure the high-pressure pump mounting flange to the motor.
   b. Move the pump back and away from the motor coupling and lay it on a clean work surface.

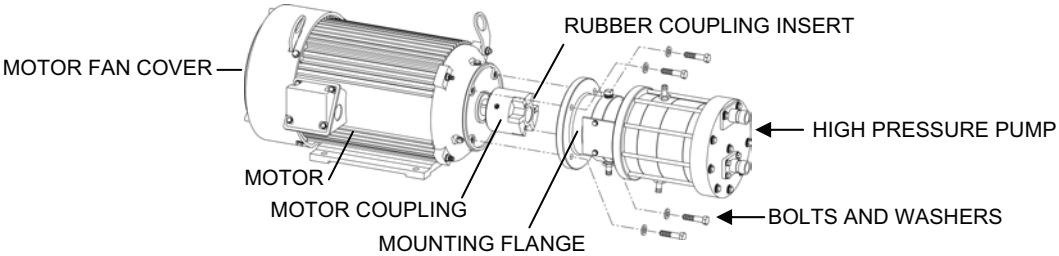

Figure 2. Removing the High Pressure Pump from Its Motor.

3. If replacing the motor, perform the following steps:
   a. Loosen the set screw on the motor coupling and remove the coupling from the shaft.
   b. Remove the motor shaft key.
   c. Apply antiseize compound to the new motor shaft, the coupling, the coupling set screw, and the shaft key.
   d. Install the shaft key and coupling on the motor shaft, but do **NOT** tighten the setscrew.
   e. Clean the pump using clean, lint-free rags.
   f. Inspect the pump for corrosion, especially around the inlet and outlet connections where the grooved couplings mount.
   g. Inspect the grooved coupling gasket and replace if necessary.

4. If replacing the pump, observe the instructions in the NOTE below:

NOTE

The segmented, composite-body high-pressure pump described in this work package is being replaced by a solid, metal-body high-pressure pump. If you plan to replace the segmented, composite-body high-pressure pump, replace the pump with the new solid, metal-body pump. See this WP 0014 00 for the new pump replacement procedures.

5. Install the high-pressure pump on the motor as follows:

CAUTION

Do NOT turn the high-pressure <u>pump</u> shaft by hand for any reason. Turn the <u>motor</u> shaft if it is necessary to align the pump and motor couplings. Failure to observe this caution may result in serious damage to the pump.

   a. Align the motor coupling and rubber coupling insert with the pump coupling as follows:
      1) Remove the four motor fan cover screws and the motor fan cover (see Figure 2).
      2) Turn the fan by hand to rotate and align the motor coupling.
      3) Do **NOT** turn the pump shaft.
   b. Fit the motor coupling and pump coupling together and the pump flange up to the motor.
   c. Secure the flange to the motor using the 4 bolts and 4 lock washers removed earlier.
   d. Do **NOT** tighten the pump coupling set screw at this time. It will be tightened later.
   e. Install the motor fan cover and secure with the 4 screws removed earlier.
6. Install the high pressure pump assembly onto the TWPS as described in this WP under the headings **High Pressure Pump Assembly Replacement**.
7. Before tightening the set screw(s) on the pump coupling, perform the following:
   a. Perform an initial startup as described in WP 0012, TM 10-4610-309-10, through starting the RO feed pumps. (Starting the RO feed pump pressurizes the inlet and outlet of the high-pressure pump and properly position the cam inside the high-pressure pump.)
   b. After both RO feed pumps have started, perform a standby shutdown including deenergizing the Power Distribution Panel (WP 0015, TM 4610-309-10).
   c. Set the gap between the pump and motor coupling jaws to 0.030 in. and tighten the setscrew.
   d. Do not pinch or compress the rubber coupling insert.
   e. Install the pump coupling cover plate.
8. Perform the Start-Up After a Short Term or Standby Shutdown without Draining procedures described in WP 0013, TM 10-4610-309-10 .
9. Check for leaks and proper high pressure pump operation.

SERVICE

1000-Hour High Pressure Pump PMCS:

Parts (TM 10-4610-309-23P):
- Piston Set
- Disc Valve Set
- O-Ring Kit

Materials:
- Glycerin (WP 0038, Table 1, item 24)
- Clean, dry, lint-free rags (WP 0038, Table 1, item 39)

Tools:
- Torque wrench (0-250 in.-lbs.)
- Rubber or Plastic Face Hammer

Equipment Condition:
- TWPS in standby shutdown (less than four hours) without draining-down.

Perform high pressure pump 1000-hour PMCS as follows:

1. Remove the high-pressure pump assembly. Refer to **High Pressure Pump Assembly Replacement.**
2. Remove the pump from its motor. Refer to **High Pressure Pump or Motor Replacement**.
3. Disassemble the high pressure pump as follows:

CAUTION

Do not rotate the high-pressure pump shaft by hand. Rinse all parts as they are removed. Do not scratch or soil any bearing surfaces, metal or plastic. To simplify your work, keep the pump mounted to the flange and work on the pump in the vertical position. Work on the pump in a clean area. Note the orientation of all parts relative to the flange and the motor.

Do not attempt to pry the coupling off the pump shaft. If the coupling does not easily slide off the shaft, remove the coupling using an appropriate tool such as a puller. Failure to observe these cautions may result in serious damage to the pump.

a. Remove the 2 pump mounting flange cover screws and the cover.
b. Loosen the pump coupling set screw and remove the coupling from the pump shaft.

NOTE
Keep the rubber coupling insert with the motor.

c. Leave the pump attached to the mounting flange.
d. Stand the high-pressure pump up on its mounting flange (see Figure 3).
e. Scribe a pencil line down along all segments of the pump and the flange for alignment.
f. Remove the 9 bolts, 9 lock washers, and 9 flat washers around the outer edge of the top of the High Pressure Pump (HPP) manifold.
g. Remove the center hex bolt, lock washer, and flat washer on the top of the HPP manifold.

h. Remove the manifold.

NOTE
Be sure to keep the three O-rings with the manifold.

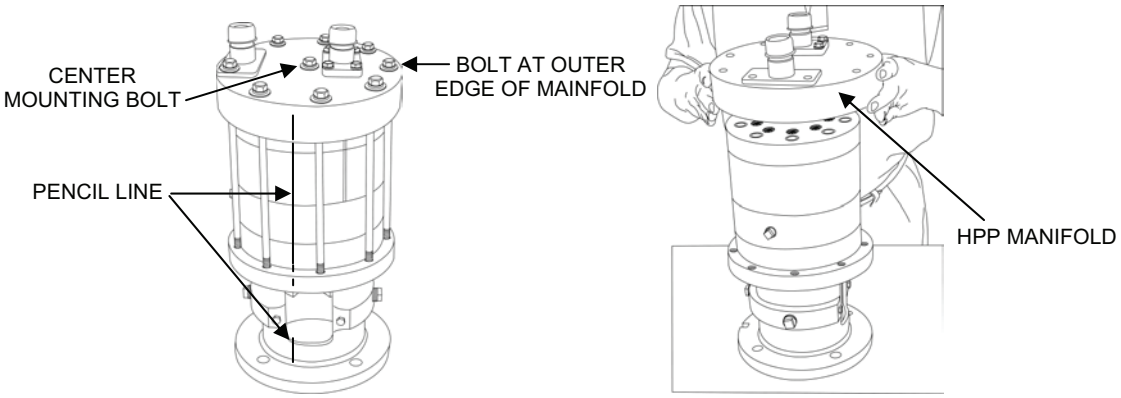

Figure 3. High Pressure Pump Manifold Removal.

i. Remove the valve housing (see Figure 4).

NOTE
If alignment pins cause resistance, gently tap the housing free.

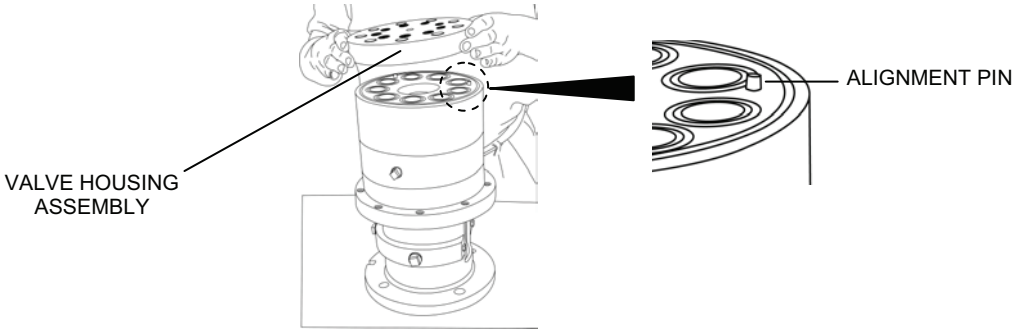

Figure 4. High Pressure Pump Valve Housing Removal.

j. Remove the body (see Figure 5).

NOTE

The body may require gentle tapping upward with a rubber mallet to dislodge it from the cam spacer.

k. Remove the pistons from the piston body.

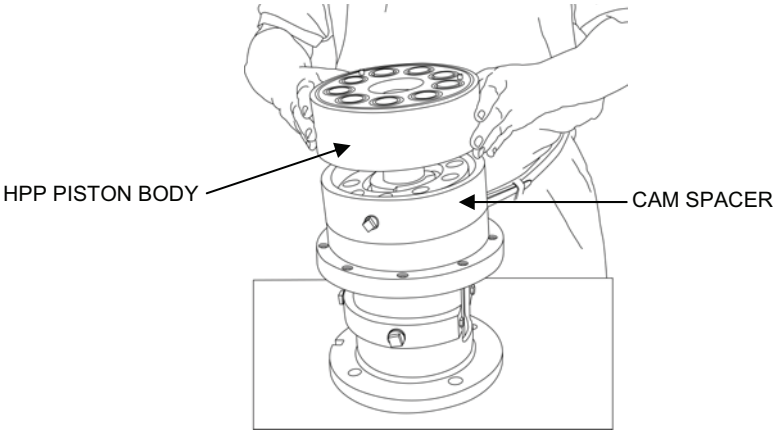

Figure 5. Piston Body Removal.

NOTE

The face of the piston cluster that bears on the cam must be kept clean and free of scratches. Do not place the cam side down; place the cup side downward on the work surface.

l. Remove the piston cluster. Set on the work surface **cam** side up (see Figure 6).

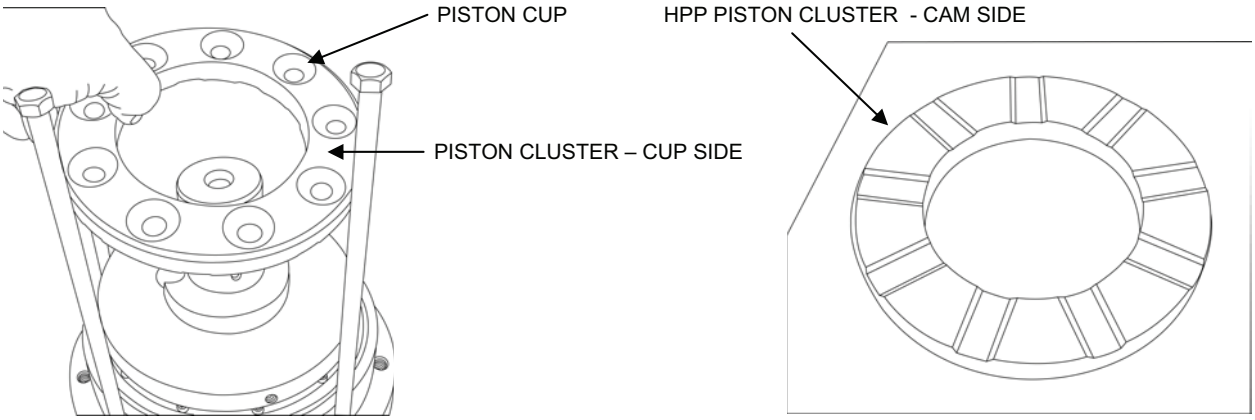

Figure 6. Piston Cluster Removal.

4. Inspect and (if necessary) replace the piston cluster:

NOTE

The piston cluster supports the downward force of the pistons on the rotating cam surface. During the break-in process, the piston cluster is polished-in to match the cam surface. The piston cluster must be replaced if damage and/or wear are discovered.

Damaged bearings may cause damage to the cam surface. Inspect and replace the piston cluster and cam assembly as needed. It is critical during reassembly that the pistons line up properly with the piston cluster.

a. Inspect the piston cluster for wearing and cracking, and replace if necessary.
b. Carefully clean and rinse the piston cluster with fresh water before installing in the pump.
c. Add a drop of glycerin to the piston cluster cup and cam surfaces (see Figure 6).
d. Install the piston cluster onto the camshaft cup side up (see Figure 7).
e. Reinstall the cam spacer making sure to line up the pencil scribe marks.

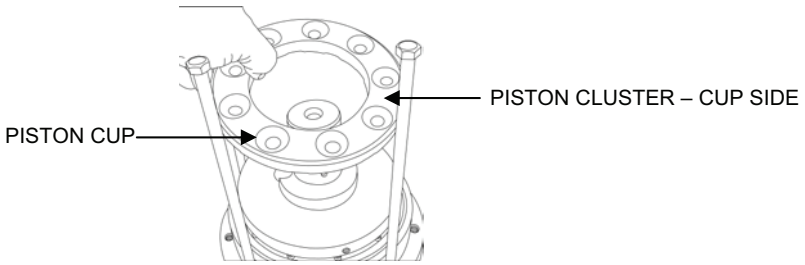

Figure 7. Piston Cluster Installation.

5. Inspect and (if necessary) replace the body (see Figure 8).

NOTE

Inside the pump body are removable, corrosion-resistant, metal cylinder liners. These cylinder liners may need replacement if excessive corrosion and/or wear occur. In addition, a body-bearing supports the camshaft. If the body-bearing is damaged or excessively worn, the bearing will need to be replaced.

a. Inspect the cylinder liners for corrosion. Replace the cylinder liners if needed.

NOTE

Corrosion inside the cylinder liner will cause wear and premature seal and/or piston failure. If abrasives have entered the pump or corrosion has occurred, scoring may be evident.

b. Carefully wipe off any superficial rust/dirt prior to reassembly.
c. Remove and replace O-rings.

d. Inspect the body bearing for wear or damage. If damaged, replace the body bearing. Refer to **High Pressure Pump Repair.**

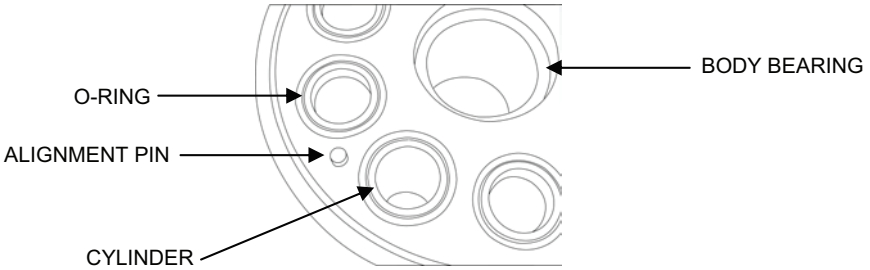

Figure 8. Piston Body Inspection.

6. Discard the old piston assemblies and install the new piston assemblies from the kit except for two, one from each side into the body.
   a. Replace old O-rings on the piston body. Use a little glycerin to hold the O-rings in place.
   b. Apply glycerin to the body bearing and install the piston body on the cam spacer making sure to line up the pencil scribe marks (see Figure 9).

NOTE
Make sure that the pistons line up with the cups in the piston cluster.

   c. Install the last two pistons.
   d. Push all the pistons down into the piston cluster as far as they will go.

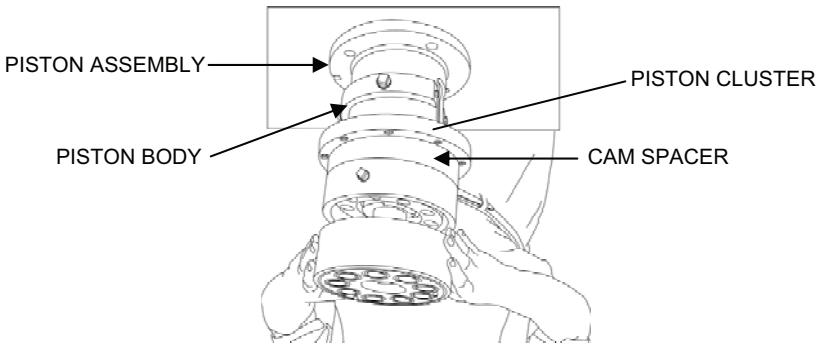

Figure 9. Piston Body Assembly Installation.

CAUTION

Once the pistons are set into the cluster do NOT turn the high-pressure pump shaft (cam shaft) for any reason. Failure to observe this caution may result in serious damage to the pump when it is started up.

NOTE

The valve housing contains pairs of disk check valves above each piston to rectify the flow through the pump. The failure of a valve will drastically affect the performance of the pump.

The disk check valves can be easily removed from the valve housing by inserting a narrow rod through the holes in the bottom of the valve housing and pushing the valves out the top of the housing.

7. Remove and discard the old disk check valves from the valve housing (see Figure 10).

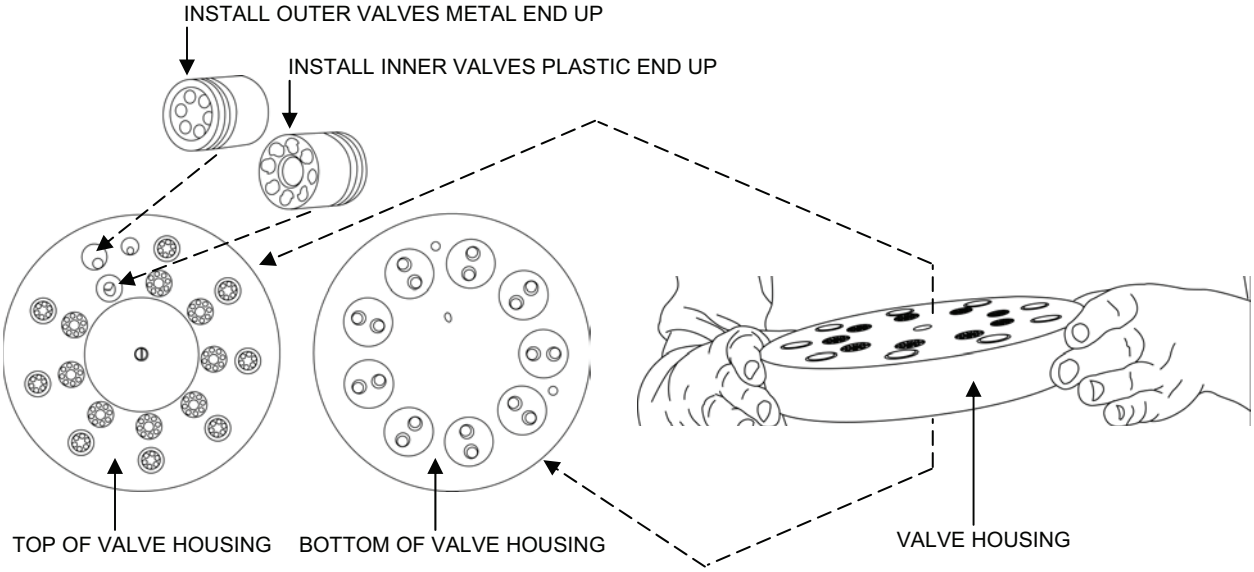

Figure 10. Disk Check Valve Replacement.

8. Inspect the valve housing for any cracks, de-lamination or damage. Replace the valve housing assembly if any de-lamination or obvious damage is visible.
9. Install new pairs of valves into the valve housing from the kit as follows (see Figure 11):

NOTE

If a valve does not easily push in flush with the valve housing, place a soft, flat material, such as a small, flat piece of wood over the valve and gently tap the wood until the valve is fully inserted and the top is flush with the surface of the valve housing. Do not tap directly on the valve.

a. Install the outer valves into the holes plastic end first so that the metal end of the valve faces up.
b. Install the inner valves into the holes metal end first so that the plastic end of the valve faces up.
c. Make sure that the top surface of the valves is flush with the surface of the valve housing.

10. Mount the valve housing onto the piston body (see Figure 11).

NOTE
Alignment pins on the piston body help align the valve housing to the body.

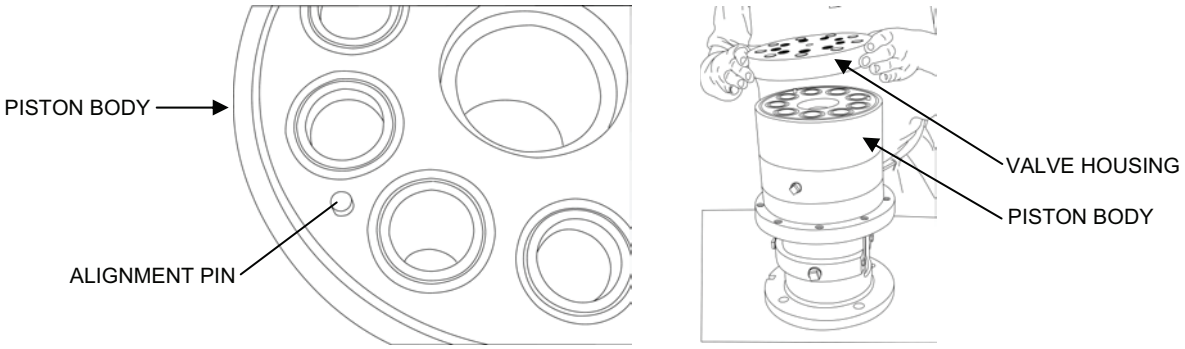

Figure 11. Valve Housing Assembly Installation.

11. Inspect and (if necessary) replace the manifold (see Figure 12).

NOTE
The manifold permits fluid transfer from the inlet port to the valves and again from the valves to the outlet port. The inner of the two manifold channels carries high-pressure fluid to the outlet port from the check valves. The outer channel carries low-pressure fluid from the inlet port to the check valves.

a. Inspect all ports, fittings, and threads for deterioration or damage.
b. Remove and discard O-rings.
c. Inspect all O-ring grooves for scratches, deterioration, or signs of leakage.
d. Inspect the manifold channels. If any de-lamination or structural cracks are present on the manifold's channels (annular grooves), O-ring grooves, or ports, the manifold must be replaced.
e. Inspect inlet and outlet nipples for damage, wear, or corrosion. Replace as needed.
f. Install new O-rings.

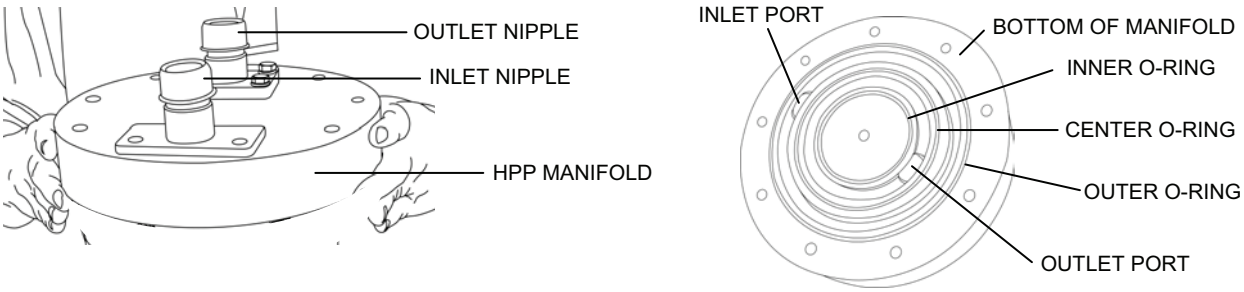

Figure 12. HPP Manifold Inspection.

12. Install the manifold to the top of the valve housing (see Figure 13).

NOTE
Make sure that the manifold is centered and lined up with the pencil scribe marks.

a. Install and torque the center mounting bolt, lock washer, and flat washer to 150 in.-lbs.
b. Install the 9 bolts, 9 lock washers, and 9 flat washers at the outer diameter of the manifold. Torque the bolts to 150 in.-lbs. in the sequence shown in Figure 13.

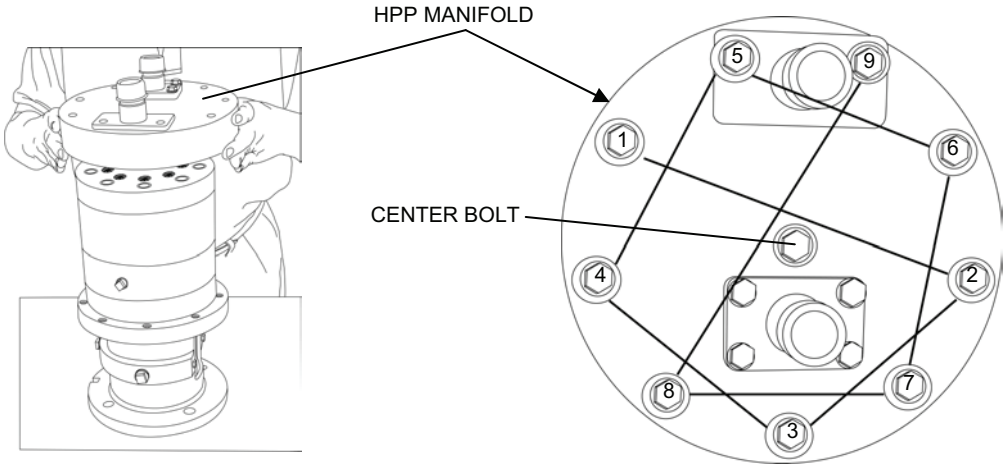

Figure 13. HPP Manifold Installation and Bolt Torque Sequence.

13. Install the high-pressure pump onto the motor. Refer to **High Pressure Pump or Motor Replacement**.
14. Install the high-pressure pump assembly onto the TWPS. Refer to **High Pressure Pump Assembly Replacement**.
15. Perform the Start-Up After a Short Term or Standby Shutdown Without Draining procedures described in WP 0013, TM 10-4610-309-10.
16. Check for leaks and proper high pressure pump operation.

2000 Hour High-Pressure Pump PMCS:

NOTE
The segmented, composite-body high-pressure pump described in this work package is being replaced by a solid, metal-body high-pressure pump. If you plan to perform 2000-hour high-pressure pump PMCS on the segmented, composite-body high-pressure pump, replace the pump with the new solid, metal-body pump. See this WP 0014 00 for the new pump replacement procedures.

High Pressure Pump Repair:

NOTE

The segmented, composite-body high-pressure pump described in this work package is being replaced by a solid, metal-body high-pressure pump. If you plan to perform significant repairs to the segmented, composite-body high-pressure pump, replace the pump with the new solid, metal-body pump. See this WP 0014 00 for the new pump replacement procedures.

METAL-BODY HIGH-PRESSURE PUMP ASSEMBLIES

THIS SECTION COVERS:

Replace, Repair

INITIAL SETUP:

Maintenance Level
Field
Tools
Army: General Mechanic's Tool Kit (WP 0037)
Marine Corps: Common No. 1 Tool Set (WP 0037)
Both: Tool Set, Pump Maintenance (WP 0037) (for pump PMCS)
References:
Refer to TM 10-4610-309-23P for repair parts information
Personnel Required
Two
Equipment Condition
TWPS removed from service

GENERAL:

This work package contains information and instructions for replacing and repairing the metal-body high-pressure pump/motor assemblies P-5 and P-6 used in newer TWPS units. The procedures in this work package include:

- Replace a pump assembly
- Replace a pump motor
- Replace a metal-body pump
- Replace a composite-body pump with a metal-body pump
- Repair/Service 6000-hour metal-body pump PMCS

REPLACE

Replace a Pump Assembly:

Parts (TM 10-4610-309-23P):
Metal-Body High-Pressure Pump Assembly
Self-Locking Nuts
Motor Terminal Box Cover Gasket
Materials:
Antiseize compound (WP 0038, Table 1, item 3)
Clean, dry, lint-free rags (WP 0038, Table 1, item 39)
Equipment Condition:
TWPS in standby shutdown (less than four hours) with drain-down

Replace metal-body high-pressure pump assembly P-5 or P-6 as follows:

WARNING

Electrical hazard. Army personnel: make sure the generator and the TWPS main breaker are off before working on the high-pressure pump assemblies. Marine Corps personnel: make sure the TWPS is disconnected from its power source before working on the high-pressure pump assemblies. Failure to observe this warning could result in serious injury or death from electrical shock.

NOTE
Make sure all items stored under the high-pressure pumps are removed.

1. Make sure that electrical power to the operator control panel has been shut down.
2. Drain the high-pressure pumps and the piping to the pumps as follows (see Figure 1):
   a. Open High-Pressure Pump Inlet Drain Valve V-214. Close when drained.
   b. Open High-Pressure Pump Outlet Drain Valve V-301. Close when drained.
   c. Open High-Pressure Pump Case Drain Valve V-215.
   d. Close all three valves when the piping and pumps finish draining.
3. Remove the metal-body high-pressure pump assembly as follows (see Figure 1):

NOTE
The inner metal-body high-pressure pump assembly P-6 is more easily removed if the outer pump assembly P-5 is removed first.

   e. Tag the inlet and outlet hoses.
   f. Remove the inlet and outlet hose grooved couplings.
   g. Disconnect the pump case drain hose from the pump case.
   h. Remove the lubricant return hose from the pump.
   i. Remove the terminal box cover, four caps screws, four washers, and cover gasket.
   j. Tag and disconnect the electrical wiring from the motor.
   k. Remove the lock nut inside the terminal box and pull the power cable and box connector out of the box.

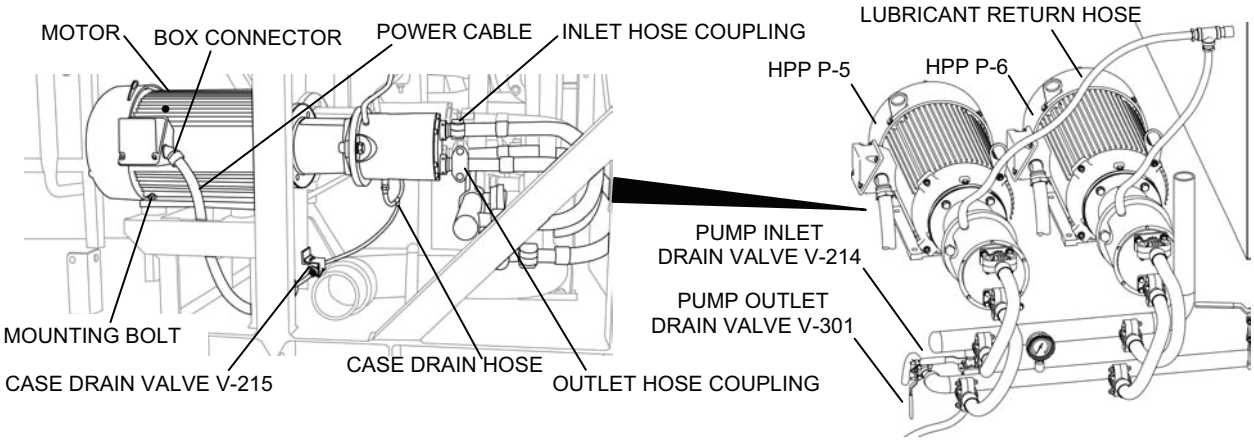

Figure 1. Metal-Body High-Pressure Pump/Motor Assembly Removal.

WARNING

An appropriate lifting device and two people are required to remove the metal-body high-pressure pump assembly from its mounting. Do not attempt to lift by hand. Make sure that the pump assembly is properly supported before removing the bolts that secure the assembly to its mounting base. Failure to observe this warning can result in injury to personnel and damage to equipment.

l. Support the pump assembly using an appropriate lifting device.
m. Remove the four mounting bolts, four small washers, four large washers, and four self-locking nuts that secure the pump assembly motor to its mounting pad.
n. Using the lifting device, remove the metal-body high-pressure pump assembly from its mounting and move to a clean work area.

4. Install the metal-body high-pressure pump assembly in the TWPS as follows (see Figure 1):

WARNING

An appropriate lifting device and two people are required to install the metal-body high-pressure pump assembly onto its mounting. Do not attempt to lift by hand. Failure to observe this warning can result in injury to personnel and damage to equipment.

k. Using an appropriate lifting device, move the metal-body high-pressure pump assembly onto its mounting pad.
l. Secure the motor to its mounting pad using the four mounting bolts, four small washers, four large washers, and four self-locking nuts removed earlier.
m. Insert the power cable wires and box connector through the hole in the terminal box and secure the connector to the box using the lock nut.
n. Connect the electrical wiring to the motor.
o. Inspect the motor terminal box cover gasket and replace if necessary.
p. Secure the terminal box cover gasket and cover to the box using the four cap screws and washers removed earlier.

NOTE

The metal-body high-pressure pump shaft seal is designed to prevent water seepage from the pump, unlike the composite-body high-pressure pump seal that may allow some seepage. Therefore, the pump flange drain hoses are not required with the metal-body high-pressure pump assembly. The pump case drain hose and the pump lubricant return hose are still used.

q. Connect the pump case drain hose to the pump.
r. Connect the lubricant return hose to the pump.
s. Connect the inlet and outlet hoses to the proper ports of the pump using the grooved couplings.

5. Perform the Initial Start-Up or Start-Up With The System Fully Drained procedures described in WP 0012, TM 10-4610-309-10.
6. Check for leaks and proper metal-body high-pressure pump assembly operation.

Replace a Pump Motor:

Parts (TM 10-4610-309-23P):
- Motor
- Insert, Coupling, Flexible

Materials:
- Antiseize compound (WP 0038, Table 1, item 3)
- Corrosion preventive compound (WP 0038, Table 1, item 19)
- Clean, dry, lint-free rags (WP 0038, Table 1, item 39)

Equipment Condition:
- TWPS in standby shutdown (less than four hours) with drain-down.

Replace a metal-body high-pressure pump motor as follows:

1. Remove the pump assembly from the TWPS as described earlier in this WP under the heading **Replace a Pump Assembly**.
2. Remove the motor as follows (see Figure 2):

NOTE

Unlike the original composite-body high-pressure pumps, the metal-body pumps can be turned by hand without causing damage to the pump.

c. Remove the mounting flange cover plate.
d. Remove the four bolts and four lock washers that secure the pump mounting flange and pump to the motor.
e. Pull the flange/pump assembly off the motor coupling and lay on a clean work surface.

CAUTION

Do not pry the coupling off the motor shaft. If it does not easily slide off the shaft, remove the coupling using an appropriate tool such as a puller. Failure to observe this cautions may result in serious damage to the motor.

f. Loosen the set screw on the motor coupling and remove the coupling, rubber coupling insert, and motor shaft key.
g. Inspect the rubber coupling insert for damage. Replace if needed.

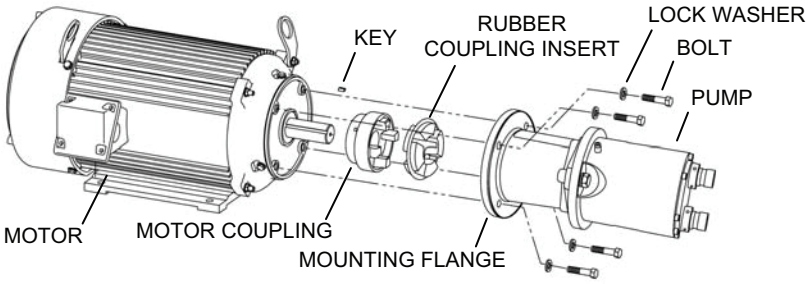

Figure 14. Removing the Motor.

3. Inspect the pump for corrosion, especially around the inlet and outlet connections.
4. Clean the pump using clean, lint-free rags.
5. Inspect the grooved coupling gaskets for the pump inlet and outlet connections and replace if necessary.
6. Install the mounting flange/pump assembly on the new motor as follows:
   a. Apply antiseize compound to the new motor shaft, the inner diameter of the motor coupling, the coupling set screw, and the shaft key.
   b. Install the shaft key, motor coupling, and rubber coupling insert on the motor shaft. Slide the coupling on just far enough that the shaft does not stick out.
   c. Rotate the motor as required so the coupling setscrew is accessible through the opening in the side of the mounting flange. Do not tighten the coupling set screw.
   d. Position the pump with the inlet (stamped “I” on the port flange) at the top and the outlet (stamped “O” on the port flange) at the bottom (see Figure 15).
   e. Assemble the mounting flange/pump assembly to the motor, ensuring that the pump and motor coupling halves align and fit together. Rotate the pump as necessary for alignment.
   f. Secure mounting flange to motor using 4 bolts and 4 lock washers removed earlier.
   g. Check that there is a 0.012 in. (3mm) gap between the motor and the pump couplings (see fig. 15). Move the motor coupling as necessary to check that the coupling insert is not pinched or compressed.
   h. Tighten the motor coupling setscrew.
   i. Reinstall the mounting flange cover plate.

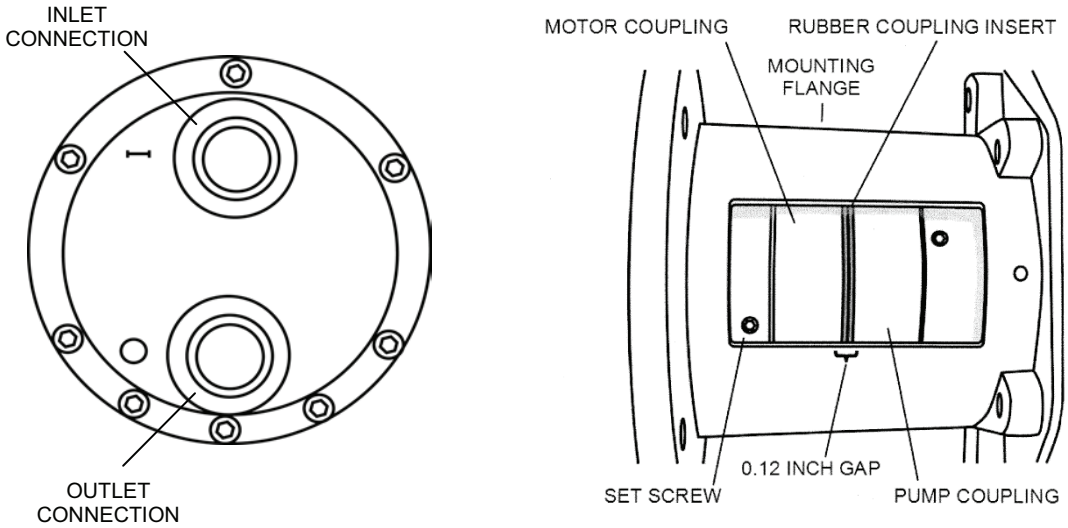

Figure 15. Pump Inlet and Outlet Connections.

7. Install the metal-body high-pressure pump assembly onto the TWPS as described in this WP under the heading **Replace a Pump Assembly**.
8. Perform the Initial Start-Up or Start-Up With The System Fully Drained procedures described in WP 0012, TM 10-4610-309-10.
9. Check for leaks and proper pump/motor operation.

Replace a Metal-body Pump:

Parts (TM 10-4610-309-23P):
- Metal-body Pump
- Insert, Coupling, Flexible
- Lock Washers

Materials:
- Antiseize compound (WP 0038, Table 1, item 3)
- Corrosion preventive compound (WP 0038, Table 1, item 19)
- Clean, dry, lint-free rags (WP 0038, Table 1, item 39)

Equipment Condition:
- TWPS in standby shutdown (less than four hours) with drain-down.

Replace a metal-body pump as follows:

1. Make sure that electrical power to the operator control panel has been shut down.
2. Drain the metal-body pumps and the piping to the pumps as follows (see Figure 16):
   o. Open High-Pressure Pump Inlet Drain Valve V-214. Close when drained.
   p. Open High-Pressure Pump Outlet Drain Valve V-301. Close when drained.
   q. Open High-Pressure Pump Case Drain Valve V-215.
   r. Close all three valves when the piping and pumps finish draining.
3. Disconnect the hoses from the metal-body pump as follows (see Figure 16):
   a. Tag the inlet and outlet hoses.
   b. Remove the inlet and outlet hose grooved couplings.
   c. Disconnect the pump case drain hose from the pump case.
   d. Disconnect the lubricant return hose from the pump case.

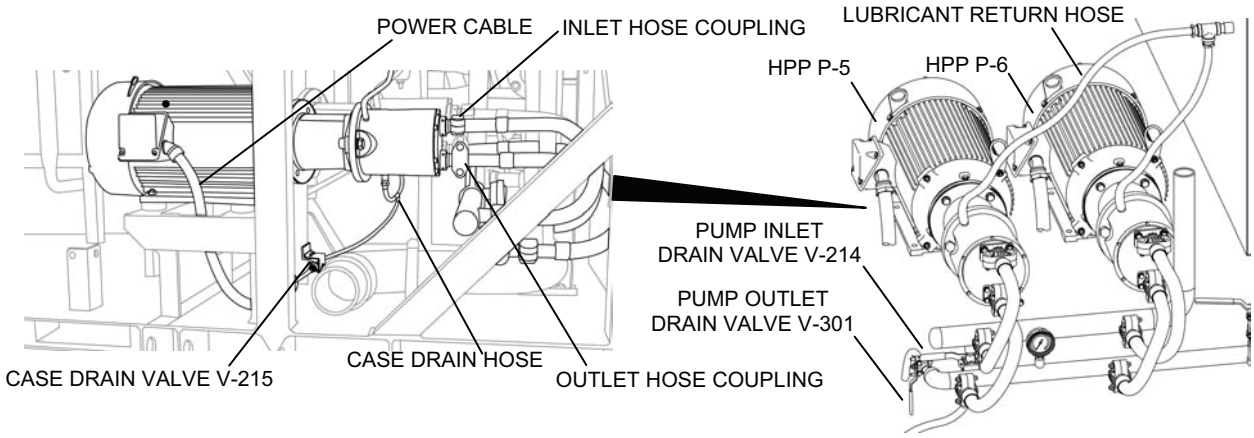

Figure 16. Disconnecting Hoses from Metal-Body High-Pressure Pump.

4. Remove the metal-body pump from the mounting flange as follows (see Figure 17):

WARNING

The metal-body pump weighs about 70.5 lb (32 kg). An appropriate lifting device and two people are required to lift the metal-body pump. Do not attempt to lift by hand. Failure to observe this warning can result in injury to personnel and damage to equipment.

NOTE

Unlike the composite-body high-pressure pumps, the metal-body pumps can be turned by hand without causing damage to the pump.

a. Remove the mounting flange cover plate.
b. While supporting the pump, remove the 2 bolts and 2 lock washers that secure the pump to the mounting flange.
c. While supporting the pump, carefully pull the pump off the motor coupling and flange and set aside.

CAUTION

Do not pry the coupling off the pump shaft. If it does not easily slide off the shaft, remove the coupling using an appropriate tool such as a puller. Failure to observe this caution may result in serious damage to the pump.

d. Loosen the set screw on the pump coupling and remove the coupling, rubber coupling insert, and key from the shaft.
e. Inspect the rubber coupling insert for damage and replace if necessary.

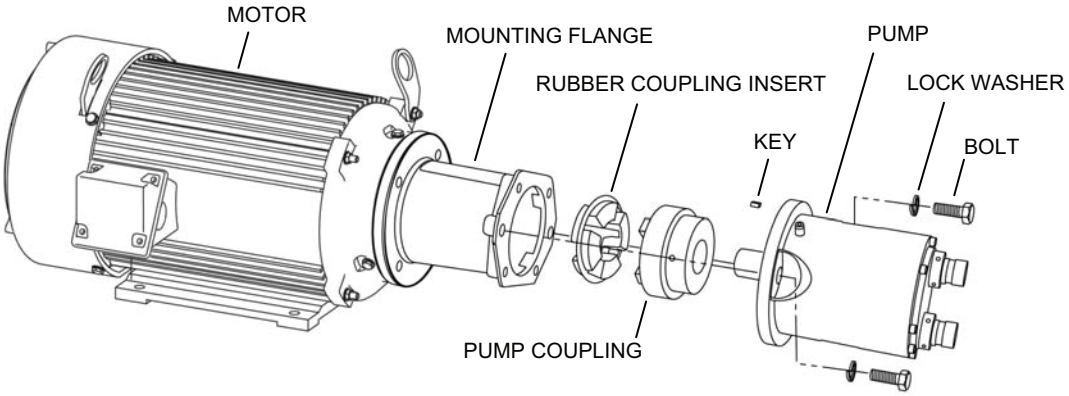

Figure 17. Removing Metal-Body High-Pressure Pump from Mounting Flange.

5. Clean and inspect the motor for corrosion and damage.
6. Inspect the grooved coupling gaskets for the pump inlet and outlet connections and replace if necessary.
7. Prepare the new pump as follows (see Figure 18):

CAUTION

Potential pump damage. Do not use pipe tape or sealant on adapter and port threads. If tape particles or sealant get into the pump it may damage the pump.

a. Install the O-rings on the inlet and outlet port connections and straight adapters (the connections and adapters are packaged loose with the new pump).

b. Install the new port connections and adapters onto the new pump. Use the spanner wrench from the pump maintenance tool set (WP 0037) to install the port connections.

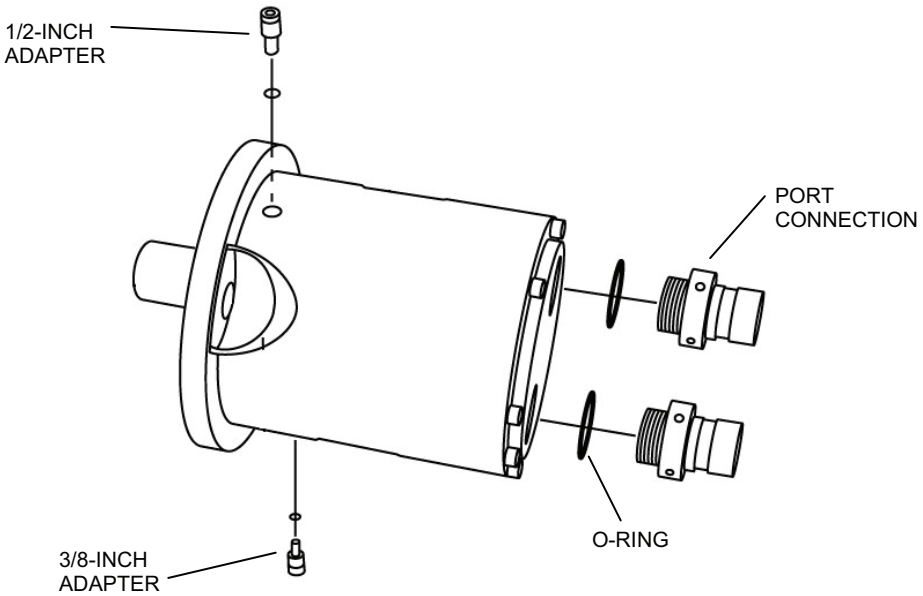

Figure 18. New Pump Port Connections and Adapters.

8. Install the new pump on the motor/flange assembly as follows:
   a. Apply antiseize compound to the new pump shaft, the pump coupling, the coupling set screw, and the shaft key.
   b. Install the shaft key, pump coupling, and rubber coupling insert on the pump shaft. Push the coupling down until it rests on the shoulder at the bottom of the shaft.
   c. Rotate the motor so the motor coupling set screw is accessible through the opening in the side of the mounting flange. Loosen the set screw and slide the coupling outward to the end of the motor shaft. Do not tighten the set screw.
   d. Position the pump with the inlet (stamped “I” on the port flange) at the top and the outlet (stamped “O” on the port flange) at the bottom (see Figure 19).
   e. Assemble the pump to the motor/flange assembly, ensuring that the pump and motor couplings align and fit together.
   f. Secure the pump to the flange using the 2 bolts and 2 lock washers removed earlier.
   g. Check that there is a 0.12 in. (3mm) gap between the motor and pump couplings (see fig. 19). Move the motor coupling as necessary to check that the coupling insert is not pinched or compressed.
   h. Tighten the motor coupling set screw.
   i. Reinstall the mounting flange cover plate.

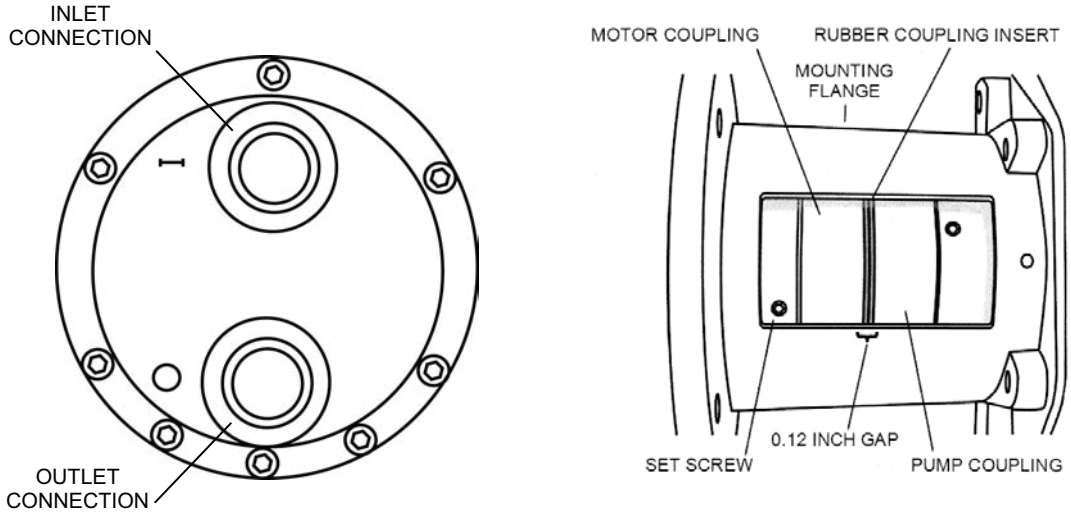

Figure 19. Pump Inlet and Outlet Connections.

9. Install the metal-body high pressure pump assembly onto the TWPS as described earlier in this WP under the heading. **Replace a Pump Assembly.**
10. Perform the Initial Start-Up or Start-Up With The System Fully Drained procedures described in WP 0012, TM 10-4610-309-10.
11. Check for leaks and proper pump/motor operation.

Replace a Composite-body Pump with a Metal-body Pump:

Parts (TM 10-4610-309-23P):
- Metal-body Pump (WP 0025, Figure 45, item 73)
- Adapter, Motor, with hardware (WP 0025, Figure 45, items 68 thru 72)
- Coupling Half, Motor Shaft (WP 0025, Figure 45, item 65)
- Key, Machine (WP 0025, Figure 45, item 64)
- Insert, Coupling, Flexible (WP 0025, Figure 45, item 66)
- Coupling Half, Pump Shaft (WP 0025, Figure 45, item 67)
- Preprogrammed Memory Module (WP 0049, Figure 76, item 1)
- Self-Locking Nuts

Materials:
- Antiseize compound (WP 0038, Table 1, item 3)
- Corrosion preventive compound (WP 0038, Table 1, item 19)
- Clean, dry, lint-free rags (WP 0038, Table 1, item 39)

Equipment Condition:
- TWPS in standby shutdown (less than four hours) with drain-down.

NOTE

When replacing a composite-body pump with a metal-body pump, it is also necessary to replace the preprogrammed memory module in the PLC.

Replace a composite-body pump with a metal-body pump as follows:

1. Remove the composite-body high-pressure pump assembly from the TWPS as described in (WP 0014 00) under the heading **High Pressure Pump Assembly Replacement**.
2. Remove the pump and mounting flange from the motor by removing the four attaching bolts and lock washers.
3. Loosen the motor coupling set screw. Remove and discard the coupling half and key from the motor shaft.
4. Attach the new adapter to the motor using the four bolts and lock washers included with it.
5. Prepare and install the metal-body pump as described earlier in this WP under the heading **Replace a Metal-body Pump**.
6. Reinstall the pump assembly onto the TWPS as described earlier in this WP under the heading **Replace a Pump Assembly**.
7. Replace the preprogrammed memory module in the PLC as described in (WP 0021) under the heading **PLC Processor Module and Memory Module Replacement**.
8. Perform the Initial Start-Up or Start-Up With The System Fully Drained procedures described in WP 0012, TM 10-4610-309-10.
9. Check for leaks and proper pump/motor operation.

REPAIR/ SERVICE

6000-Hour Pump PMCS:

Parts (TM 10-4610-309-23P):
Kit: Shaft Seal, O-Rings, and Spare Parts
Kit: 6000-Hour Service
Materials:
Antiseize compound (WP 0038, Table 1, item 3)
Clean, dry, lint-free rags (WP 0038, Table 1, item 39)
Glycerin (WP 0038, Table 1, item 24)
Tools:
Hex key (6 mm)
Socket (10 mm)
Screwdriver, flat tip
Tool Set, Shaft Seal Replacement consisting of:
- Assembly tool
- Hollow bushing
- Retaining ring tool
- Shaft seal extractor
- Spanner wrench

Equipment Condition:
TWPS in standby shutdown (less than four hours) with drain-down.

NOTE

For the 6000-hour PMCS, all parts included in the two kits identified above will be replaced regardless of their condition. Additional parts, identified in the following steps, will be inspected and replaced only as required. Damage or excessive wear of the pump casing or cylinder barrel requires replacement of the entire pump.

Perform Metal-Body High-Pressure Pump Assembly 6000-hour PMCS as follows:

1. Remove the pump from the motor/mounting flange assembly as described earlier in this WP under the heading **Pump Replacement**.
2. Clean the mounting flange and pump shaft with a soft bristle brush and soapy water.
3. Disassemble the metal-body pump as follows:
   a. Remove and retain the two straight adapters on the pump casing (see Figure 20). Remove and discard the O-rings on the adapters.
   b. Remove and retain the two port connections on the pump port flange (see Figure 20). Remove and discard the O-rings on the connections.

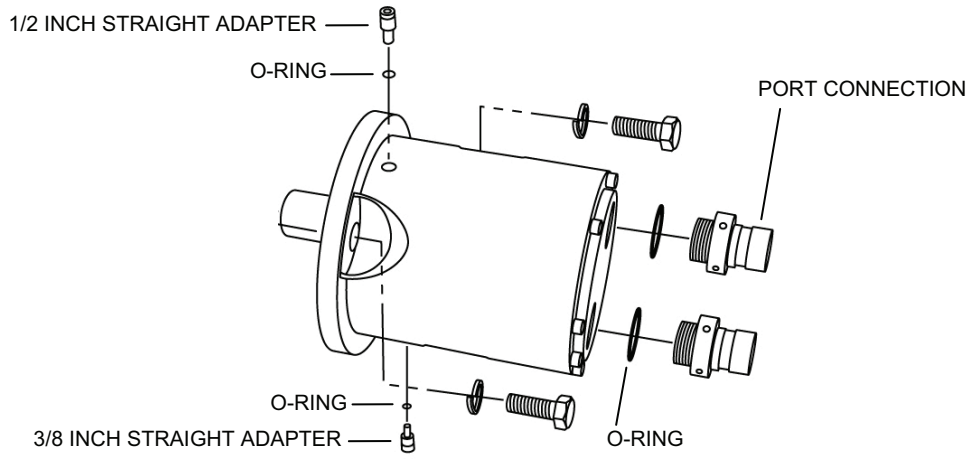

Figure 20. Pump Straight Adapters and Port Connections.

NOTE

Unlike the composite-body high-pressure pumps, the metal-body pumps can be turned by hand without causing damage to the pump.

c. If the key is still in the shaft, remove the key.
d. Using the retaining ring tool, unscrew the seal-retaining ring counterclockwise and remove it (see Figure 21).

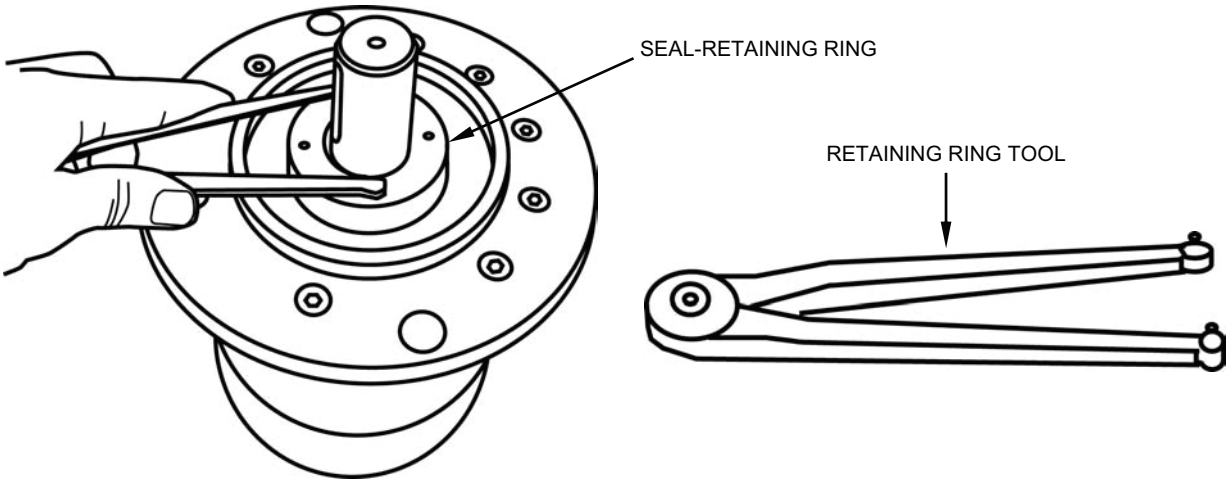

Figure 21. Removing Seal-Retaining Ring.

e. Remove the eight hex-head screws from the mounting flange (see Figure 22).
f. Carefully remove the mounting flange from the pump casing and lay it on a clean surface with the swash plate facing up.

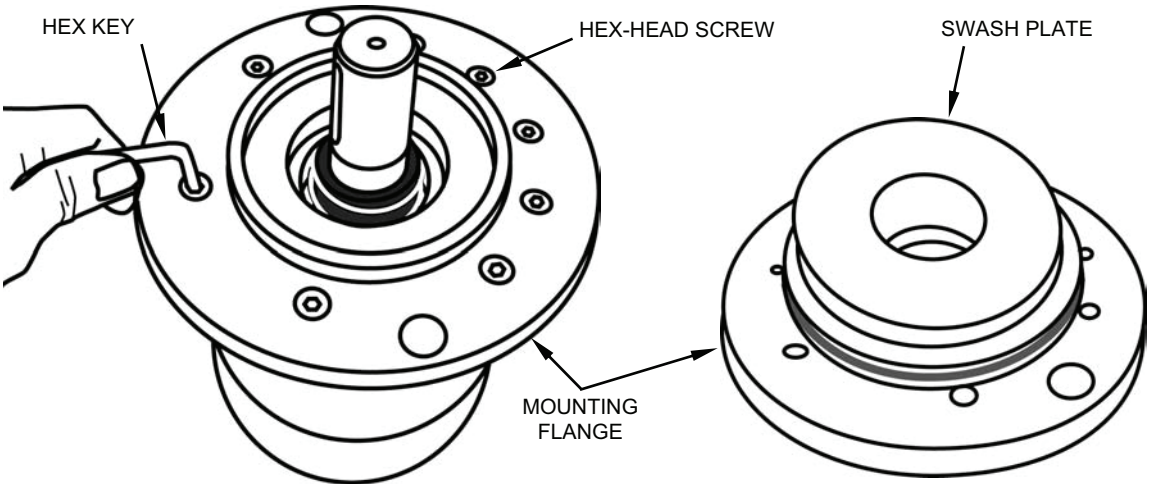

Figure 22. Removing Hex-Head Screws from Mounting Flange.

g. Remove and retain the guide pin from the pump casing or the mounting flange (see Figure 23). (If the pin is not in the pump casing, it may have come out with the mounting flange.)
h. Wet the pump shaft and shaft seal with glycerin (see Figure 23).

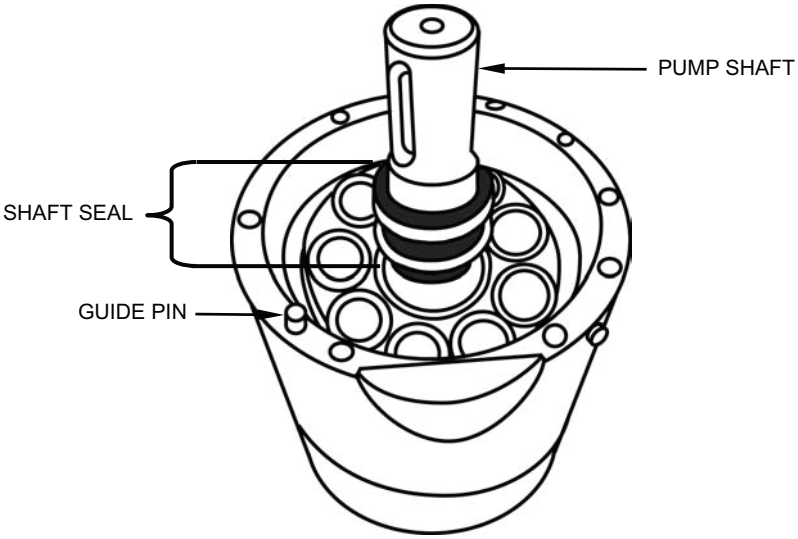

Figure 23. Mounting Flange Removed from Pump.

i. Position the prongs of the shaft seal extractor under the shaft seal and remove the shaft seal (see Figure 24).
j. Lift the stop bushing off the pump shaft (see Figure 24).

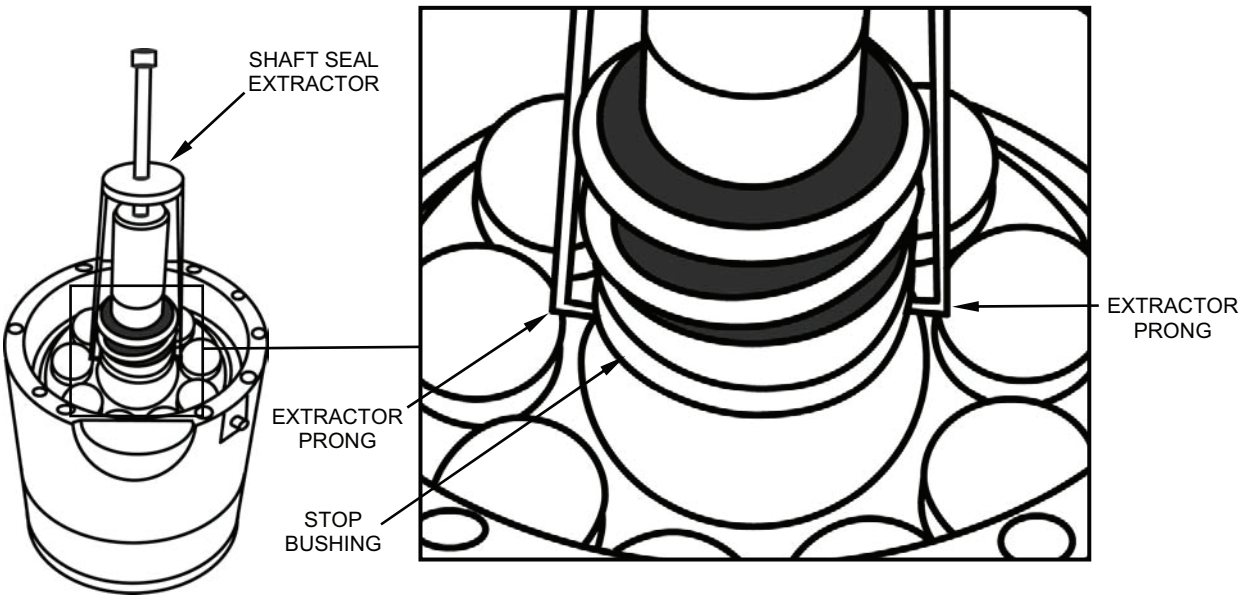

Figure 24. Removing Shaft Seal and Stop Bushing.

k. Remove the cylinder barrel from the pump casing (see Figure 25). Place on a clean surface.
l. Tilt the pump casing and let the port plate fall out into your hand.
m. Remove and retain the guide pin and center pin from the bottom of the pump casing. If either pin is not in the casing, it may have come out with the port plate.
n. Inspect the bearing surfaces inside the casing and the outer surfaces of the cylinder barrel for scouring or excessive wear. Replace the entire pump if scouring or excessive wear is found.

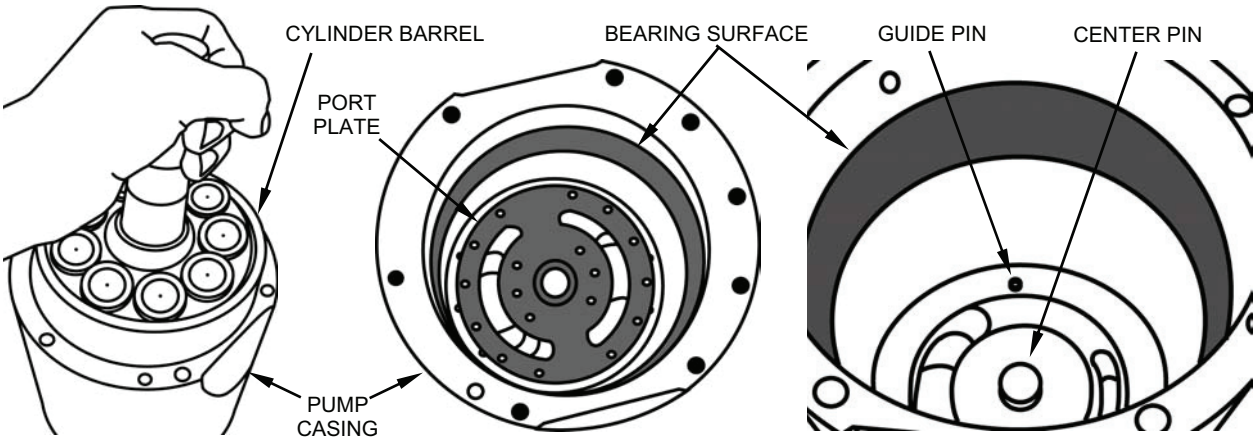

Figure 25. Removing Cylinder Barrel from Pump Casing.

o. Tilt the barrel down at the shaft end and slide the retaining plate and pistons out of the barrel (see Figure 26).

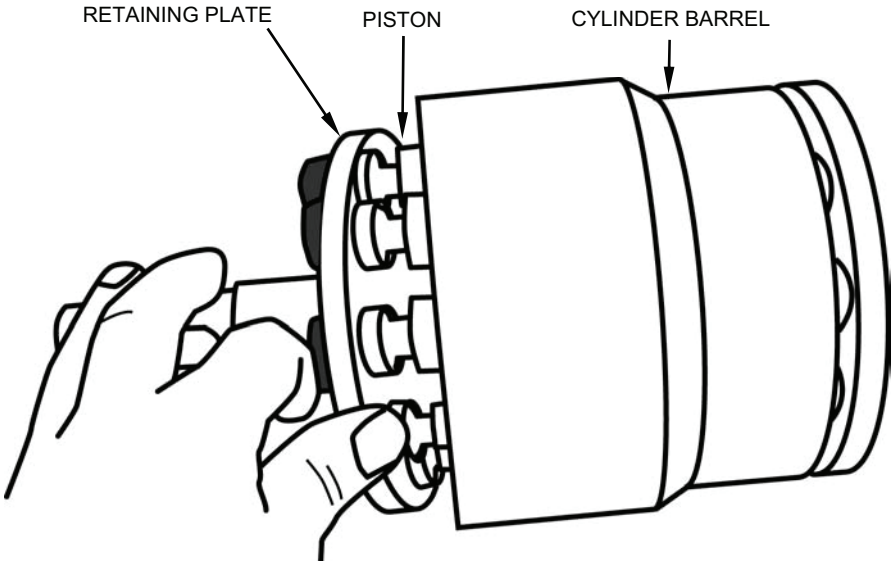

Figure 26. Removing Retaining Plate and Pistons from Cylinder Barrel.

p. Lift the retaining ball off the pump shaft (see Figure 27).
q. Inspect the piston bores for scouring or excessive wear. Replace the entire pump if scouring or excessive wear is found.

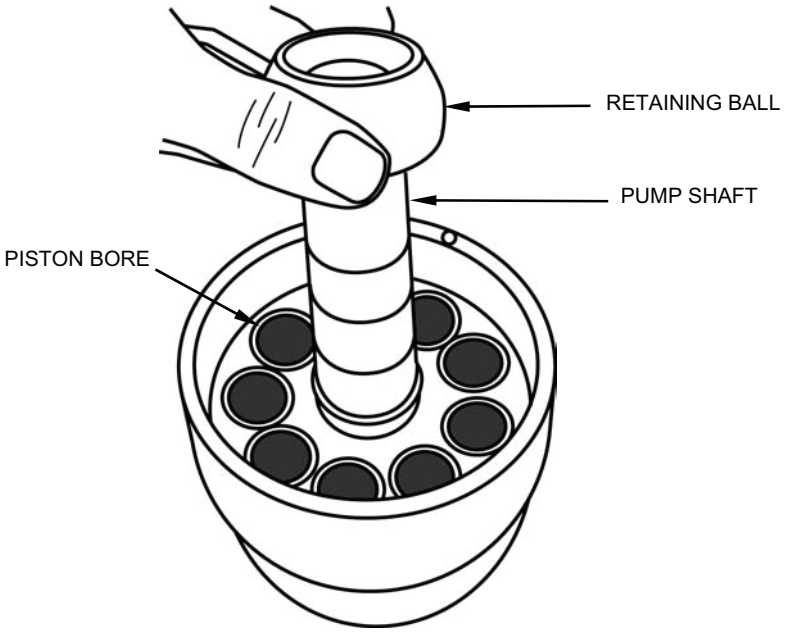

Figure 27. Removing Retaining Ball from Pump Shaft.

r. Using a flat tip screwdriver, carefully pry the valve plate assembly off the cylinder barrel (see Figure 28).

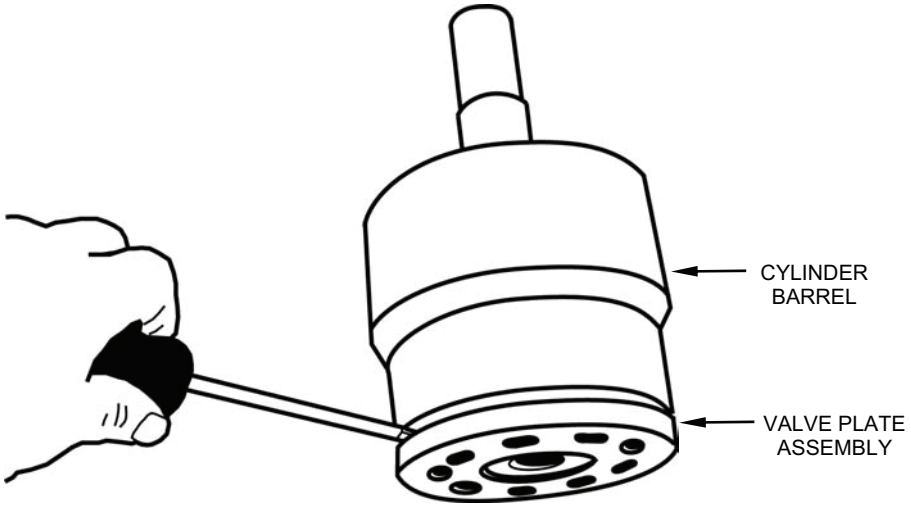

Figure 28. Removing Valve Plate Assembly from Cylinder Barrel.

4. Inspect the following parts for wear or damage and replace as required (see Figure 29):
   - Straight adapters
   - Swash plate
   - Spacer
   - Retaining ball
   - Mounting flange
   - Seal retaining ring
   - Port connections

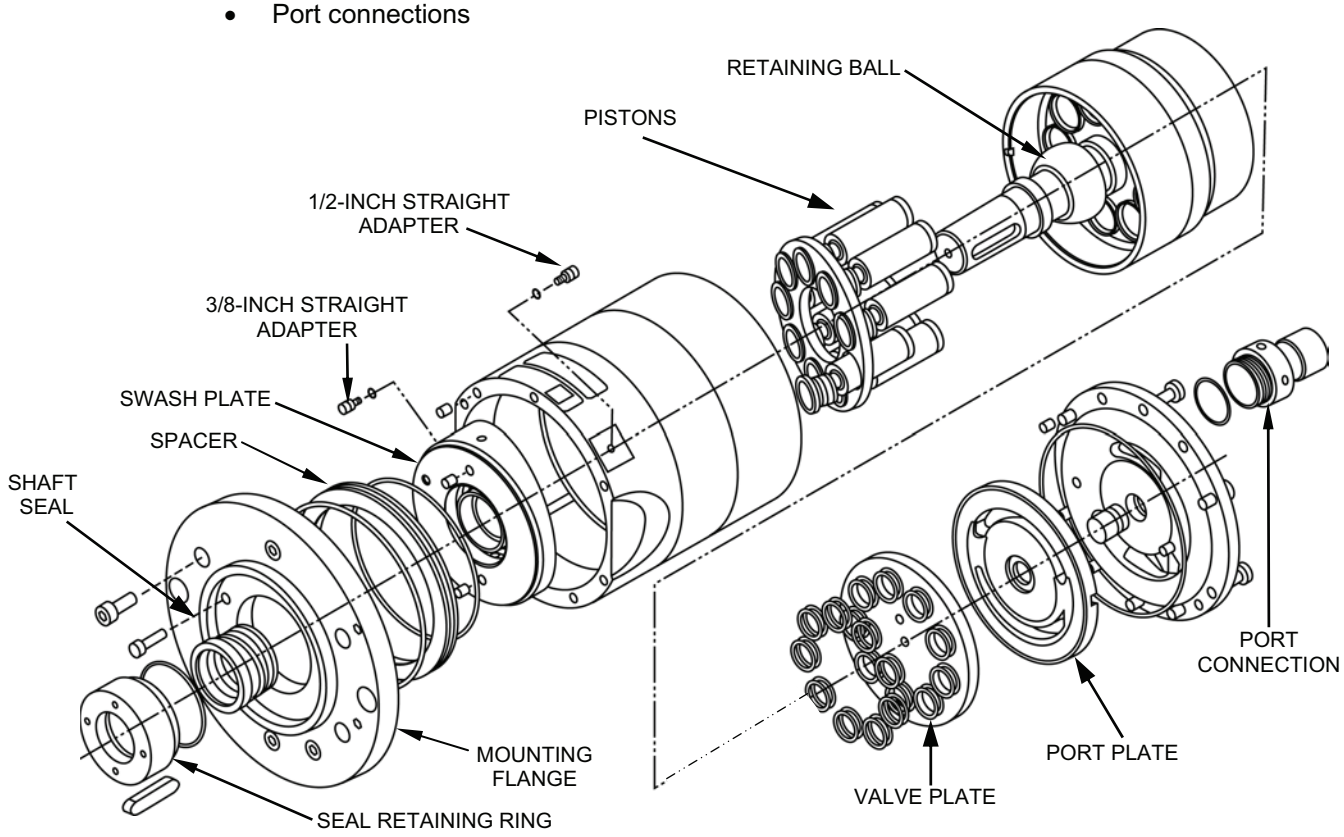

Figure 29. Pump Parts Replaced Only as Required.

5. Install new parts and reassemble the metal-body high-pressure pump as follows:
   a. Lightly lubricate nine new O-rings with glycerin and install them on the new valve plate (see Figure 30). The new plate comes with the backup rings already installed.

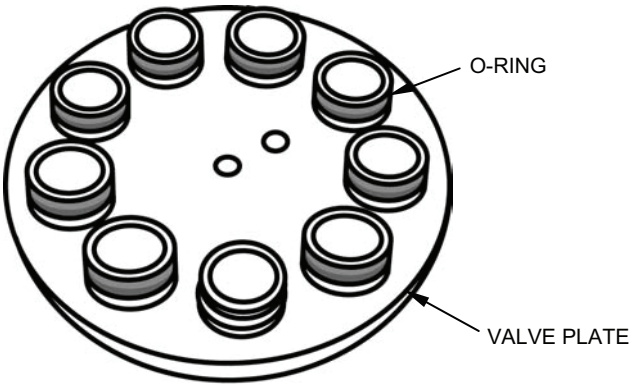

Figure 30. Valve Plate.

b. By hand, carefully press the cylinder barrel on the valve plate so that there is an even gap between the barrel and the valve plate (see Figure 31).

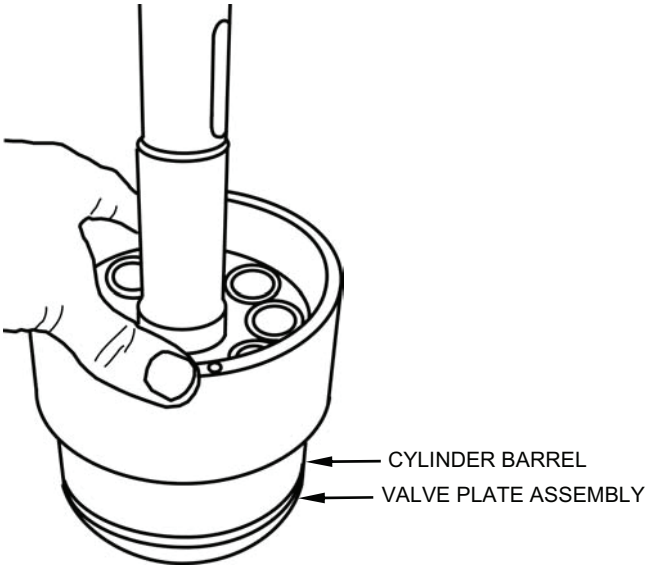

Figure 31. Installing Cylinder Barrel onto Valve Plate.

NOTE

The two ends of the center pin have different diameters. Install the larger diameter end of the center pin into the pump casing. The port plate fits over the smaller diameter end of the center pin.

c. Insert the plastic guide pin and metal center pin into the bottom of the pump casing (see Figure 32).
d. Install the port plate. Make sure the locating slot in the underside of the plate fits over the guide pin in the bottom of the pump casing (see Figure 32).

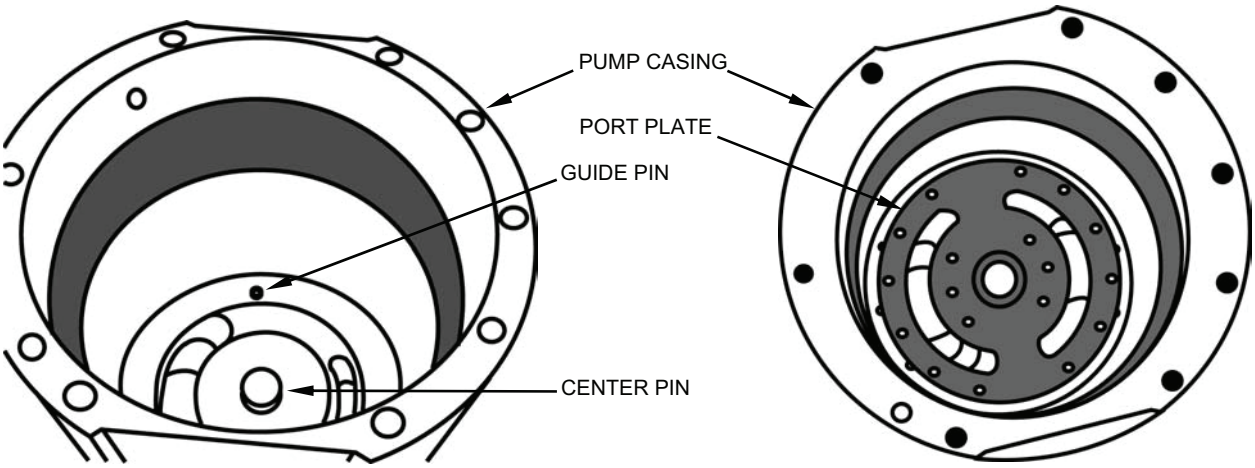

Figure 32. Port Plate and Guide Pin in Pump Casing.

e. Carefully slide the cylinder barrel into the pump casing (see Figure 33).
f. Slide the retaining ball onto the pump shaft (see Figure 33).

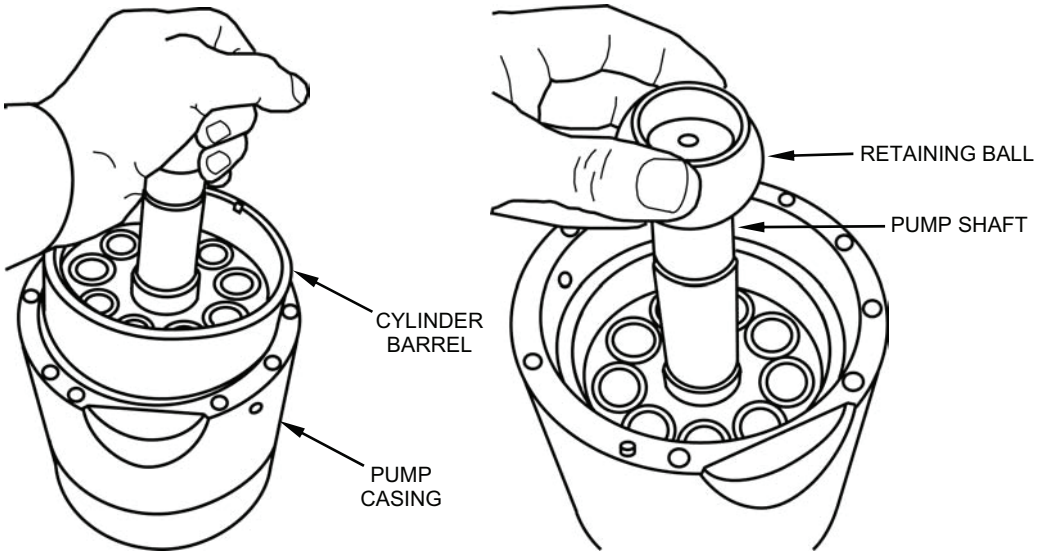

Figure 33. Installing the Cylinder Barrel and Retaining Ball.

NOTE

The edge of the center hole in the retaining ring is curved. Install the ring so that the curved edge faces downward and rests on the retaining ball. The pump cannot be properly assembled if the retaining ring is installed upside down.

g. Install the new retaining ring onto the pump shaft and rotate it as necessary to align the piston holes in the ring with the piston bores in the cylinder barrel.
h. Install the pistons, making sure they are seated flush onto the retaining ring.
i. Slide the new stop bushing over the pump shaft and onto the retaining ball (see Figure 34).
j. Slide the hollow bushing tool onto the pump shaft (see Figure 34)

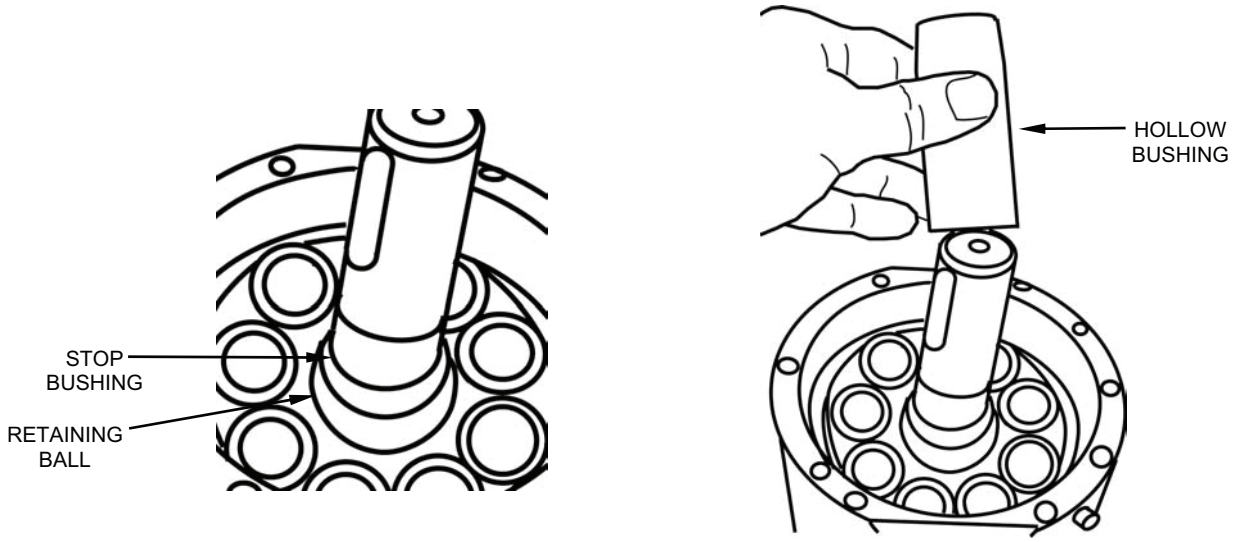

Figure 34. Installing Stop Bushing.

k. Thoroughly wet the hollow bushing, pump shaft, and the inside of a new shaft seal with glycerin.
l. Place the new shaft seal over the hollow bushing with the carbon seal facing up (see Figure 35).
m. Using the plastic assembly tool with the large diameter pointing down, press the shaft seal down onto the stop bushing (see Figure 35).
n. Remove the plastic assembly tool and the hollow bushing tool.

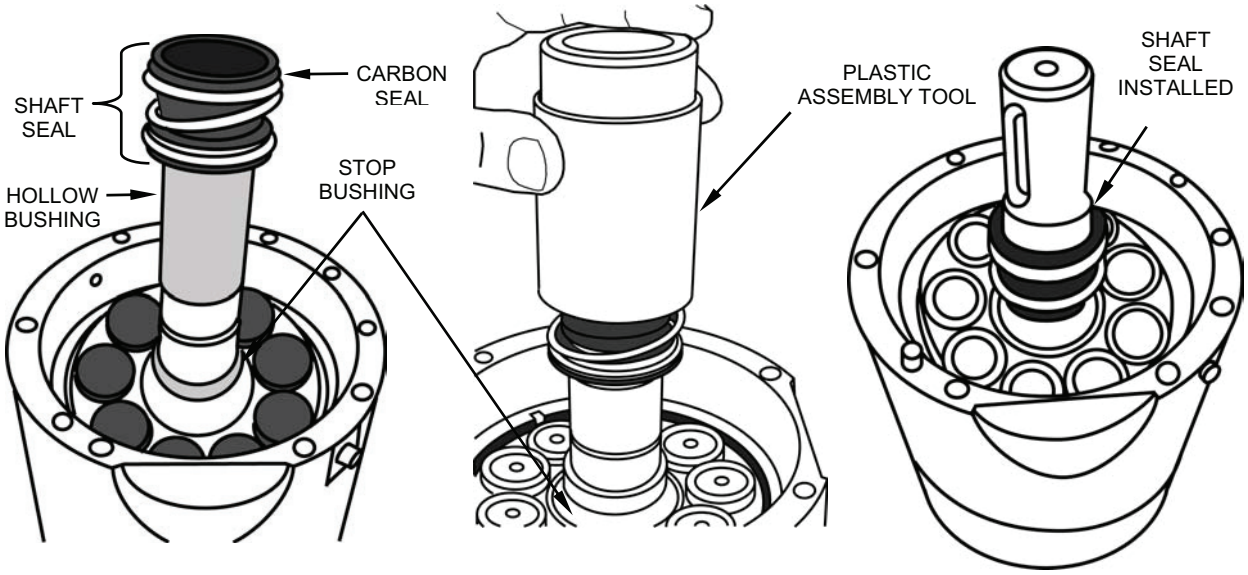

Figure 35. Installing Shaft Seal.

o. Remove the single screw attaching the swash plate to the mounting flange and remove the swash plate and spacer (see Figure 36).

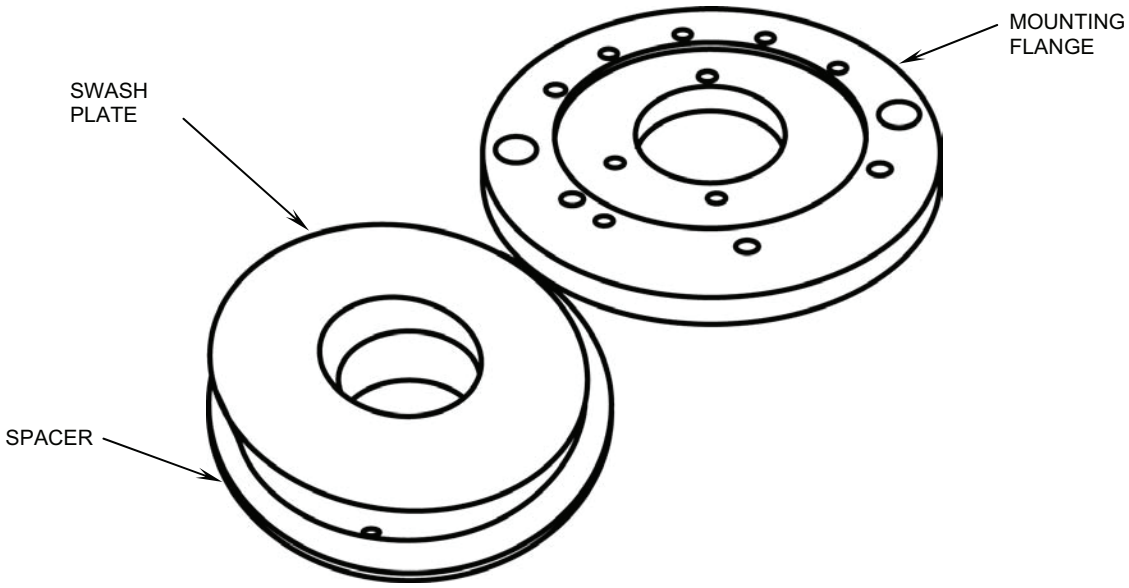

Figure 36. Swash Plate and Spacer.

p. Remove the inner and outer O-rings from the spacer and discard them.
q. Lightly lubricate new O-rings with glycerin and install them on the spacer (see Figure 37).

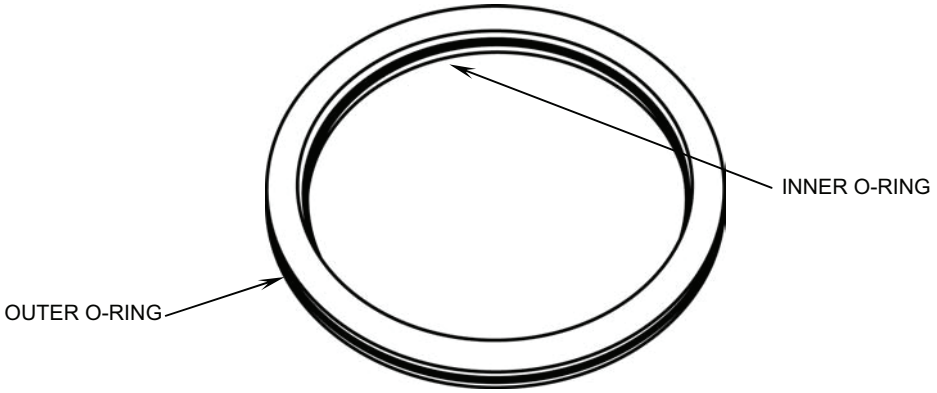

Figure 37. Spacer O-Rings.

r. Mount the spacer on the swash plate (see Figure 38)

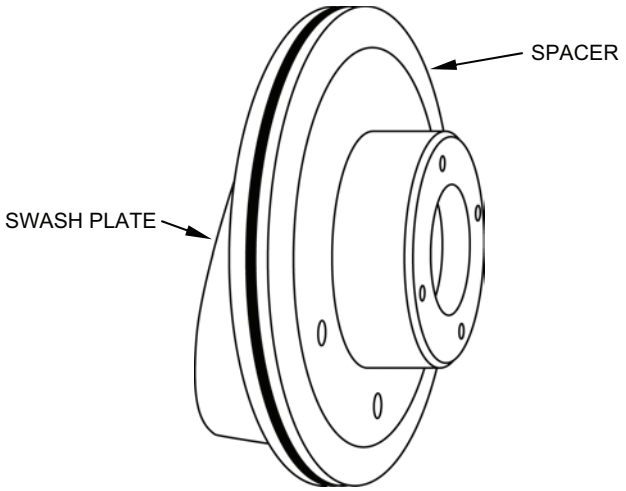

Figure 38. Spacer Mounted On The Swash Plate.

s. Position the swash plate over the guide pins on the mounting plate and attach it with the screw.
t. Place the guide pin removed earlier in the pump casing (see Figure 39).
u. Position the swash plate/mounting flange assembly over the guide pin and gently press the assembly into the pump casing, taking care not to pinch or twist the O-ring or damage the carbon face of the shaft seal (see Figure 39).

NOTE

Position the mounting flange and lightly press it into place. Make sure that the swash plate O-ring is not pinched. Use the eight hex-head screws to pull the flange evenly down into position.

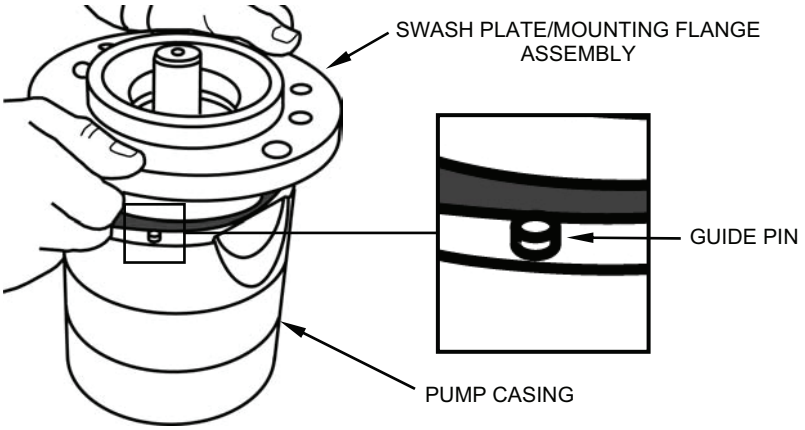

Figure 39. Installing Swash Plate/Mounting Flange Assembly into Pump Casing.

v. Lightly coat the threads of the eight mounting flange hex-head screws with a small amount of antiseize compound.

w. Using the hex key, secure the mounting flange to the pump casing with the eight hex-head screws (see **Figure 40**). Tighten in an alternating star pattern, checking under the flange frequently to ensure the O-ring seats properly and does not bulge out.

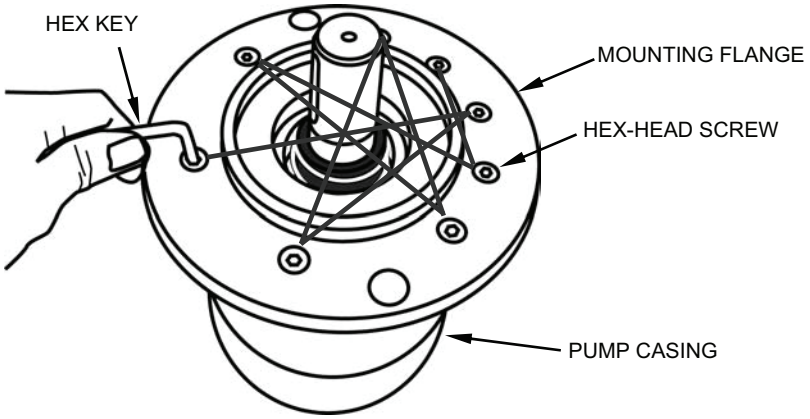

Figure 40. Securing Mounting Flange to Pump Casing.

CAUTION

Be careful not to damage the seal-retaining ring while removing the ceramic ring. If the inner surface is scratched or otherwise damaged, the seal-retaining ring must be replaced.

x. Set the seal-retaining ring upside down on a clean surface. Carefully remove the old ceramic ring and rubber seal by pushing them out using a brass punch or other soft tool (see Figure 41).
y. Wet the seal-retaining ring, new rubber seal, and the new ceramic ring (part of the new shaft seal assembly) with glycerin.
z. Position the new ceramic ring and rubber seal over the seal-retaining ring with the rubber seal facing down.
aa. Using the plastic assembly tool, push the new ceramic ring into the seal-retaining ring (see Figure 41).
bb. Remove the old O-ring from the seal-retaining ring. Lightly lubricate a new O-ring with glycerin and install it on the seal-retaining ring (see Figure 41).

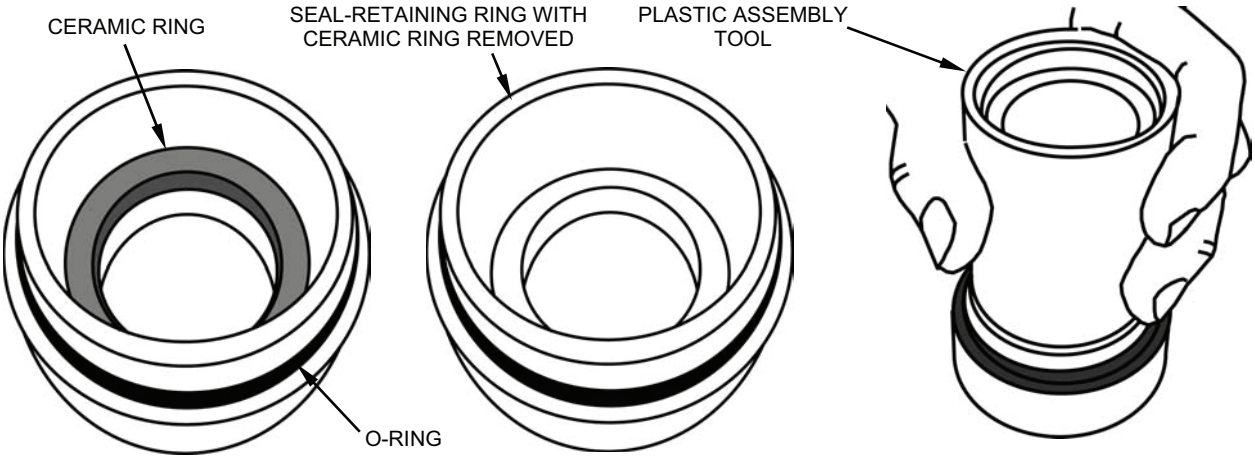

Figure 41. Replacing Ceramic Ring in Seal-Retaining Ring.

cc. Lightly coat the threads of the seal-retaining ring with a small amount of antiseize compound. Be careful not to get any compound on the ceramic ring.
dd. Thread the retaining ring into the mounting flange by hand. Do not cross-thread.
ee. Using the retaining ring tool, tighten the seal-retaining ring (see Figure 42).

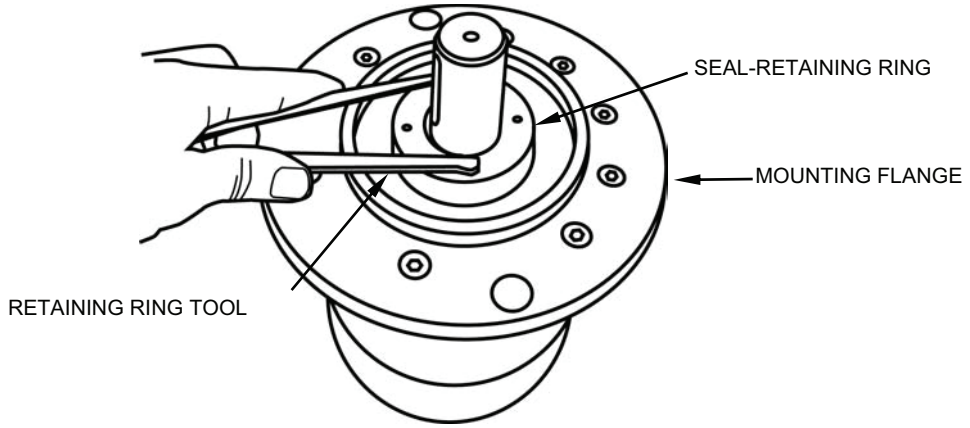

Figure 42. Installing Seal-Retaining Ring into Mounting Flange.

ff. Replace the O-ring from both port connections. Lightly lubricate new O-rings with glycerin before installing (see Figure 43).
gg. Install the port connections onto the pump port flange.
hh. Replace the O-ring on the two straight adapters. Lightly lubricate the new O-rings with glycerin before installing (see Figure 43).
ii. Install the larger (1/2 inch) straight adapter into the top bleed port of the pump.
jj. Install the smaller (3/8 inch) straight adapter into the bottom bleed port of the pump.

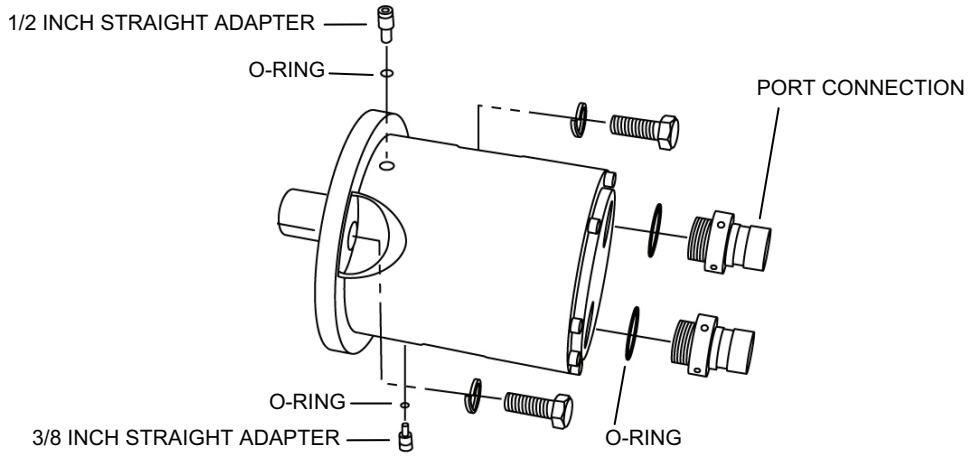

Figure 43. Installing Pump Straight Adapters and Port Connections.

6. Install the pump onto the motor/mounting flange assembly as described earlier in this WP under the heading **Pump Replacement**.
7. Perform the Initial Start-Up or Start-Up With The System Fully Drained procedures described in WP 0012, TM 10-4610-309-10.
8. Check for leaks and proper pump/motor operation.

END OF WORK PACKAGE

TACTICAL WATER PURIFICATION SYSTEM (TWPS) FIELD MAINTENANCE PROCEDURES AIR SYSTEM, HIGH PRESSURE

0015 00

THIS SECTION COVERS:
Replace, Service

INITIAL SETUP:

Maintenance Level
Field
Tools
Army: General Mechanic's Tool Kit (WP 0037)
Marine Corps: Common No. 1 Tool Set (WP 0037)
Wrench, Air Compressor Purification Chamber (BII)
References:
Refer to TM 10-4610-309-23P for repair parts information
Personnel Required
One
Equipment Condition
TWPS in Standby Shutdown Without Draining Down or With Drain-Down as required
Army: Generator off and TWPS main breaker off
Marine Corps: TWPS disconnected from power source
High Pressure Air System or entire air system bled down as required

GENERAL:

This work package contains information and instructions for replacing and servicing components in the high pressure air system. The procedures covered in this work package include:

- High-Pressure Air System Bleed Down Procedures
- Entire Air System Bleed Down Procedures
- Oil/Water Coalescer CO1 Replacement
- Purification Filter Assembly AF2 Replacement
- Pressure Switch Assembly PSL/PSH-901 Replacement
- Air System Section 1 Assembly Replacement
- Pressure Maintaining Valve V-905 Replacement
- Low Pressure Air Check Valve V-906 Replacement
- Pressure Gauge PI-901 Replacement
- Air Receiver Tank R-1 Replacement
- Pressure Regulating Valve PRV-901 Replacement
- Pressure Gauge PI-902 Replacement
- Relief Valve RV-902 Replacement
- CO1 Oil Water Coalescer Sintered Metal Filter Service

All air system repair procedures in this work package, except for the pressure maintaining valve and gauge replacement and the pressure switch adjustment, will be performed off the TWPS.

HIGH-PRESSURE AIR SYSTEM BLEED DOWN PROCEDURES:

WARNING

The TWPS must be in Shutdown and the TQG and TWPS main breaker must be off (Army) or the TWPS disconnected from its power source (Marine Corps) prior to performing maintenance on components in the TWPS high-pressure air system. Failure to observe this warning can result in injury to personnel and damage to equipment.

High pressure. The air system contains air pressure up to 1800 psig. The high pressure air system must be bled prior to performing maintenance on components in the TWPS high-pressure air system. Failure to observe this warning can result in injury to personnel and damage to equipment.

Bleed the high-pressure air system as follows:

1. Make sure TWPS is in Standby Shutdown without Draining Down (WP 0013, TM 10-4610-309-10).
2. Bleed the high pressure air system as follows (see Figure 1 for valve location):
   a. Switch the Air Compressor control at the OCP to OFF.
   b. **Slowly** open High Pressure Air Vent Valve V-904 to bleed the air from the high-pressure system. Then close the valve.

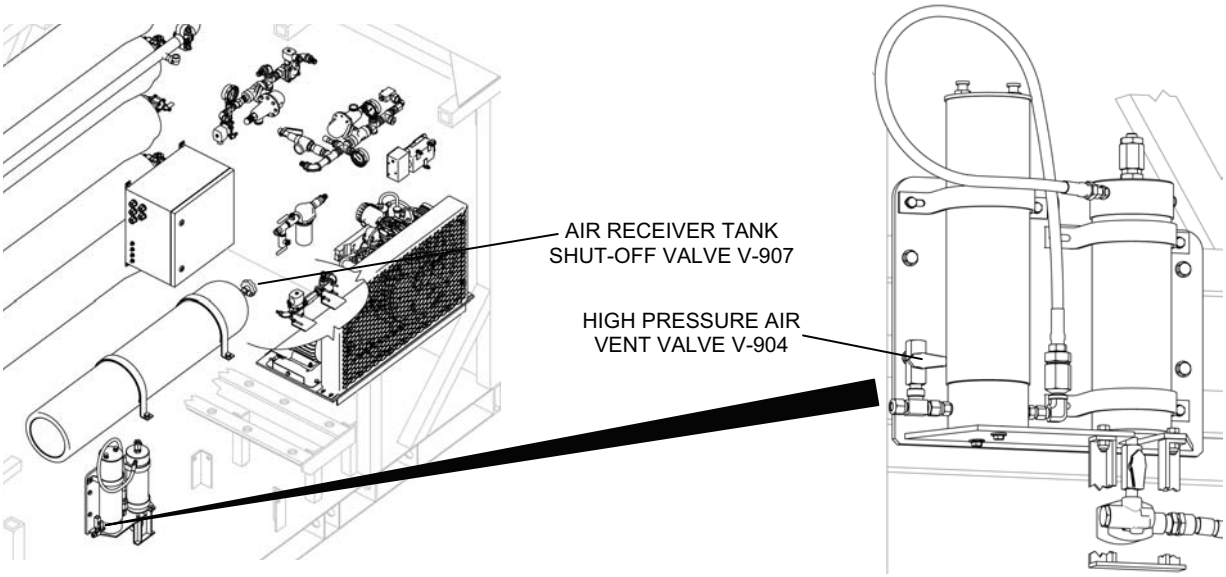

Figure 1. Valves for Bleeding the High Pressure Air System.

ENTIRE AIR SYSTEM BLEED DOWN PROCEDURES:

WARNING

The TWPS must be in Shutdown and the TQG and TWPS main breaker must be off (Army) or the TWPS disconnected from its power source (Marine Corps) prior to performing maintenance on the TWPS Air System. Failure to observe this warning can result in injury to personnel and damage to equipment.

High pressure. The air system contains air pressure up to 1800 psig. The air system must be bled prior to performing maintenance on components of the air system. Failure to observe this warning can result in injury to personnel and damage to equipment.

Bleed the entire air system as follows:

1. Make sure TWPS is in Standby Shutdown without Draining Down (WP 0013, TM 10-4610-309-10).
2. Bleed the entire air system as follows (see Figure 2 for valve location):
   a. Stop the air compressor by switching the Air Compressor control at the OCP to OFF.
   b. Close Air Receiver Tank Shut-Off Valve V-907.
   c. Make sure that Low Pressure Air Shut Off Valve V-909 is open.
   d. **Slowly** open Low Pressure Air Vent Valve V-910 to bleed the air from the low pressure air system.
   e. **Slowly** open High Pressure Air Vent Valve V-904 to bleed the air from the high pressure air system.

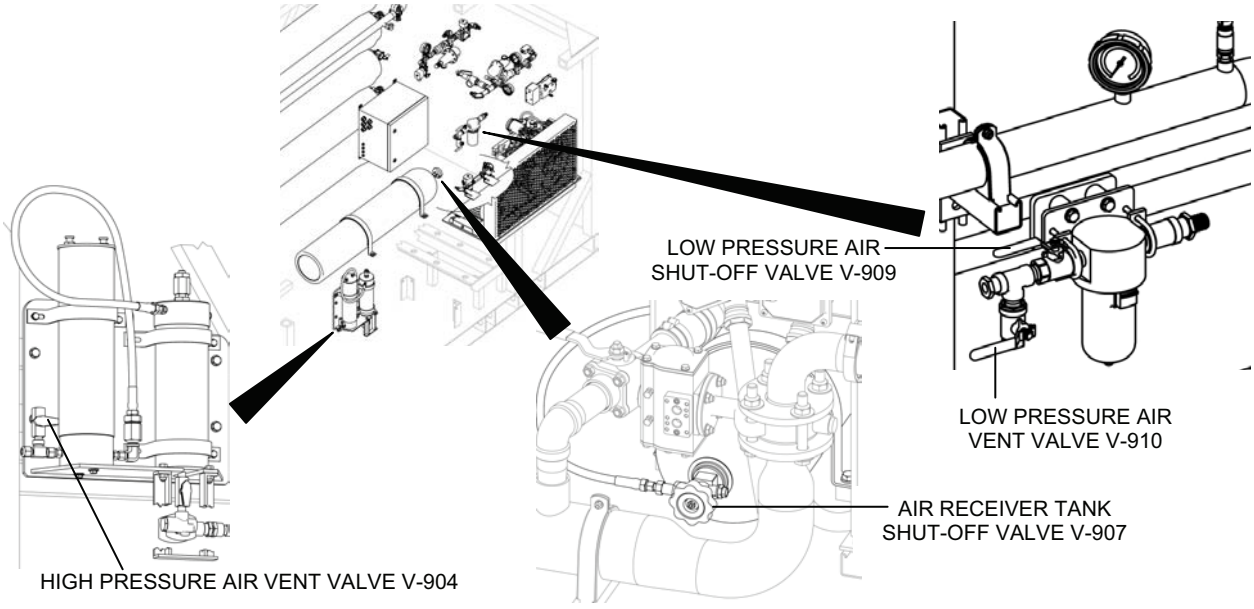

Figure 2. Valves for Bleeding the Entire Air System.

REPLACE

Oil/Water Coalescer CO1 Replacement:

Parts (TM 10-4610-309-23P):
Oil/Water Coalescer
Material:
Tape, antiseizing (WP 0038, Table 1, item 49, 50)
Clean, lint-free rags (WP 0038, Table 1, item 39)
Equipment Condition:
TWPS in Standby Shutdown Without Draining Down
Army: Generator off and TWPS main breaker off
Marine Corps: TWPS disconnected from power source
High Pressure Air System bled down

WARNING

The TWPS must be in Shutdown and the TQG and TWPS main breaker must be off (Army) or the TWPS disconnected from its power source (Marine Corps) prior to performing maintenance on the TWPS Air System. Failure to observe this warning can result in injury to personnel and damage to equipment.

High pressure. The air system contains air pressure up to 1800 psig. The air system must be bled prior to performing maintenance on components of the air system. Failure to observe this warning can result in injury to personnel and damage to equipment.

Replace oil/water coalescer CO1 as follows (see Figure 3):

1. Make sure the high-pressure air system has been bled down. Refer to **HIGH-PRESSURE AIR SYSTEM BLEED DOWN**.
2. Remove the CO1 oil/water coalescer as follows:
   a. Disconnect the hose connections from the coalescer.
   b. Remove the valve protector assembly by removing the 2 bolts, 4 washers, and 2 nuts.
   c. Disconnect the electrical plug to the solenoid assembly.
   d. Remove the two brackets and two gaskets that secure the coalescer to the mounting plate by removing the 2 cap screws, 2 star washers, and 2 flat washers.

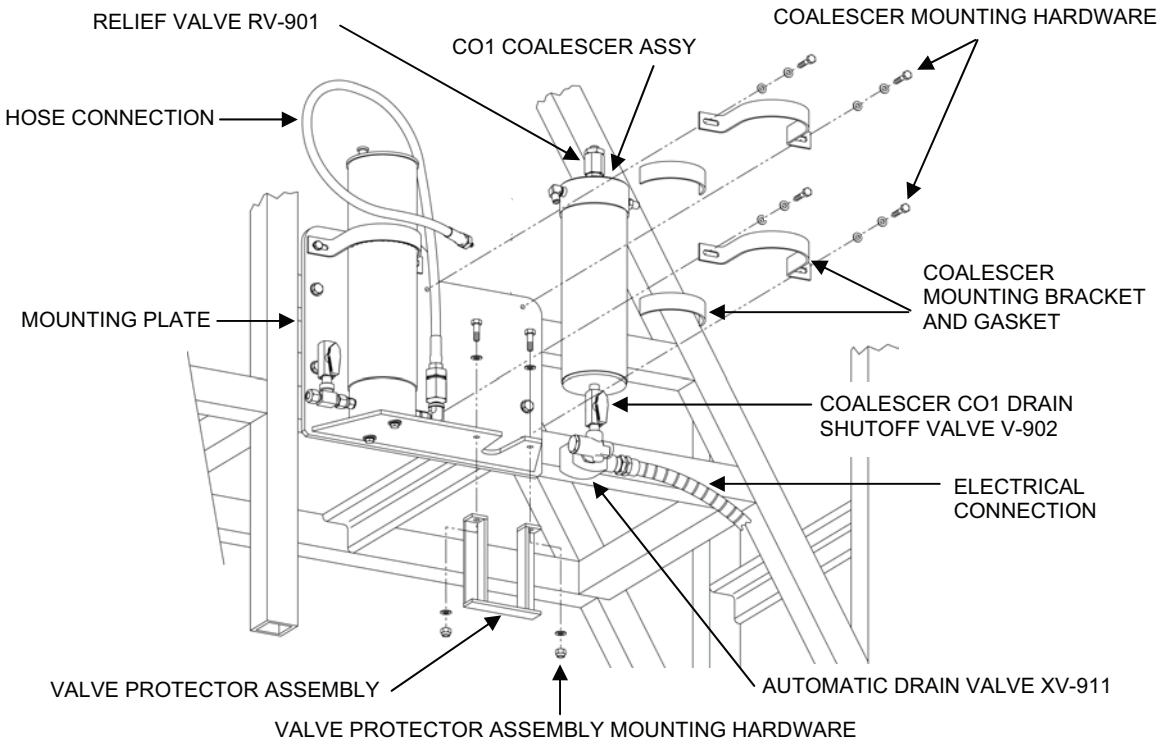

Figure 3. Oil/Water Coalescer CO1.

3. Place the old CO1 coalescer on a clean workbench and perform the following steps:
   a. Unscrew Coaleser CO1 Drain Shutoff Valve V-902 with piping from the coalescer.
   b. Remove the input, output and relief valve adapters from the old coalescer.
   c. Clean the three adapters and Coaleser CO1 Drain Shutoff Valve V-902.
   d. Apply antiseizing tape to the threads of the adapters and the vent valve.
   e. If Relief Valve RV-901 was removed, clean and install antiseizing tape to its threads and reinstall in its adapter.
   f. Install the adapter with the relief valve to the new coalescer.
   g. Install the two adapters onto the new oil/water coalescer.
4. Install the new oil/water CO1 coalescer as follows:
   a. Install Coaleser CO1 Drain Shutoff Valve V-902 with piping to the coalescer CO1.
   b. Secure the coalescer to the mounting plate with the 2 brackets, 2 gaskets, 2 cap screws, 2 star washers, and 2 flat washers.
   c. Install the valve protector assembly using the 2 bolts, 4 washers, and 2 nuts.
   d. Connect the hoses to the coalescer that were removed earlier.
5. Start the air compressor.
6. Check the new oil/water CO1 coalescer for leaks.
7. Check the automatic drain valve for proper operation.

Purification Filter Assembly AF2 Replacement:

Parts (TM 10-4610-309-23P):
Purification Filter Assembly AF2
Material:
Tape, antiseizing (WP 0038, Table 1, item 49, 50)
Clean, lint-free rags (WP 0038, Table 1, item 39)
Equipment Condition:
TWPS in Standby Shutdown Without Draining Down
Army: Generator off and TWPS main breaker off
Marine Corps: TWPS disconnected from power source
High Pressure Air System bled down

WARNING

The TWPS must be in Shutdown and the TQG and TWPS main breaker must be off (Army) or the TWPS disconnected from its power source (Marine Corps) prior to performing maintenance on the TWPS Air System. Failure to observe this warning can result in injury to personnel and damage to equipment.

High pressure. The air system contains air pressure up to 1800 psig. The air system must be bled prior to performing maintenance on components of the air system. Failure to observe this warning can result in injury to personnel and damage to equipment.

Replace Purification Filter Assembly AF2 as follows:

1. Make sure the high-pressure air system has been bled down. Refer to **HIGH-PRESSURE AIR SYSTEM BLEED DOWN**.
2. Remove Purification Filter Assembly AF2 as follows (see Figure 4):
   a. Disconnect the hose connection and Check Valve V-903 connection from the filter assembly.
   b. Remove the two bolts that secure the filter assembly to the bottom mounting plate.
   c. Remove the bracket while supporting Purification Filter Assembly AF2.
   d. Remove the purification filter assembly from the TWPS.

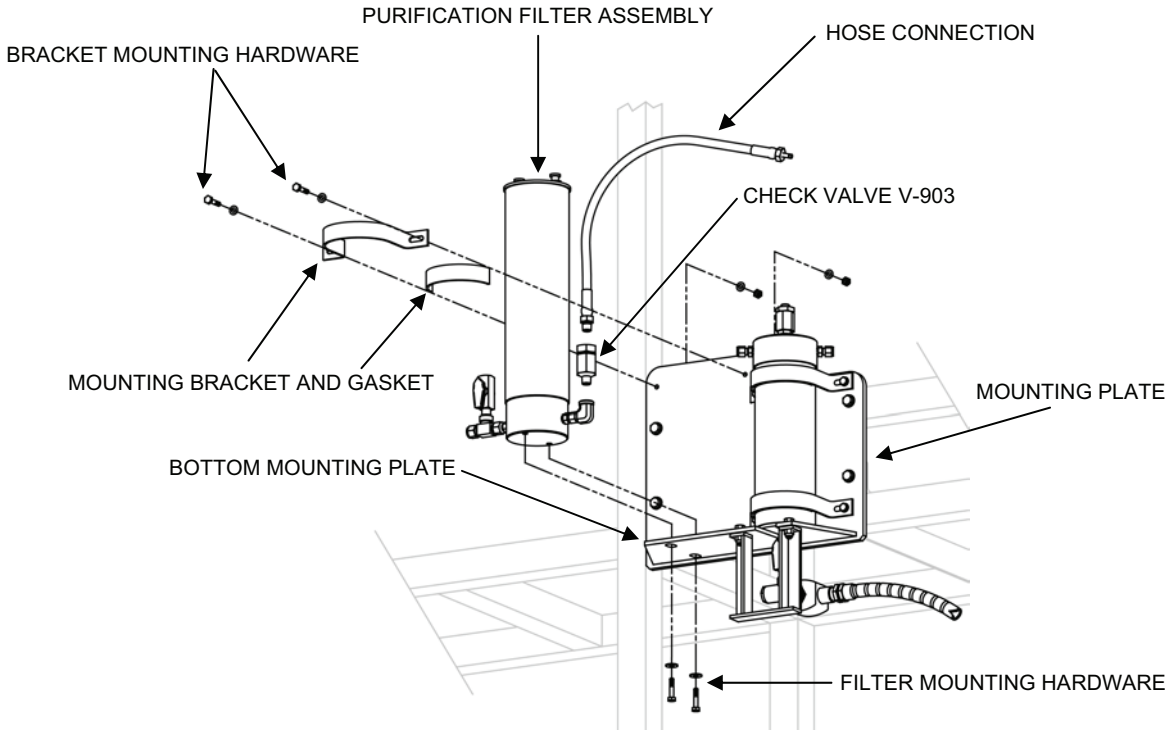

Figure 4. Purification Filter Assembly AF2.

3. Place the old AF2 purifier filter assembly on a clean workbench and perform the following steps:
   a. Remove the input and output adapters from the old filter assembly.
   b. Clean the two adapters.
   c. Apply antiseizing tape to the threads of the adapters.
   d. Install the two adapters into the new purification filter assembly.
4. Install the new purification filter assembly AF2 as follows:
   a. Install the two bolts that secure the filter assembly to the bottom mounting plate.
   b. Install the bracket that holds the purifier filter assembly in position.
   c. Reconnect the hose and Check Valve V-903 to the purifier assembly.
5. Check the new Purification Filter Assembly AF2 for leaks.

Pressure Switch Assembly PSL/PSH-901 Replacement:

Parts (TM 10-4610-309-23P):
Pressure Switch Assembly PSL/PSH-901
Materials:
Tape, antiseizing (WP 0038, Table 1, item 49, 50)
Equipment Condition:
TWPS in Standby Shutdown Without Draining Down
Army: Generator off and TWPS main breaker off
Marine Corps: TWPS disconnected from power source
Entire air system bled down
Replace Pressure Switch Assembly PSL/PSH-901 as follows:

WARNING

The TWPS must be in Shutdown and the TQG and TWPS main breaker must be off (Army) or the TWPS disconnected from its power source (Marine Corps) prior to performing maintenance on the TWPS Air System. Failure to observe this warning can result in injury to personnel and damage to equipment.

High pressure. The air system contains air pressure up to 1800 psig. The air system must be bled prior to performing maintenance on components of the air system. Failure to observe this warning can result in injury to personnel and damage to equipment.

1. Make sure the air system has been bled down. Refer to **ENTIRE AIR SYSTEM BLEED DOWN**.
2. Remove the pressure switch assembly as follows (see Figure 5):
   a. Remove the terminal box cover and remove the two screws that secure the control wires.
   b. Unscrew the ring nut from the terminal box connection and pull the control wire out.
   c. Loosen the nut on the ferrule of the air hose compression fitting and remove the air hose.
   d. Remove the three bolts, six washers, and three nuts that secure the pressure switch assembly to the TWPS and remove the pressure switch assembly.
   e. Remove the elbow ferrule from the assembly.

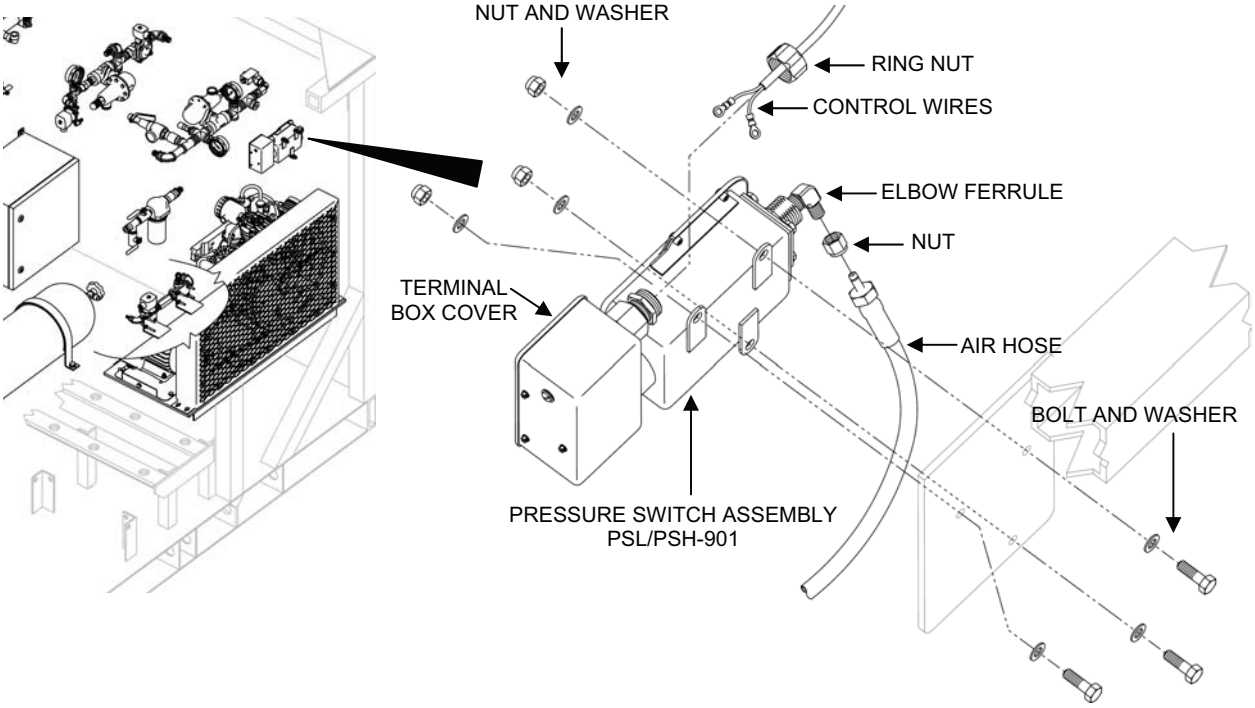

Figure 5. Pressure Switch Assembly PSL/PSH-901 Replacement.

3. Install the new pressure switch assembly as follows (see Figure 5):
    a. Clean the threads of the elbow ferrule and wrap antiseize tape around the threads.
    b. Screw the ferrule into the pressure switch assembly box.
    c. Secure the pressure switch assembly to the TWPS using the three bolts, six washers, and three nuts.
    d. Secure the air hose to the elbow ferrule on the pressure switch assembly box. Refer to WP 0025, TM 10-4610-309-10, **REPLACE** and **Compression Fitting Connected Hose Replacement**.
    e. Remove the new pressure switch assembly terminal box cover. Feed the control wires into the box. Secure the red wire with the upper terminal screw. Secure the black wire with the lower terminal screw.
    f. Screw the ring nut onto the terminal box connection
    g. Secure the pressure switch assembly terminal box cover to the box.

Air System Section 1 Assembly Replacement:

Parts (TM 10-4610-309-23P):
Air System Section 1 Assembly
Materials:
Tape, antiseizing (WP 0038, Table 1, item 49, 50)
Personnel Required:
Two
Equipment Condition:
TWPS in Standby Shutdown Without Draining Down
Army: Generator off and TWPS main breaker off
Marine Corps: TWPS disconnected from power source
Entire air system bled down

WARNING

The TWPS must be in Shutdown and the TQG and TWPS main breaker must be off (Army) or the TWPS disconnected from its power source (Marine Corps) prior to performing maintenance on the TWPS Air System. Failure to observe this warning can result in injury to personnel and damage to equipment.

High pressure. The air system contains air pressure up to 1800 psig. The air system must be bled prior to performing maintenance on components of the air system. Failure to observe this warning can result in injury to personnel and damage to equipment.

Replace the Air System Section 1 assembly as follows:

1. Make sure the air system has been bled down. Refer to **ENTIRE AIR SYSTEM BLEED DOWN**.
2. Remove the Air System Section 1 assembly as follows (see Figure 6):
    a. Tag and disconnect the air supply hose from Pressure Maintaining Valve V-905.
    b. Tag and disconnect the hose from the Section 1 outlet that goes to the PSL/PSH-901 pressure switch.
    c. Tag and disconnect the hose from the Section 1 outlet that goes to Air Tank R-1.
    d. Tag and disconnect the hose from the Section 1 outlet that goes to Air System Section 3.

CAUTION

Two people are required to safely remove the Air System Section 1 assembly from the TWPS. Failure to observe this warning may result in damage to equipment.

e. With another person holding the Air System Section 1 assembly, disconnect the 3 U-bolts, 6 flat washers, and 6 locking nuts that attach the assembly to the TWPS frame.
f. Remove the Section 1 assembly from the TWPS and place on a clean workbench.

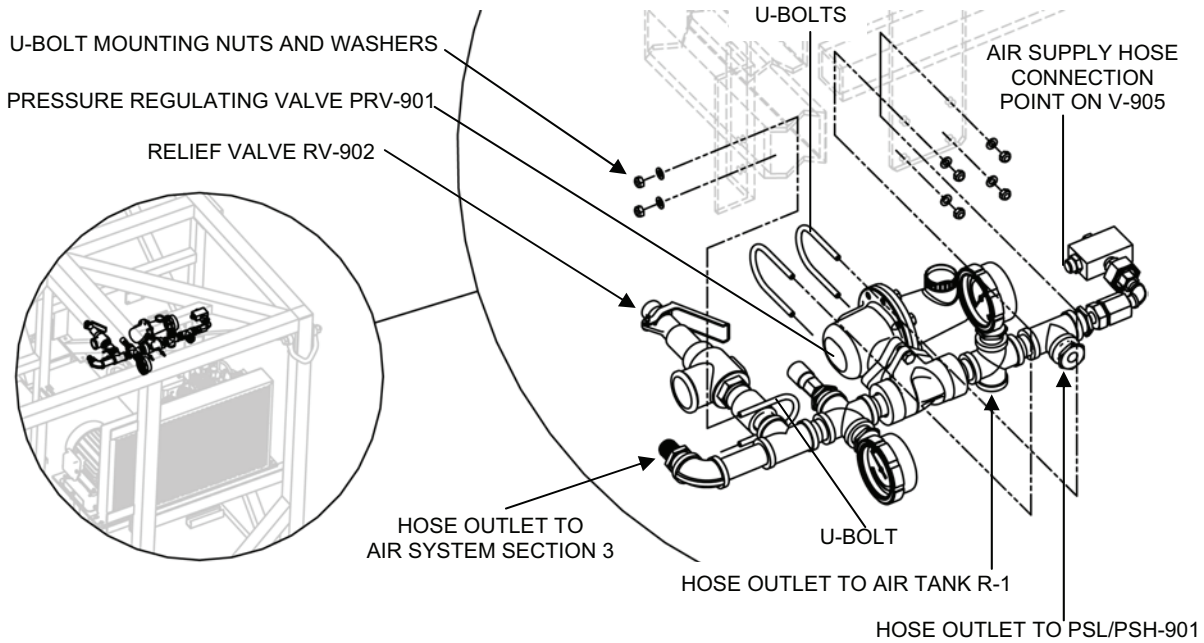

Figure 6. Air System Section 1 Assembly.

CAUTION

Two people are required to safely install the air system section 1 assembly to the TWPS. Failure to observe this warning may result in damage to equipment.

3. Install the new Air System Section 1 assembly onto the TWPS as follows (see Figure 6):
   a. With another person supporting the Air System Section 1 assembly, secure the assembly to the TWPS using the 3 U-bolts, 6 flat washers, and 6 locking nuts.
   b. Clean the hose connectors threads for the hoses that were disconnected from the old Air System Section 1. Wrap antiseizing tape on the cleaned threads.
   c. Connect the hose from Air System Section 3 to the Air System Section 1 assembly.
   d. Connect the hose from Air Receiver Tank R-1 to the Air System Section 1 assembly.
   e. Connect the hose from PSL/PSH-901 Pressure Switch assembly to the Air System Section 1 assembly.
   f. Connect the air supply hose to Pressure Maintaining Valve V-905.
4. Check the Air System Section 3 assembly for leaks.

Pressure Maintaining Valve V-905 Replacement:

Parts (TM 10-4610-309-23P):
Pressure Maintaining Valve V-905
Material:
Tape, antiseizing (WP 0038, Table 1, item 49, 50)
Equipment Condition:
TWPS in Standby Shutdown Without Draining Down
Army: Generator off and TWPS main breaker off
Marine Corps: TWPS disconnected from power source
Entire air system bled down

WARNING

The TWPS must be in Shutdown and the TQG and TWPS main breaker must be off (Army) or the TWPS disconnected from its power source (Marine Corps) prior to performing maintenance on the TWPS Air System. Failure to observe this warning can result in injury to personnel and damage to equipment.

High pressure. The air system contains air pressure up to 1800 psig. The air system must be bled prior to performing maintenance on components of the air system. Failure to observe this warning can result in injury to personnel and damage to equipment.

Replace Pressure Maintaining Valve V-905 as follows:

NOTE
Pressure-maintaining valve V-905 can be replaced without removing the air system section 1 assembly from the TWPS.

1. Make sure the air system has been bled down. Refer to **ENTIRE AIR SYSTEM BLEED DOWN**.
2. Remove Pressure Maintaining Valve V-905 from the Air System Section 1 assembly as follows (see Figure 7):
   a. Tag and disconnect the air supply hose from Pressure Maintaining Valve V-905.
   b. Disconnect the pressure-maintaining valve from the assembly at the pipe union.

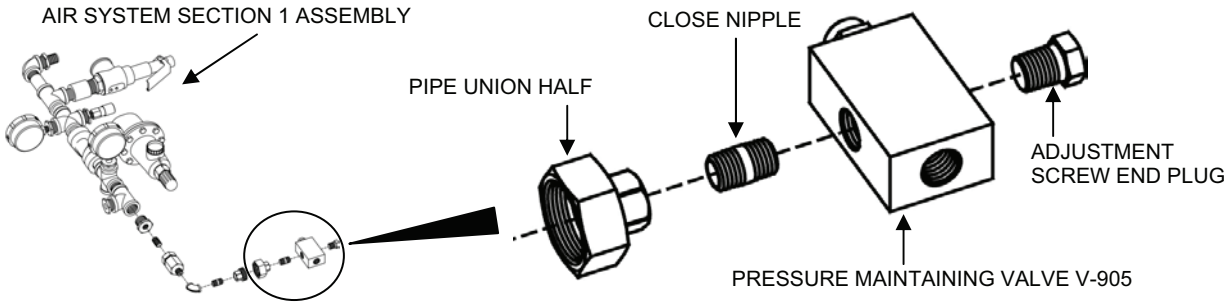

Figure 7. Pressure Maintaining Valve V-905.

3. Place the old pressure maintaining valve on a clean workbench and perform the following steps:
    a. Remove the close nipple and the half of the pipe union on the nipple from the valve. Separate the union half from the nipple.
    b. Clean both ends of the close nipple. Apply antiseizing tape to the threads at both ends.
    c. Thread the pipe union half onto the close nipple.
    d. Thread the close nipple with the union half into the output of the new pressure maintaining valve. Do not over-tighten.
    e. Clean the threaded end of the pipe union half that was left on the Section 1 assembly. Apply antiseizing tape to the threads.
4. Install the new pressure-maintaining valve on the Air System Section 1 assembly.
5. Make sure the position of Pressure Maintaining Valve V-905 matches Figure 6 (Air System Section 1 Assembly).
6. Check the new pressure-maintaining valve for leaks.

Low Pressure Air Check Valve V-906 Replacement:

Parts (TM 10-4610-309-23P):
Low-Pressure Air Check Valve V-906
Material:
Tape, antiseizing (WP 0038, Table 1, item 49, 50)
Clean, lint-free rags (WP 0038, Table 1, item 39)
Equipment Condition:
TWPS in Standby Shutdown Without Draining Down
Army: Generator off and TWPS main breaker off
Marine Corps: TWPS disconnected from power source
Entire air system bled down

WARNING

The TWPS must be in Shutdown and the TQG and TWPS main breaker must be off (Army) or the TWPS disconnected from its power source (Marine Corps) prior to performing maintenance on the TWPS Air System. Failure to observe this warning can result in injury to personnel and damage to equipment.

High pressure. The air system contains air pressure up to 1800 psig. The air system must be bled prior to performing maintenance on components of the air system. Failure to observe this warning can result in injury to personnel and damage to equipment.

Replace Low-Pressure Air Check Valve V-906 as follows:

1. Make sure the air system has been bled down. Refer to **ENTIRE AIR SYSTEM BLEED DOWN**.
2. Remove the Air System Section 1 assembly. Refer to **REPLACE** and **Air System Section 1 Assembly.**
3. Remove Low-Pressure Check Valve V-906 from the Air System Section 1 assembly as follows (see Figure 8):
    a. Disconnect Pressure-Maintaining Valve V-905 from the assembly at the pipe union.
    b. Disconnect the ¼-in. 90-degree elbow from the ¼-in. close nipple that is connected to the check valve.

NOTE
Note the direction of flow for Check Valve V-906 before removing it.

c. Disconnect Low-Pressure Check Valve V-906 from the ¾-in. to ¼-in. reducing bushing.

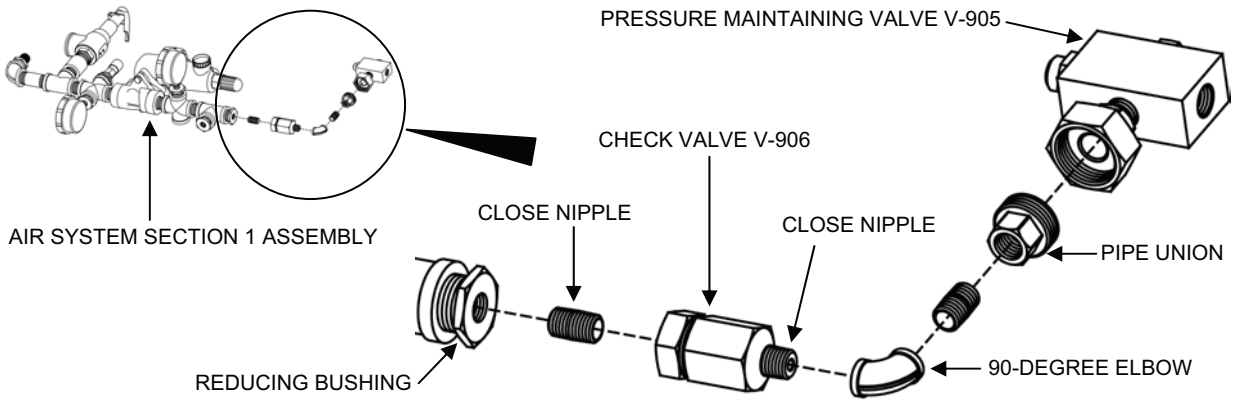

Figure 8. Low-Pressure Check Valve V-906.

4. Place the old Low-Pressure Check Valve V-906 on a clean workbench and perform the following:
   a. Remove the two close nipples from the Check Valve.
   b. Clean the two close nipples and apply antiseizing tape to one end of each.
   c. Thread the taped end of the pipe nipples into each end of the new Low-Pressure Check Valve V-906.
   d. Apply antiseizing tape to the other ends of the pipe nipples.
5. Install new Check Valve V-906 onto the Air System Section 1 assembly as follows (see Figure 8):

NOTE
Make sure the direction of flow for the Check Valve is correct. See Figure 8 for correct positioning of the Check Valve. Care must be taken not over-tighten. Loosening the connection once tightened could cause the connection to leak.

   a. Thread the check valve and close nipple into the ¾-in. to ¼-in. reducing bushing and tighten.
   b. Thread the ¼-in., 90-degree elbow onto the other close nipple on the check valve and tighten. Make sure that the position of the ¼-in., 90-degree elbow matches Figure 8.
   c. Clean the threads of the pipe union and apply antiseizing tape to the threads.
   d. Thread Pressure-Maintaining Valve V-905 onto the pipe union. Check the correct positioning of the pressure-maintaining valve.
6. Install the Air System Section 1 assembly onto the TWPS. Refer to **REPLACE** and **Air System Section 1 Assembly.**
7. Check the new Low-Pressure Check Valve V-906 for leaks.

Pressure Gauge PI-901 Replacement:

Parts (TM 10-4610-309-23P):
Pressure Gauge PI-901
Material:
Tape, antiseizing (WP 0038, Table 1, item 49, 50)
Equipment Condition:
TWPS in Standby Shutdown Without Draining Down
Army: Generator off and TWPS main breaker off
Marine Corps: TWPS disconnected from power source
Entire air system bled down

WARNING

The TWPS must be in Shutdown and the TQG and TWPS main breaker must be off (Army) or the TWPS disconnected from its power source (Marine Corps) prior to performing maintenance on the TWPS Air System. Failure to observe this warning can result in injury to personnel and damage to equipment.

High pressure. The air system contains air pressure up to 1800 psig. The air system must be bled prior to performing maintenance on components of the air system. Failure to observe this warning can result in injury to personnel and damage to equipment.

Replace Pressure Gauge PI-901 as follows:

NOTE
Pressure Gauge PI-901 can be replaced without removing the Air System Section 1 assembly from the TWPS.

1. Make sure the air system has been bled down. Refer to **ENTIRE AIR SYSTEM BLEED DOWN**.
2. Remove Pressure Gauge PI-901 from its reducing bushing in the Air System Section 1 assembly (see Figure 9).

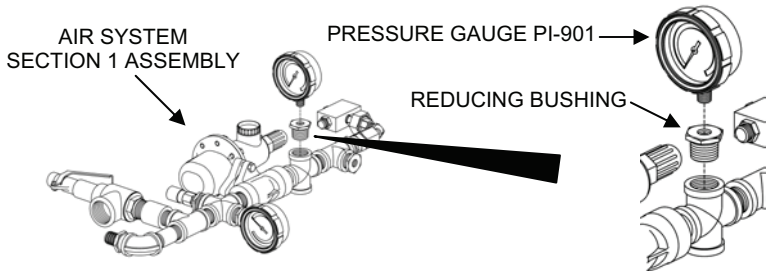

Figure 9. Pressure Gauge PI-901.

3. Clean and apply antiseizing tape to the threads of new Pressure Gauge PI-901.
4. Thread new Pressure Gauge PI-901 into its reducing bushing in the Air System Section 1 Assembly and tighten in the position shown in Figure 9.
5. Check new Pressure Gauge PI-901 for leaks.

Air Receiver Tank R-1 Replacement Replacement:

Parts (TM 10-4610-309-23P):
Air Receiver Tank R-1
Material:
Tape, antiseizing (WP 0038, Table 1, item 49, 50)
Glycerin (WP 0038, Table 1, item 24)
Clean, lint-free rags (WP 0038, Table 1, item 39)
Equipment Condition:
TWPS in Standby Shutdown With Drain-Down
Army: Generator off and TWPS main breaker off
Marine Corps: TWPS disconnected from power source
Entire air system bled down

WARNING

The TWPS must be in Shutdown and the TQG and TWPS main breaker must be off (Army) or the TWPS disconnected from its power source (Marine Corps) prior to performing maintenance on the TWPS Air System. Failure to observe this warning can result in injury to personnel and damage to equipment.

High pressure. The air system contains air pressure up to 1800 psig. The air system must be bled prior to performing maintenance on components of the air system. Failure to observe this warning can result in injury to personnel and damage to equipment.

Replace air receiver tank R-1 as follows:

1. Make sure that the TWPS is in Standby Shutdown With Drain-Down.
2. Bleed the entire air system as follows (see Figure 10 for valve location):
    a. Stop the air compressor by switching the Air Compressor control at the OCP to OFF.
    b. Open Air Receiver Tank Shut-Off Valve V-907.
    c. Make sure that Low Pressure Air Shut Off Valve V-909 is open.
    d. **Slowly** open Low Pressure Air Vent Valve V-910 to bleed the air from the low pressure air system.
    e. **Slowly** open High Pressure Air Vent Valve V-904 to bleed the air from the high pressure air system.

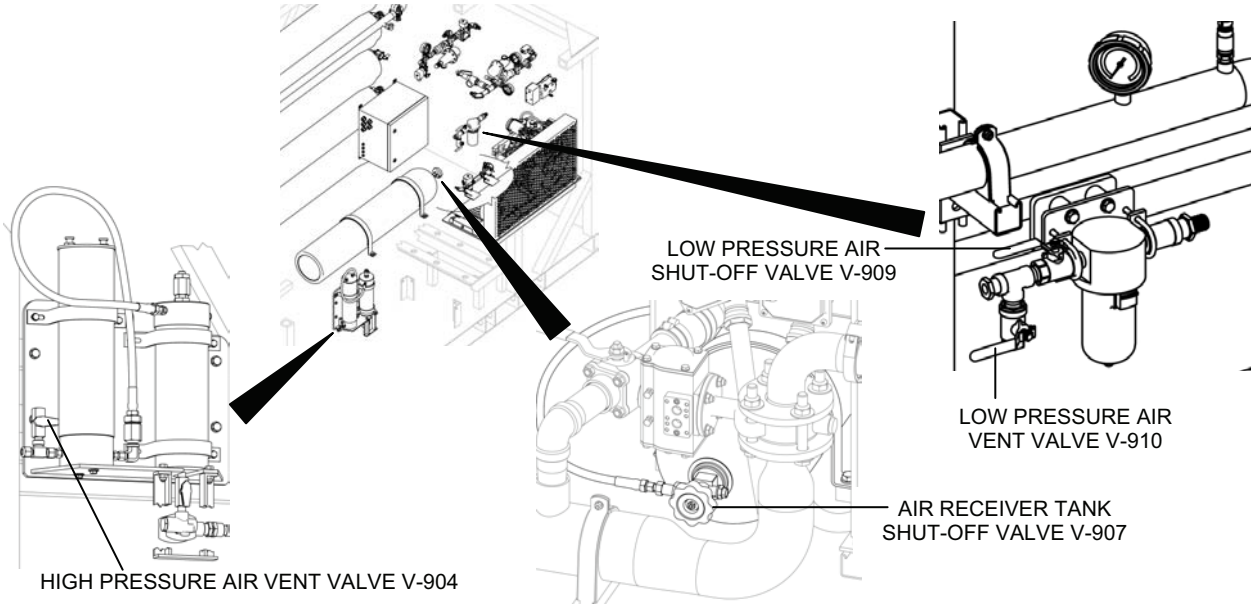

Figure 10. Low and High Pressure Air System Bleed Down.

3. Remove the 4 bolts, 4 lock washers, and 4 flat washers from the 2 upper ends of the frame cross braces at the right end of the TWPS.
4. Remove the 6 bolts, 12 flat washers, and 6 lock nuts from the middle of and the lower ends of the cross braces.
5. Tag and remove the frame cross braces (see Figure 11).

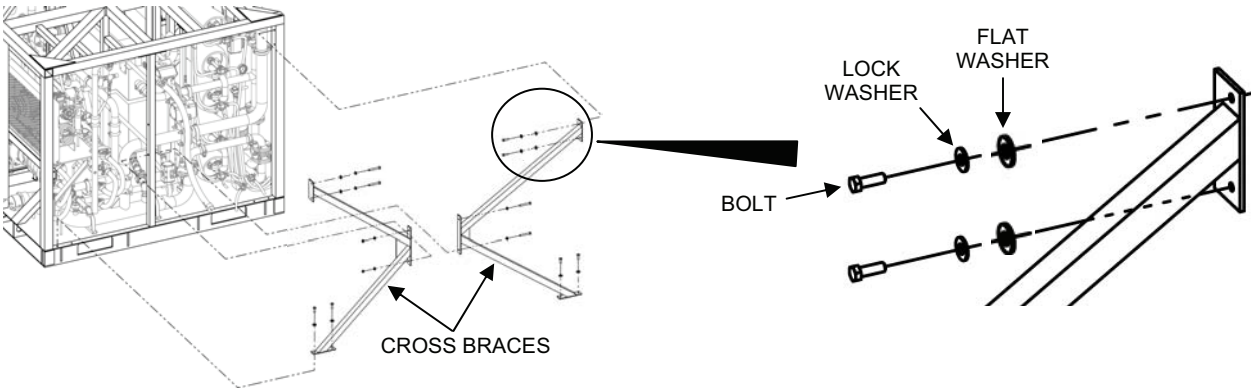

Figure 11. TWPS Frame Cross Brace Removal – Right End.

6. Remove any items stored under the HP pumps.
7. Remove High Pressure Pump Inlet Drain Valve V-214 from the High Pressure Pump Inlet Pipe Spool (see Figure 12).
8. Remove the High Pressure Pump Outlet Pipe Spool as follows (see Figure 12):
    a. Loosen the flex strut pipe support and remove the grooved coupling on the high pressure pump outlet pipe spool.
    b. Rotate the pipe spool to allow room for removing pressure gauge PI-301.
    c. Remove pressure gauge PI-301 from the High Pressure Pump (HPP) Outlet Pipe Spool.
    d. Remove the grooved coupling from the right end of the HPP Outlet Pipe Spool.
    e. Remove the grooved couplings on the high pressure outlet hoses at the outlet pipe spool.
    f. Tape the outlet hoses closed.
    g. Remove the flex strut pipe support from the left end of the HPP Outlet Pipe Spool.
    h. Carefully remove the HPP Outlet Pipe Spool.

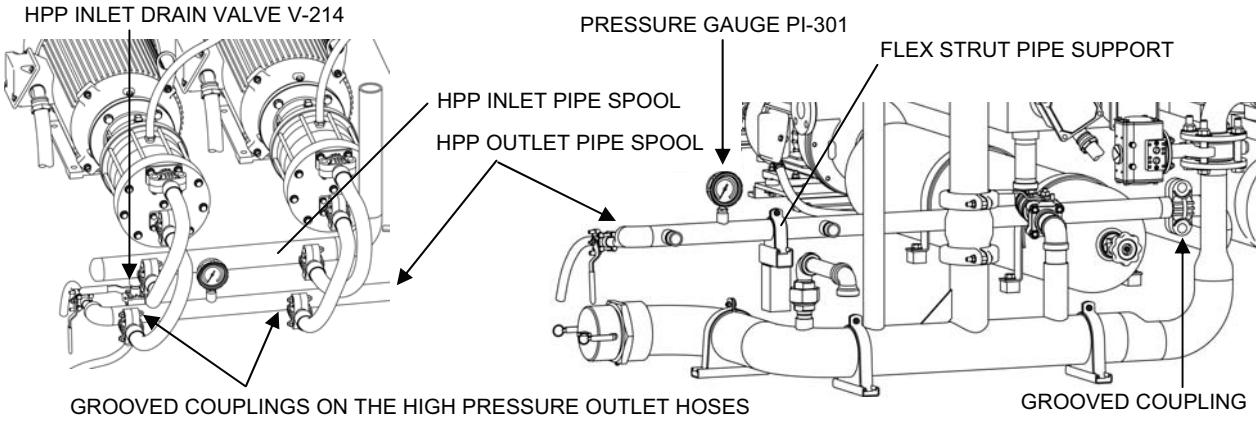

Figure 12. High Pressure Pump Outlet Pipe Spool Removal.

9. Remove the waste out pipe spool from in front of the air receiver tank as follows (see Figure 13):
   a. Disconnect the 4-in. x 5-ft. suction hose from the waste outlet (1).
   b. Remove 4 hose clamps (2) from the 2-in. rubber hose in the RO Feed Tank Drain Pipe.
   c. Remove RO Feed Tank Drain Valve V-412 (3) with the straight pipes on both sides of the valve.
   d. Remove the drain elbow with its 3 in. nipple (4) from the waste out pipe spool.
   e. Remove the two sanitary clamps and straight pipe (5) from the pipe spool upstream from MF Lower Shell Out Valve V-402.
   f. Disconnect the air tube from the MF Lower Shell Out Valve V-402 actuator (6) (see WP 0025, TM 10-4610-309-10).
   g. Remove MF Lower Shell Out Valve V-402 (6) and pipe elbow (7) (4 bolts, 8 washers, 4 nuts).
   h. Loosen the pipe coupling on the MF upper shell reject pipe spool (8) and push the coupling all the way down the lower pipe. Even pressure on both sides of the gasket (8A) makes it easier to slide the coupling down.
   i. Remove the grooved coupling (9) from the RO reject pipe spool.
   j. Remove the air tube from Shell Backwash Upper Outlet Valve V-401 (10) (see WP 0025, TM 10-4610-309-10).
   k. Remove the flex strut pipe support (11) to the right of valve V-401.
   l. Remove the sanitary clamp (12) to the right of the flex strut pipe support that was just removed.
   m. Lift out the MF Upper Reject Pipe Spool (13) with valve V-401 (10).
   n. Remove the three flex strut pipe supports (14) that secure the waste out pipe spool to the floor of the TWPS.

WARNING

Two person lift. Two people are required to safely lift the waste out pipe spool. Failure to observe this warning may result in injury.

NOTE

Lift or elevate the right end of the waste out pipe spool to assist in removal.

10. Remove the air receiver tank from the TWPS as follows (see Figure 13):

WARNING

Make sure the air system has been bled. Failure to bleed all pressure from the system may result in personal injury or damage to the equipment.

   a. Disconnect the air hose from Air Receiver Tank Shut-Off Valve V-907 (15).
   b. Remove the front bolts and washers (16) from the two bands that secure the air receiver tank to the floor of the TWPS.
   c. Remove the rear bolt and washer (17) from the band closest to the valve end of the air receiver tank and remove the band (18) and upper rubber cushion (19).

WARNING

Two person lift. Two people are required to safely lift the air receiver tank. Failure to observe this warning may result in injury.

d. Carefully lift the right end of the waste out pipe spool (20).
e. Pull the air receiver tank (21) out under the waste out pipe spool.

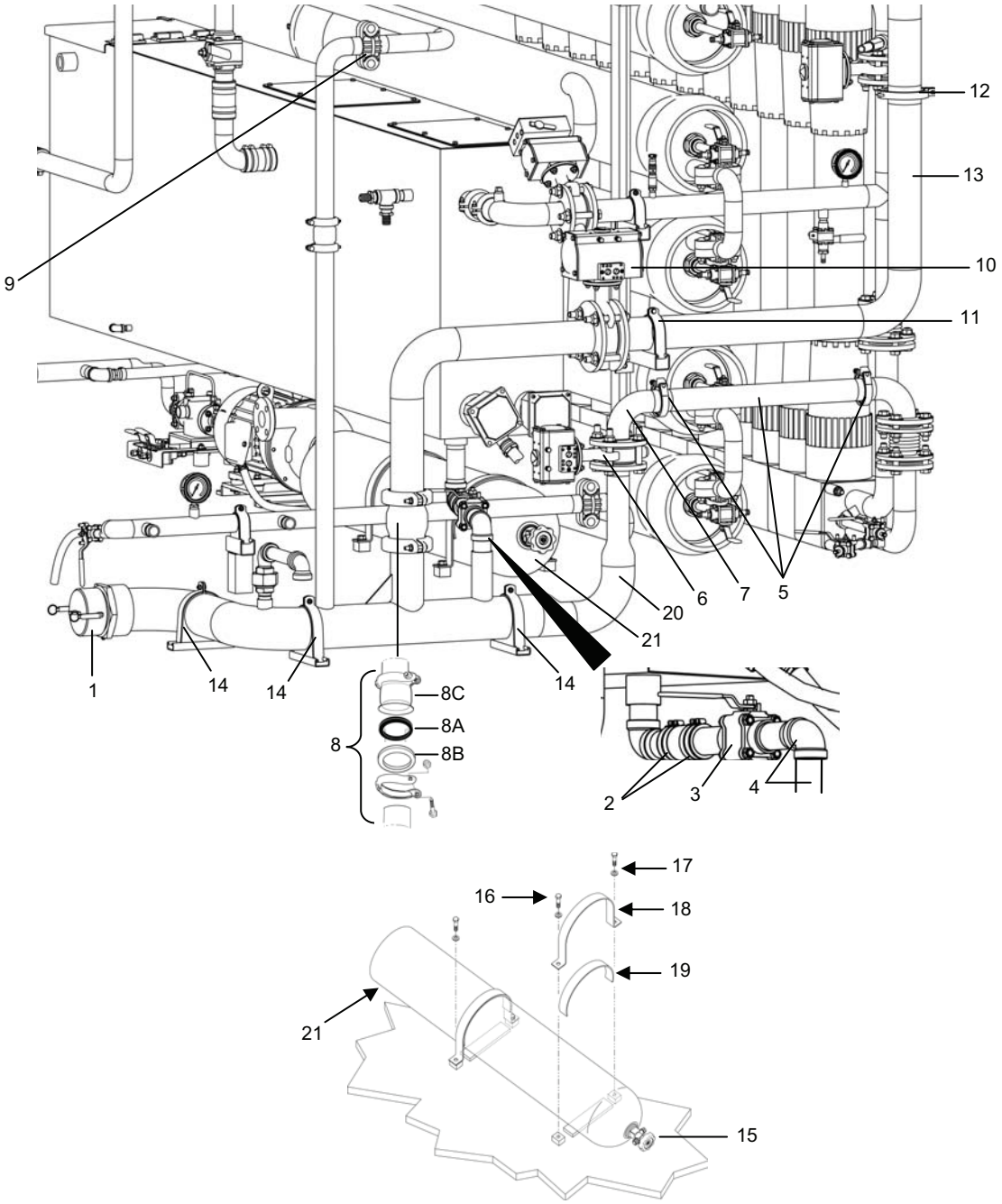

Figure 13. Waste Out Pipe Spool and Air Receiver Tank Removal.

11. Install the new air receiver tank as follows (see Figure 14).
    a. Inspect the support band rubber cushions (19) and replace if damaged or worn.
    b. Slide the new tank (21) into position under the supports bands (18).
    c. Push the tank back until it just clears the RO Feed Pump inlet pipe.
    d. Position the upper rubber cushions (19) between the tank and the support straps.

NOTE

Make sure that the air hose connector on the air tank shut off valve is horizontal to the TWPS floor and facing toward the front of the TWPS.

    e. Reinstall the bolts and washers (16 & 17) in the support straps and tighten to secure the air receiver tank to the floor of the TWPS.
    f. Connect the air hose to Air Tank Shut-Off Valve V-907 (15).
12. Reinstall the waste out pipe spool as follows (see Figure 14):
    a. Position the waste out pipe spool (20) into its original location.
    b. Reinstall but do not tighten the three flex strut pipe supports (14) that secure the waste out pipe spool to the floor of the TWPS.
    c. Slide one pipe coupling gasket retainer (8C), one gasket (8A), and the pipe joint (8C) over the 3-in. vertical waste out pipe and slide them all the way down the pipe.
    d. Slide the other gasket retainer and gasket onto the MF upper reject pipe spool.
    e. Position the MF upper shell reject pipe spool in place as follows:
        1) Install the flex strut pipe support (11) on the pipe support beam to the right of valve V-401 and slide the pipe assembly (13) onto the flex strut pipe support.
        2) Install the sanitary clamp (12) on the upper end of the MF Upper Shell Reject Pipe.
        3) Complete the 3-in. pipe coupling (8) connection on the 3-in. vertical waste out pipe, but do not tighten.
        4) Connect the air tube to the actuator for valve V-401 (10).
    f. Install the RO Feed Tank Drain Pipe assembly as follows:
        1) Install the drain elbow and nipple (4) to the 3-in. waste out pipe spool.
        2) Thread the drain pipe containing RO Feed Tank Drain Valve V-412 (3) into the drain elbow.
        3) Inspect the 2-in. rubber hose and hose clamps (2) removed earlier for wear, damage, or corrosion. Replace if needed.
        4) Lubricate the inside of the hose and the outside of the pipe sections with glycerin. Slide the four hose clamps and the 2-in. rubber hose over the ends of the RO Feed Tank Drain Pipe. Do not tighten the clamps.
    g. Connect the two open ends of the RO reject pipe spool using the grooved coupling (9).

NOTE

Make sure that the valve actuator is installed with the air tube side facing in and the valve actuator facing left.

    h. Install MF Lower Shell Out Valve V-402 (6) and pipe elbow (7) in the waste out pipe spool (21). Do not tighten.
    i. Reconnect the air tube to the valve actuator for valve V-402 (6).
    j. Inspect the sanitary clamps and gaskets (5) for wear or damage. Replace if needed.
    k. Connect the two open ends of the MF lower shell waste out pipe spool using the sanitary clamps and gaskets (5). Tighten the clamps. Tap the clamps all around to ensure that they are properly aligned and tighten again.

l. Tighten MF Lower Shell Out Valve V-402 (6) in the waste out spool.
m. Tighten the hose clamps (2) around the 2-in. rubber hose and the RO Feed Tank Drain Pipe.
n. Tighten the three flex strut pipe supports (14).

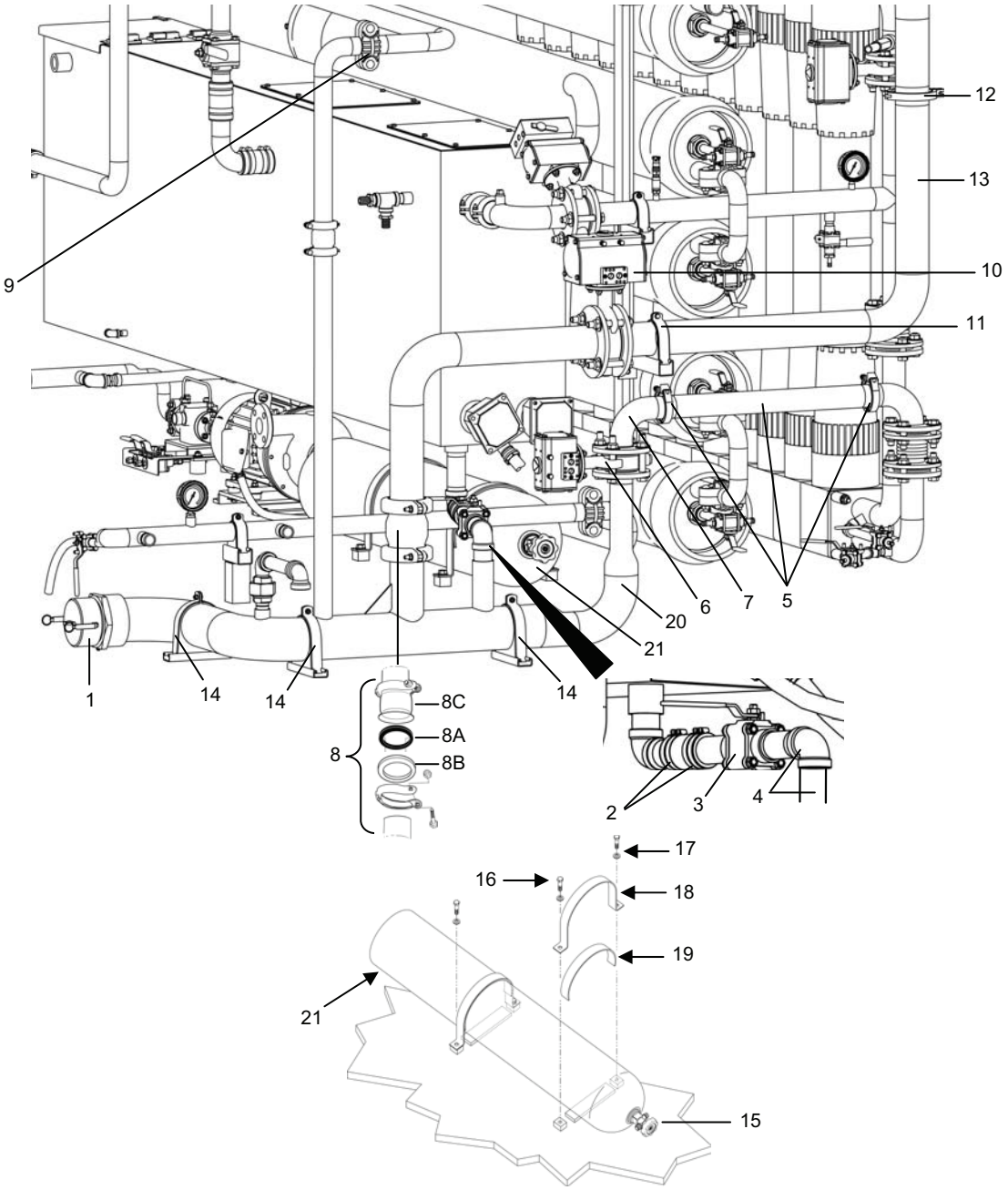

Figure 14. Waste Out Pipe Spool Installation.

13. Reinstall the High Pressure Pump Outlet Pipe Spool as follows (see Figure 15):
    a. Inspect the three grooved coupling gaskets for wear or damage. Replace if needed.
    b. Inspect the flex strut pipe support rubber cushion for wear or damage. Replace if needed.
    c. Install pressure gauge PI-301 in the left end of the HPP outlet pipe spool.
    d. Secure the left end of the High Pressure Pump Outlet Pipe Spool to the TWPS using the flex strut pipe support.
    e. Connect the right end of the High Pressure Pump Outlet Pipe Spool using the grooved coupling.
    f. Connect the two high pressure pump outlet hoses to the High Pressure Pump Outlet Pipe Spool using the two grooved couplings.
    g. Apply antiseizing tape and reinstall High Pressure Pump Inlet Drain Valve V-214 onto the High Pressure Pump Inlet Pipe Spool.

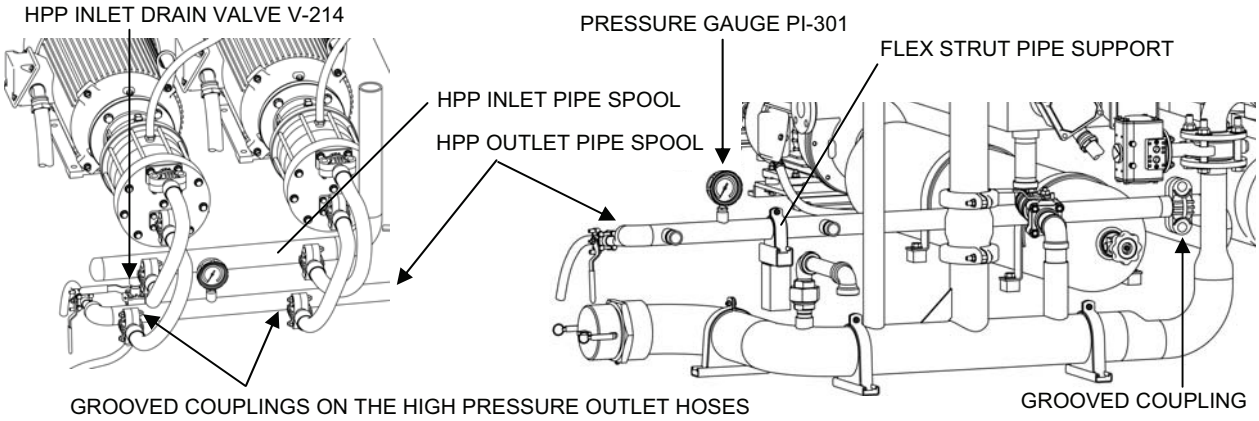

Figure 15. High Pressure Pump Outlet Pipe Spool Installation.

14. Reinstall the TWPS frame cross braces to the right end of the TWPS as follows (see Figure 16):
    a. Secure the middle of and the lower ends of the cross braces using the 6 bolts, 12 flat washers, and 6 lock nuts removed earlier.
    b. Secure the 2 upper ends of the frame cross braces at the right end of the TWPS using the 4 bolts, 4 lock washers, and 4 flat washers removed earlier.

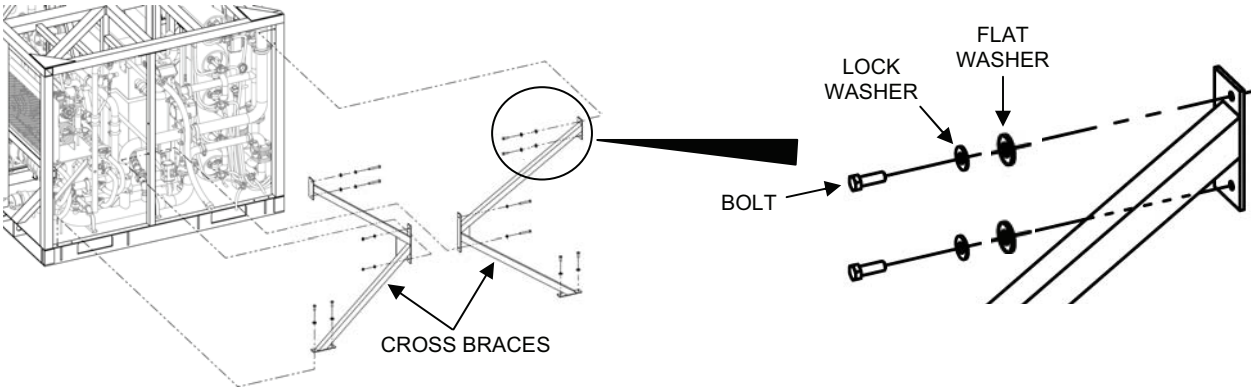

Figure 16. TWPS Frame Cross Brace Installation – Right End.

15. Reconnect the 4-in. x 5-ft. suction hose to the waste outlet.
16. Establish electrical power as described in WP 0010, TM 10-4610-309-10.
17. Start the air compressor as described in WP 0012, TM 10-4610-309-10.
18. Check the air tank shut-off valve and air hose connection at the air tank shut-off valve for leaks.
19. Start the TWPS as described in WP 0012, TM 10-4610-309-10.
20. Check all the pipe connections that were removed and reinstalled during the air receiver tank replacement procedure for leaks.

Pressure Regulating Valve PRV-901 Replacement:

Parts (TM 10-4610-309-23P):
    Pressure Regulating Valve V-901
Material:
    Tape, antiseizing (WP 0038, Table 1, item 49, 50)
    Clean, lint-free rags (WP 0038, Table 1, item 39)
Equipment Condition:
    TWPS in Standby Shutdown Without Draining Down
    Army: Generator off and TWPS main breaker off
    Marine Corps: TWPS disconnected from power source
    Entire air system bled down

WARNING

The TWPS must be in Shutdown and the TQG and TWPS main breaker must be off (Army) or the TWPS disconnected from its power source (Marine Corps) prior to performing maintenance on the TWPS Air System. Failure to observe this warning can result in injury to personnel and damage to equipment.

High pressure. The air system contains air pressure up to 1800 psig. The air system must be bled prior to performing maintenance on components of the air system. Failure to observe this warning can result in injury to personnel and damage to equipment.

Replace Pressure-Regulating Valve PRV-901 as follows:

1. Make sure the air system has been bled down. Refer to **ENTIRE AIR SYSTEM BLEED DOWN**.
2. Remove the Air System Section 1 assembly. Refer to **REPLACE** and **Air System Section 1 Assembly.**
3. Disconnect the cross tee pipes from the close nipples at both ends of Pressure Regulating Valve PRV-901 and remove the valve from the Air System Section 1 assembly (see Figure 17):

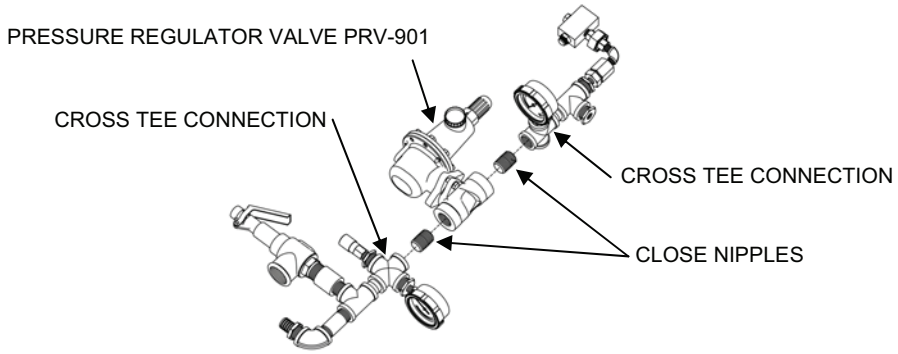

Figure 17. Pressure Regulator Valve PRV-901.

2. Place the old pressure regulating valve on a clean workbench and perform the following:
   a. Remove the two ¾-in. close nipples from both ends of the pressure-regulating valve.
   b. Clean both close nipples and install antiseizing tape on one end of nipples.
   c. Thread the taped end of the close nipples into the Pressure-Regulating Valve and tighten.
   d. Install antiseizing tape on the other ends of the close nipples.

NOTE

See Figure 17 for correct positioning of Pressure Regulating Valve PRV-901 and associated piping. Care must be taken not over-tighten. Loosening the connection once tightened could cause the connection to leak.

3. Install the pressure regulating valve onto the Air System Section 1 assembly as follows:

a. Thread the Pressure Regulating Valve and close nipple to the cross pipe that contains Pressure Gauge PI-901 (see Figure 17 for the correct positioning of the valve).
b. Thread the cross pipe that contains Pressure Gauge PI-902 into the other close nipple on the pressure-regulating valve (see Figure 17 for the correct positioning of the cross tee with Pressure Gauge PI-902).

4. Install the Air System Section 1 assembly onto the TWPS. Refer to **REPLACE** and **Air System Section 1 Assembly.**
5. Check the new Pressure Regulating Valve PRV-901 and associated piping for leaks.

Pressure Gauge PI-902 Replacement:

Parts (TM 10-4610-309-23P):
Pressure Gauge PI-902
Material:
Tape, antiseizing (WP 0038, Table 1, item 49, 50)
Equipment Condition:
TWPS in Standby Shutdown Without Draining Down
Army: Generator off and TWPS main breaker off
Marine Corps: TWPS disconnected from power source
Entire air system bled down

WARNING

The TWPS must be in Shutdown and the TQG and TWPS main breaker must be off (Army) or the TWPS disconnected from its power source (Marine Corps) prior to performing maintenance on the TWPS Air System. Failure to observe this warning can result in injury to personnel and damage to equipment.

High pressure. The air system contains air pressure up to 1800 psig. The air system must be bled prior to performing maintenance on components of the air system. Failure to observe this warning can result in injury to personnel and damage to equipment.

Replace Pressure Gauge PI-902 as follows:

NOTE
Pressure Gauge PI-902 can be replaced without removing the Air System Section 1 assembly from the TWPS.

1. Make sure the air system has been bled down. Refer to **ENTIRE AIR SYSTEM BLEED DOWN**.

2. Unscrew Pressure Gauge PI-902 from its ½-in. to ¼-in. reducer bushing (see Figure 18).
3. Clean and apply antiseizing tape to the threads of the new Pressure Gauge PI-902.
4. Thread the new pressure gauge into its reducer bushing and tighten in the position shown in Figure 18.
5. Check the new Pressure Gauge PI-902 for leaks.

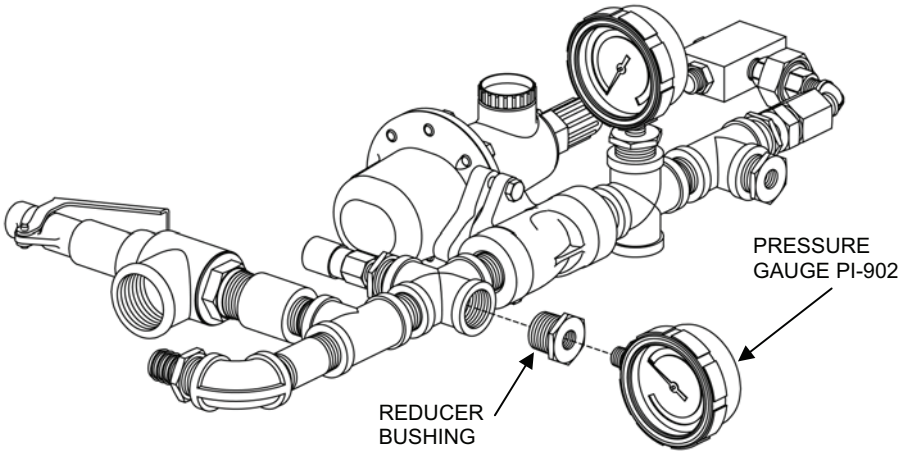

Figure 18. Pressure Gauge PI-902.

Relief Valve RV-902 Replacement:

Parts (TM 10-4610-309-23P):
Relief Valve RV-902
Material:
Tape, antiseizing (WP 0038, Table 1, item 49, 50)
Clean, lint-free rags (WP 0038, Table 1, item 39)
Equipment Condition:
TWPS in Standby Shutdown Without Draining Down
Army: Generator off and TWPS main breaker off
Marine Corps: TWPS disconnected from power source
Entire air system bled down

WARNING

The TWPS must be in Shutdown and the TQG and TWPS main breaker must be off (Army) or the TWPS disconnected from its power source (Marine Corps) prior to performing maintenance on the TWPS Air System. Failure to observe this warning can result in injury to personnel and damage to equipment.

High pressure. The air system contains air pressure up to 1800 psig. The air system must be bled prior to performing maintenance on components of the air system. Failure to observe this warning can result in injury to personnel and damage to equipment.

Replace Relief Valve RV-902 as follows:

1. Make sure the air system has been bled down. Refer to **ENTIRE AIR SYSTEM BLEED DOWN**.
2. Remove the Air System Section 1 assembly. Refer to **REPLACE** and **Air System Section 1 Assembly.**
3. Replace Relief Valve RV-902 as follows (see Figure 19):
   a. Remove Relief Valve RV-902 from the bell reducer.
   b. Remove the bell reducer from the close nipple and then remove the close nipple.

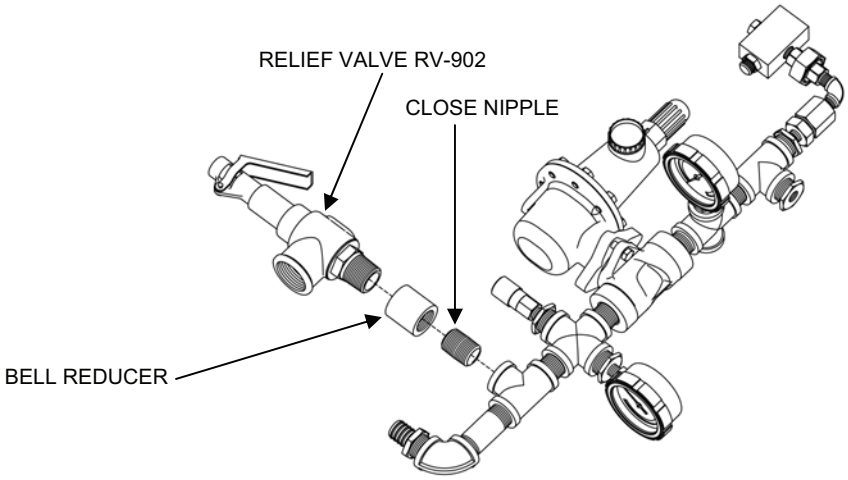

Figure 19. Relief Valve RV-902.

2. Clean the bell reducer and close nipple.
3. Install antiseizing tape to the threads of the new Relief Valve RV-902.
4. Install antiseizing tape onto both ends of the reducer bushing
5. Install the new Relief Valve RV-902 onto the bell reducer and the close nipple into the other end.
6. Tighten the relief valve in the position shown in Figure 19.
7. Install the Air System Section 1 assembly onto the TWPS. Refer to **REPLACE** and **Air System Section 1 Assembly.**
8. Check the new Relief Valve RV-902 and associated piping for leaks.

SERVICE

CO1 Oil/Water Coalescer Sintered Metal Filter Service:

Parts (TM 10-4610-309-24P):
Sintered Metal Filter
Equipment Condition:
TWPS in Standby Shutdown Without Draining Down
Army: Generator off and TWPS main breaker off
Marine Corps: TWPS disconnected from power source
High pressure air system bled down

WARNING

The TWPS must be in Shutdown and the TQG and TWPS main breaker must be off (Army) or the TWPS disconnected from its power source (Marine Corps) prior to performing maintenance on the TWPS Air System. Failure to observe this warning can result in injury to personnel and damage to equipment.

High pressure. The air system contains air pressure up to 1800 psig. The air system must be bled prior to performing maintenance on components of the air system. Failure to observe this warning can result in injury to personnel and damage to equipment.

Remove and clean or replace the oil/water coalescer sintered metal filter as follows:

1. Make sure the high-pressure air system has been bled down. Refer to **HIGH-PRESSURE AIR SYSTEM BLEED DOWN**.
2. Remove the CO1 oil/water coalescer sintered metal filter as follows (see Figure 20):
   a. Disconnect the hoses from the coalescer.
   b. Unscrew the filter head from the filter body.
   c. Unscrew the sintered metal filter from the filter head.
3. Clean or replace the sintered metal filter.
4. Reassemble the CO1oil/water coalescer sintered metal filter as follows:
   a. Screw the sintered metal filter into the filter head
   b. Screw the CO1 coalescer filter head into the filter body.
   c. Connect the hoses to the coalescer.

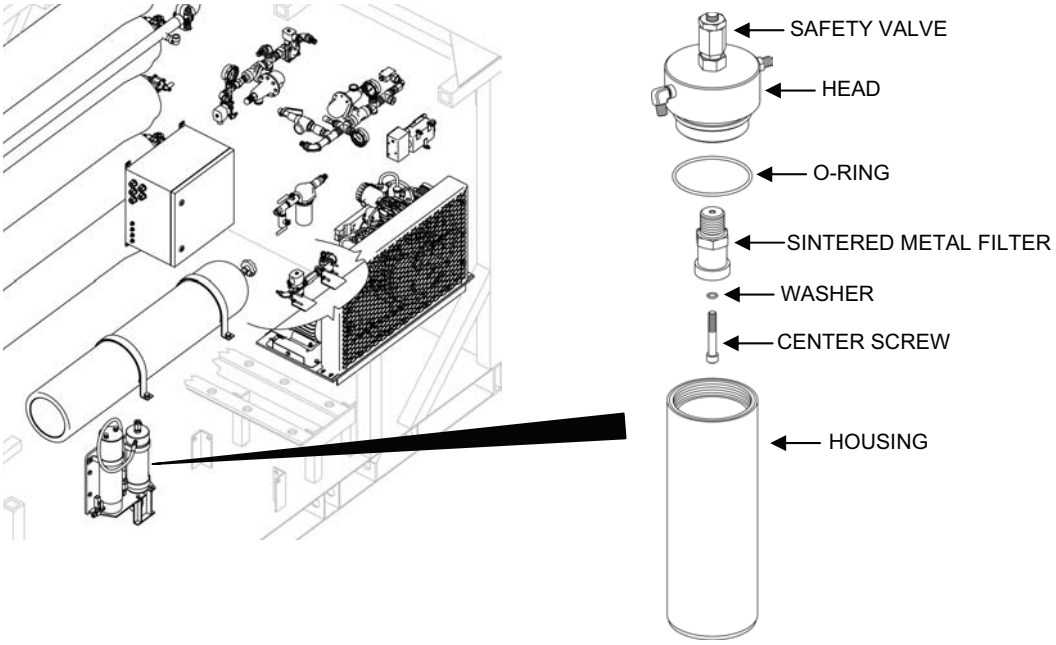

Figure 20. Coalescer CO1 Sintered Metal Filter.

END OF WORK PACKAGE

TACTICAL WATER PURIFICATION SYSTEM (TWPS) FIELD MAINTENANCE PROCEDURES AIR SYSTEM, REDUCED PRESSURE

0016 00

THIS SECTION COVERS:
Replace

INITIAL SETUP:

Maintenance Level
Field
Tools
Army: General Mechanic's Tool Kit (WP 0037)
Marine Corps: Common No. 1 Tool Set (WP 0037)
Materials/Parts:
Refer to TM 10-4610-309-23P for repair parts information
Personnel Required
One
Equipment Condition
TWPS in Standby Shutdown Without Draining Down
Army: Generator off and TWPS main breaker off
Marine Corps: TWPS disconnected from power source
Entire air system bled down

GENERAL:

This work package contains information and instructions for replacing pressure regulators, solenoid valves and relief valves, hoses and piping in the Reduced Pressure Air System of the TWPS. The procedures covered in this work package include, in order:

- Entire Air System Bleed Down Procedures
- Air System Section 3 Assembly Replacement
- Solenoid Valve XV-901 Replacement
- Pressure Regulating Valve PRV-902 Replacement
- Pressure Gauge PI-903, 0-30 psig Replacement
- Solenoid Valve XV-903 Replacement
- Air System Section 4 Assembly Replacement
- Solenoid Valve XV-902 Replacement
- Check Valve V-908 Replacement
- Air System Section 6 Assembly Replacement
- Oil/Water Coalescer CO2 Replacement
- Manifold Maintenance Shutoff Valve V-909 Replacement
- Vent Valve V-910 Replacement
- Air System Air Hose Assemblies Replacement

All air system repair procedures in this work package, except for gauge replacement will be performed off the TWPS.

ENTIRE AIR SYSTEM BLEED DOWN PROCEDURES

WARNING

The TWPS must be in Shutdown and the TQG and TWPS main breaker must be off (Army) or the TWPS disconnected from its power source (Marine Corps) prior to performing maintenance on the TWPS Air System. Failure to observe this warning can result in injury to personnel and damage to equipment.

High pressure. The air system contains air pressure up to 1800 psig. The air system must be bled prior to performing maintenance on components of the air system. Failure to observe this warning can result in injury to personnel and damage to equipment.

Bleed the entire air system as follows:

1. Make sure TWPS is in Standby Shutdown without Draining Down (WP 0013, TM 10-4610-309-10).
2. Bleed the entire air system as follows (see Figure 1 for valve location):
   a. Stop the air compressor by switching the Air Compressor control at the OCP to OFF.
   b. Close Air Receiver Tank Shut-Off Valve V-907.
   c. Make sure that Low Pressure Air Shut Off Valve V-909 is open.
   d. **Slowly** open Low Pressure Air Vent Valve V-910 to bleed the air from the air system.
   e. **Slowly** open High Pressure Air Vent Valve V-904.

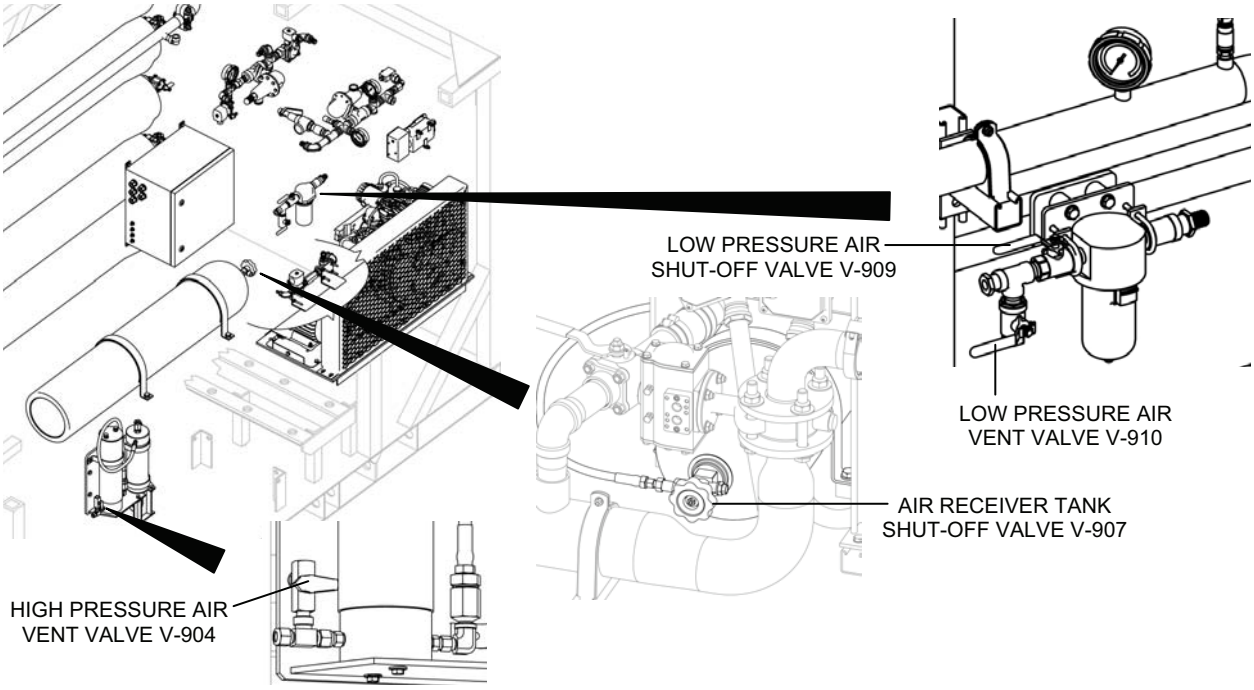

Figure 1. Valves for Bleeding the Entire Air System.

REPLACE

Air System Section 3 Assembly Replacement:

Parts (TM 10-4610-309-24P):
Air System Section 3 Assembly
Material Required:
Tape, antiseizing (WP 0038, Table 1, item 49, 50)
Personnel Required:
Two
Equipment Condition:
TWPS in Standby Shutdown Without Draining Down
Army: Generator off and TWPS main breaker off
Marine Corps: TWPS disconnected from power source
Entire air system bled down

WARNING

The TWPS must be in Shutdown and the TQG and TWPS main breaker must be off (Army) or the TWPS disconnected from its power source (Marine Corps) prior to performing maintenance on the TWPS Air System. Failure to observe this warning can result in injury to personnel and damage to equipment.

High pressure. The air system contains air pressure up to 1800 psig. The air system must be bled prior to performing maintenance on components of the air system. Failure to observe this warning can result in injury to personnel and damage to equipment.

Replace the Air System Section 3 assembly as follows:

1. Make sure the air system has been bled down. Refer to **ENTIRE AIR SYSTEM BLEED DOWN**.
2. Remove the air system section 3 assembly as follows (see Figure 2):
   a. Tag and disconnect the air supply hose from the Air System Section 3 assembly.
   b. Tag and disconnect the hose from the Section 3 outlet that goes to CO2 coalescer.
   c. Tag and disconnect the hose from the Section 3 outlet that goes to MF Assembly Check Valve V-911.
   d. Tag and disconnect the hose from the Section 3 outlet that goes to the Air System Section 4 assembly Solenoid Valve XV-902.
   e. Tag and disconnect the hose from the Section 3 outlet that goes to the Air System Section 4 tee pipe.
   f. Tag and disconnect the electrical wiring from Solenoid Valve XV-901.
   g. Tag and disconnect the electrical wiring from Solenoid Valve XV-903.
   h. Cut the tie-wrap on the PT-201 HP pump inlet pressure transmitter cable from Air System Section 3 Assembly.

CAUTION

Two people are required to safely remove the Air System Section 3 assembly from the TWPS. Failure to observe this warning may result in damage to equipment.

i. With another person holding the Air System Section 3 assembly, remove the two U-bolts, four self-locking nuts, and four flat washers that attach the assembly to the TWPS.
j. Remove the Section 3 assembly from the TWPS and place on a clean workbench.

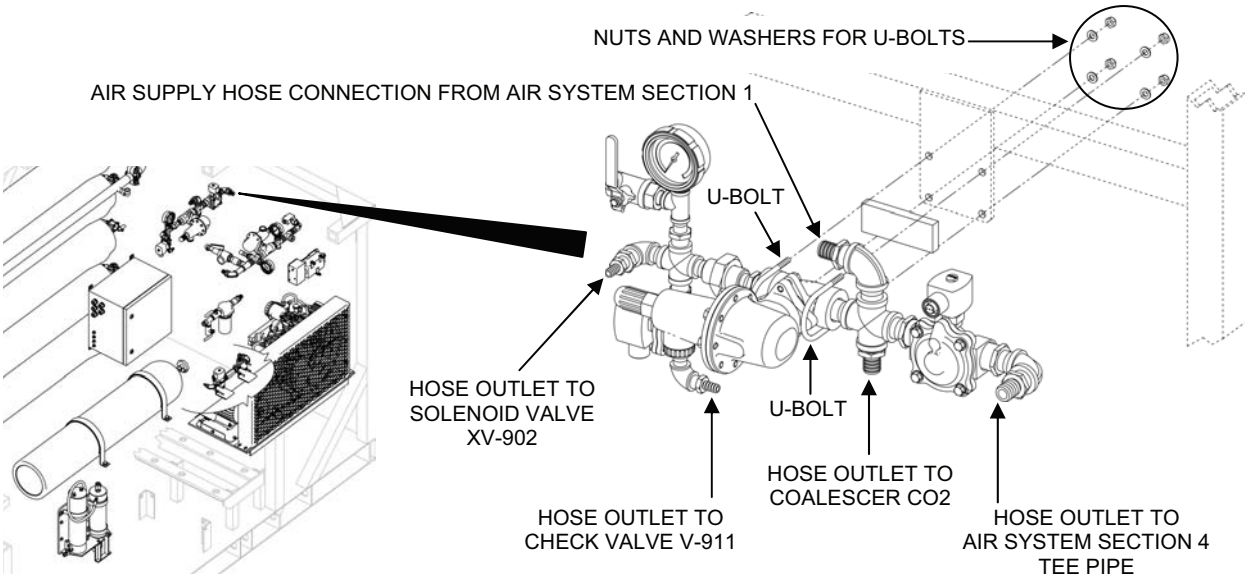

Figure 2. Air System Section 3 Assembly.

3. Install the new Air System Section 3 assembly onto the TWPS as follows (see Figure 2):
   a. With another person supporting the Air System Section 3 assembly, secure the assembly to the TWPS using the two U-bolts, four self-locking nuts, and four flat washers.
   b. Connect the electrical wiring to Solenoid Valves XV-901and XV-903.
   c. Clean the hose fitting threads for the hoses that were disconnected from Section 3.
   d. Apply anti-seize tape to the threads of the hose fitting and connect the hose from MF Assembly Check Valve V-911 to the Air System Section 3 assembly.
   e. Apply anti-seize tape to the threads of the hose fitting and connect the hose from the Solenoid Valve XV-902 in the Air System Section 4 assembly to the Air System Section 3 assembly.
   f. Apply anti-seize tape to the threads of the hose fitting and connect t the hose from the Air System Section 4 tee pipe to the Air System Section 3 assembly.
   g. Apply anti-seize tape to the threads of the hose fitting and connect the hose from CO2 Coalescer to the Air System Section 3 assembly.
   h. Apply anti-seize tape to the threads of the hose fitting and connect the air supply hose from Air System Section 1 to the Air System Section 3 assembly.
4. Start the compressor and check the Air System Section 3 assembly for leaks.

Solenoid Valve XV-901 Replacement:

Parts:
Solenoid Valve XV-901 (TM 10-4610-309-24P)
Material:
Tape, antiseizing (WP 0038, Table 1, item 49, 50)
Equipment Condition:
TWPS in Standby Shutdown Without Draining Down
Army: Generator off and TWPS main breaker off
Marine Corps: TWPS disconnected from power source
Entire air system bled down

WARNING

The TWPS must be in Shutdown and the TQG and TWPS main breaker must be off (Army) or the TWPS disconnected from its power source (Marine Corps) prior to performing maintenance on the TWPS Air System. Failure to observe this warning can result in injury to personnel and damage to equipment.

High pressure. The air system contains air pressure up to 1800 psig. The air system must be bled prior to performing maintenance on components of the air system. Failure to observe this warning can result in injury to personnel and damage to equipment.

Replace Solenoid Valve XV-901 as follows:

1. Make sure the air system has been bled down. Refer to **ENTIRE AIR SYSTEM BLEED DOWN**.
2. Remove the Air System Section 3 assembly from the TWPS. Refer to **REPLACE** and **Air System Section 3 Assembly**.
3. Remove the Solenoid Valve XV-901 from the Air System Section 3 assembly as follows (see Figure 3):
    a. Disconnect Solenoid Valve XV-901 at the cross connection.
    b. Disconnect the two 1-in. to ¾-in. reducer bushings and the two ¾-in. close nipples from Solenoid Valve XV-901.
    c. Disconnect the ¾-in., 90-degree elbow from the ¾- in. close nipple that attaches to the reducer bushings.

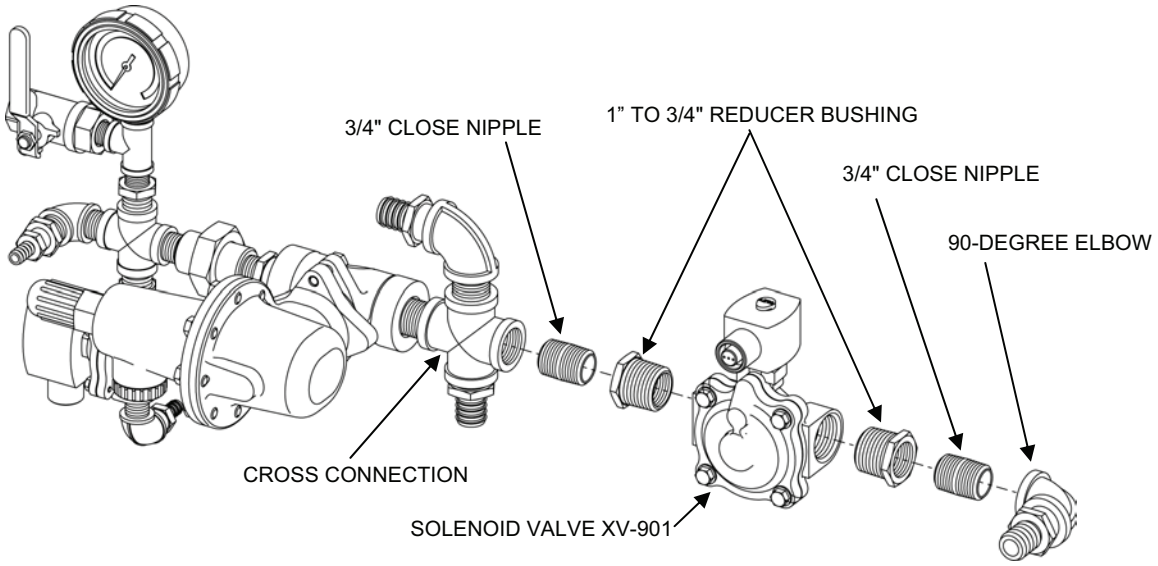

Figure 3. Solenoid Valve XV-901.

4. Place the old Solenoid Valve XV-901 on a clean workbench and perform the following:
   a. Clean all the disassembled parts.
   b. Apply antiseizing tape to both ends of the close nipples and to the reducer bushings.
5. Install the new Solenoid Valve XV-901 to the Air System Section 3 assembly as follows:
   a. Thread one of the reducer bushings and close nipples into the Solenoid Valve XV-901.
   b. Thread the ¾-in., 90-degree elbow onto the close nipple. Do not over-tighten.
   c. Make sure that the position of the elbow matches Figure 3.
   d. Thread the other ¾-in. close nipple and reducer bushing into the other end of the Solenoid Valve XV-901 and the cross connection. Do not over-tighten.
   e. Make sure that the position of Solenoid Valve XV-901 matches Figure 3.
6. Install the Air System Section 3 assembly onto the TWPS. Refer to **REPLACE** and **Air System Section 3 Assembly**.
7. Check the new Solenoid Valve XV-901and attached piping for leaks.

Pressure Regulating Valve PRV-902 Replacement:

Parts:
Pressure Regulating Valve PRV-902 (TM 10-4610-309-23P)
Material:
Tape, antiseizing (WP 0038, Table 1, item 49, 50)
Equipment Condition:
TWPS in Standby Shutdown Without Draining Down
Army: Generator off and TWPS main breaker off
Marine Corps: TWPS disconnected from power source
Entire air system bled down

WARNING

The TWPS must be in Shutdown and the TQG and TWPS main breaker must be off (Army) or the TWPS disconnected from its power source (Marine Corps) prior to performing maintenance on the TWPS Air System. Failure to observe this warning can result in injury to personnel and damage to equipment.

High pressure. The air system contains air pressure up to 1800 psig. The air system must be bled prior to performing maintenance on components of the air system. Failure to observe this warning can result in injury to personnel and damage to equipment.

Replace Pressure Regulating Valve PRV-902 as follows:

1. Make sure the air system has been bled down. Refer to **ENTIRE AIR SYSTEM BLEED DOWN**.
2. Remove the Air System Section 3 assembly from the TWPS. Refer to **REPLACE** and **Air System Section 3 Assembly**.
3. Remove Pressure-Regulating Valve PRV-902 from the Air System Section 3 assembly as follows (see Figure 4):
   a. Disconnect the pressure regulating valve from the assembly at the pipe union.
   b. Disconnect the pressure regulating valve from the cross tee connection.

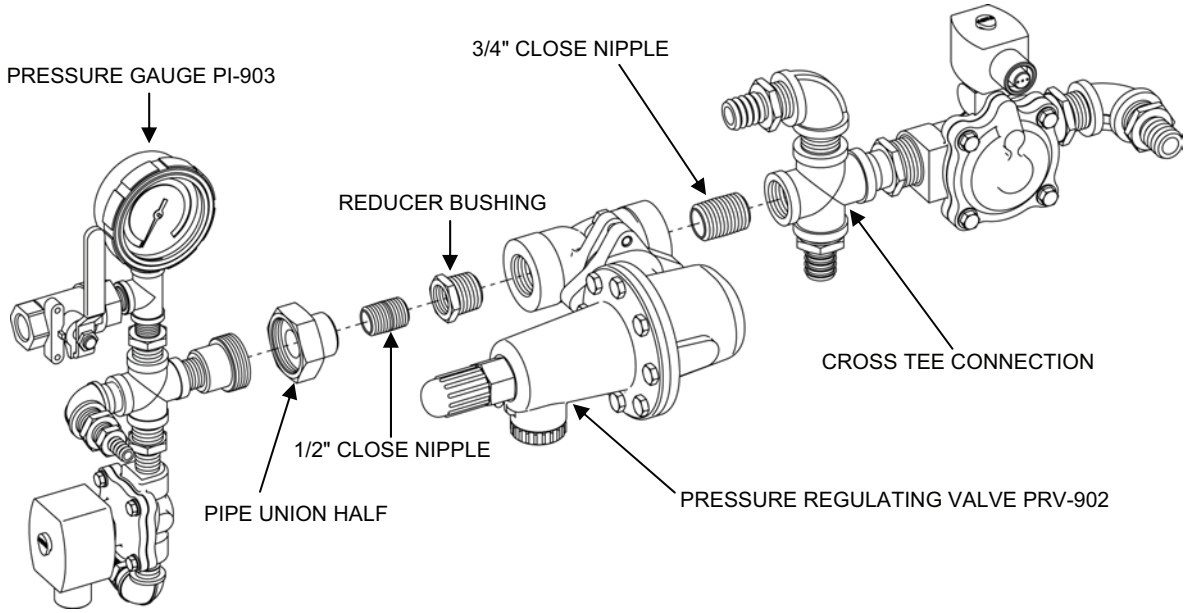

Figure 4. Pressure Regulating Valve PRV-902.

4. Place the old pressure regulating valve on a clean workbench and perform the following:
   a. Remove the ½-in. close nipple, the reducer bushing and pipe union half and ¾-in. close nipple from the ends of PRV-902.
   b. Clean all parts.

c. Apply antiseizing tape to both ends of the close nipples and the threaded end of the reducer bushing.
d. Thread the ¾-in. close nipple into the cross tee connection.

5. Install the new pressure regulating valve onto the Air System Section 3 assembly as follows:
   a. Thread the input side of the new pressure-regulating valve onto the ¾-in close nipple at the cross tee connection. Do not over-tighten.
   b. Make sure that the position of the new pressure-regulating valve matches that shown in Figure 4.
   c. Thread the pipe union half, ½-in. close nipple, and the reducer bushing together.
   d. Thread the reducer bushing into the other end of the new pressure-regulating valve and tighten.
   e. Thread the part of the Section 3 assembly that contains Pressure Gauge PI-903 onto the pipe union on the pressure regulating valve.
   f. Make sure the position of all components match Figure 4.
6. Install the Air System Section 3 assembly onto the TWPS. Refer to **REPLACE** and **Air System Section 3 Assembly**.
7. Check the new pressure regulating valve and attached piping for leaks.

Pressure Gauge PI-903, 0-30 psig Replacement:

Parts:
Pressure Gauge PI-903 (TM 10-4610-309-23P)
Material:
Tape, antiseizing (WP 0038, Table 1, item 49, 50)
Equipment Condition:
TWPS in Standby Shutdown Without Draining Down
Army: Generator off and TWPS main breaker off
Marine Corps: TWPS disconnected from power source
Entire air system bled down

WARNING

The TWPS must be in Shutdown and the TQG and TWPS main breaker must be off (Army) or the TWPS disconnected from its power source (Marine Corps) prior to performing maintenance on the TWPS Air System. Failure to observe this warning can result in injury to personnel and damage to equipment.

High pressure. The air system contains air pressure up to 1800 psig. The air system must be bled prior to performing maintenance on components of the air system. Failure to observe this warning can result in injury to personnel and damage to equipment.

NOTE

The pressure gauge PI-903 can be replaced with out removing the air system 100 and 15 psig MF backwash components from the TWPS.

Replace Pressure Gauge PI-903 as follows:

1. Make sure the air system has been bled down. Refer to **ENTIRE AIR SYSTEM BLEED DOWN**.
2. Unscrew Pressure Gauge PI-903 from its pipe tee (see Figure 5):
3. Clean and apply antiseizing tape to the threads of the new Pressure Gauge PI-903.
4. Thread the new pressure gauge into the pipe tee and tighten in the position shown in Figure 5.
5. Check the new Pressure Gauge PI-903 for leaks.

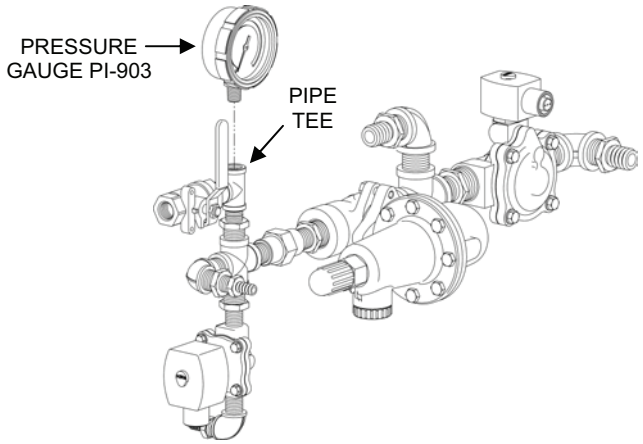

Figure 5. Pressure Gauge PI-903.

Solenoid Valve XV-903 Replacement:

Parts:
Solenoid Valve XV-903 (TM 10-4610-309-23P)
Material:
Tape, antiseizing (WP 0038, Table 1, item 49, 50)
Equipment Condition:
TWPS in Standby Shutdown Without Draining Down
Army: Generator off and TWPS main breaker off
Marine Corps: TWPS disconnected from power source
Entire air system bled down

WARNING

The TWPS must be in Shutdown and the TQG and TWPS main breaker must be off (Army) or the TWPS disconnected from its power source (Marine Corps) prior to performing maintenance on the TWPS Air System. Failure to observe this warning can result in injury to personnel and damage to equipment.

High pressure. The air system contains air pressure up to 1800 psig. The air system must be bled prior to performing maintenance on components of the air system. Failure to observe this warning can result in injury to personnel and damage to equipment.

Replace Solenoid Valve XV-903 as follows:

1. Make sure the air system has been bled down. Refer to **ENTIRE AIR SYSTEM BLEED DOWN**.
2. Remove the Air System Section 3 assembly from the TWPS. Refer to **REPLACE** and **Air System Section 3 Assembly**.
3. Remove Solenoid Valve XV-903 from the Air System Section 3 assembly as follows (see Figure 6):
    a. Disconnect the reducer bushing on Solenoid Valve XV-903 from the cross tee.
    b. Disconnect the reducer bushing, the two 3/8-in. close nipples, and the 3/8-in., 90-degree elbow from Solenoid Valve XV-903.

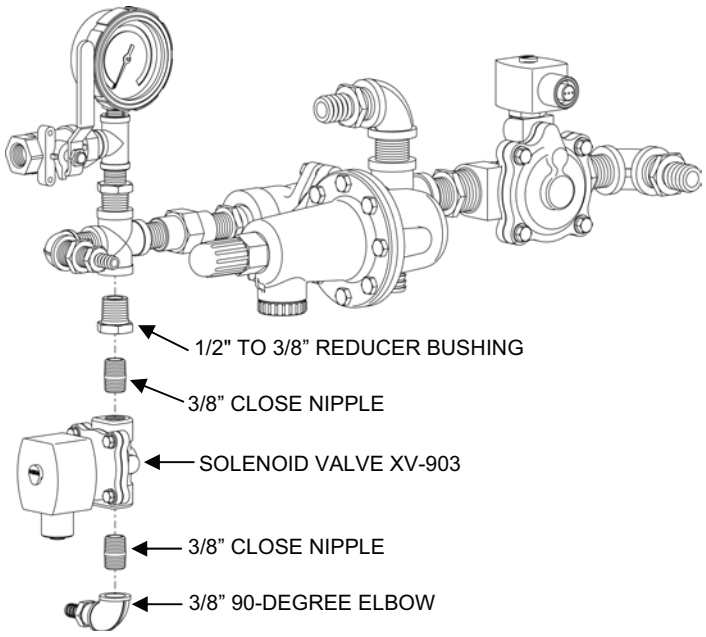

Figure 6. Solenoid Valve XV-903.

4. Place old Solenoid Valve XV-903 on a clean workbench and perform the following:
    a. Clean all disassembled parts.
    b. Apply antiseizing tape to both ends of the two close nipples and the external threads of the reducer bushing.
5. Install the new Solenoid Valve XV-903 in the Air System Section 3 assembly as follows:
    a. Thread the two 3/8” close nipples onto the solenoid valve hand tight.
    b. Thread the 1/2" to 3/8” reducer bushing into the cross tee and tighten.
    c. Thread the close nipple on the input side of the valve into the reducer bushing but do not over-tighten. Refer to Figure 6 for correct positioning of the valve.
    d. Thread the 3/8” elbow to the close nipple on the other end of the solenoid valve but do not over-tighten. Refer to Figure 6 for correct positioning of the elbow.
6. Install the Air System Section 3 assembly onto the TWPS. Refer to **REPLACE** and **Air System Section 3 Assembly**.
7. Check the new Solenoid Valve XV-903 and attached piping for leaks.

Air System Section 4 Assembly Replacement:

Parts (TM 10-4610-309-24P):
Air System Section 4 Assembly
Material Required:
Tape, antiseizing (WP 0038, Table 1, item 49, 50)
Personnel Required:
Two
Equipment Condition:
TWPS in Standby Shutdown Without Draining Down
Army: Generator off and TWPS main breaker off
Marine Corps: TWPS disconnected from power source
Entire air system bled down

WARNING

The TWPS must be in Shutdown and the TQG and TWPS main breaker must be off (Army) or the TWPS disconnected from its power source (Marine Corps) prior to performing maintenance on the TWPS Air System. Failure to observe this warning can result in injury to personnel and damage to equipment.

High pressure. The air system contains air pressure up to 1800 psig. The air system must be bled prior to performing maintenance on components of the air system. Failure to observe this warning can result in injury to personnel and damage to equipment.

Replace the Air System Section 4 assembly as follows:

1. Make sure the air system has been bled down. Refer to **ENTIRE AIR SYSTEM BLEED DOWN**.
2. Remove the Air System Section 4 assembly as follows (see Figure 7):
   a. Tag and disconnect the hose from Solenoid Valve XV-902.
   b. Tag and disconnect the electrical wiring from the solenoid valve.
   c. Tag and disconnect the hose coming from the Air System Section 3 assembly from the tee in Air System Section 4.
   d. Tag and disconnect the hose from the Section 4 outlet that goes to MF Check Valve V-912.

CAUTION

Two people are required to safely remove the air system section 4 assembly from the TWPS. Failure to observe this warning may result in damage to the equipment.

   e. With another person holding the Air System Section 4 assembly, disconnect the three U-bolts, 6 flat washers, and 6 self-locking nuts that attach the assembly to the TWPS.
   f. Remove the Air System Section 4 assembly from the TWPS and place it on a clean workbench.

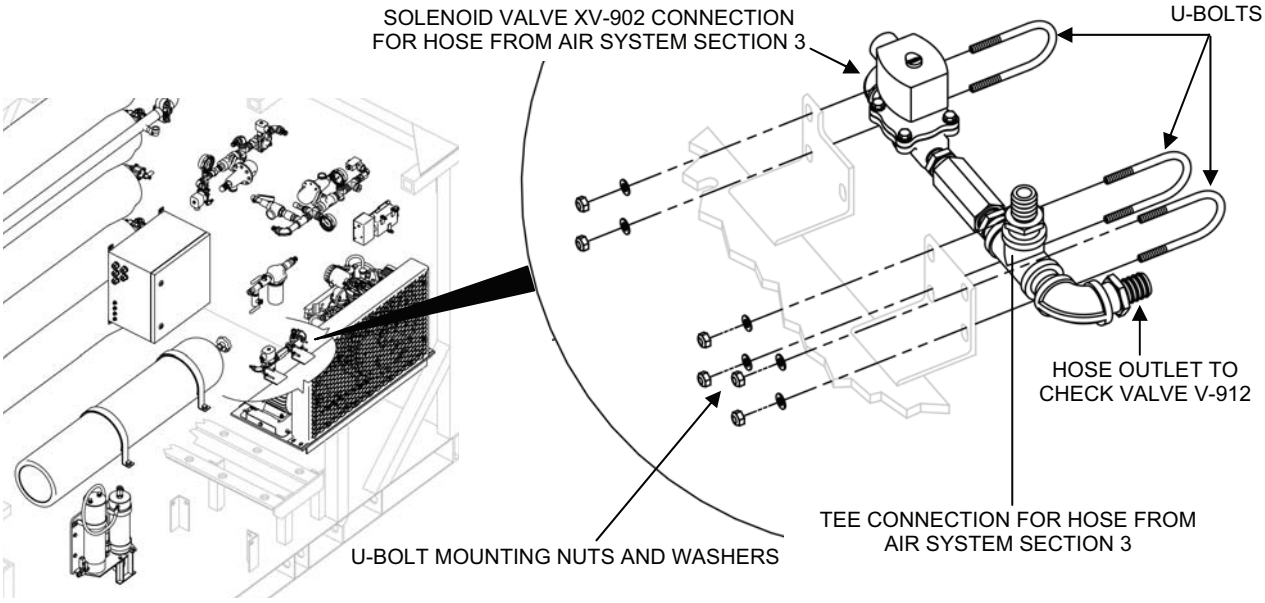

Figure 7. Air System Section 4 Assembly.

4. Install the new Air System Section 4 assembly onto the TWPS as follows (see Figure 7):
    a. With another person supporting the Air System Section 4 assembly, secure the assembly to the TWPS using the three U-bolts, 6 flat washers, and 6 self-locking nuts.
    b. Clean the hose fitting threads for the hoses that were disconnected from Section 4.
    c. Apply anti-seize tape to the threads of the hose fitting the hose from MF Check Valve V-912 to the Air System Section 4 assembly.
    d. Apply anti-seize tape to the threads of the hose fitting the hose from the Air System Section 3 assembly to the tee in the Air System Section 4 assembly.
    e. Apply anti-seize tape to the threads of the hose fitting the hose from the Air System Section 3 assembly to Solenoid Valve XV-902.
    f. Apply anti-seize tape to the threads of the hose fitting the electrical wiring to Solenoid Valve XV-902.
6. Start the compressor and check the Air System Section 4 assembly for leaks.

Solenoid Valve XV-902 Replacement:

Parts:
Solenoid Valve XV-902 (TM 10-4610-309-23P)
Material:
Tape, antiseizing (WP 0038, Table 1, item 49, 50)
Equipment Condition:
TWPS in Standby Shutdown Without Draining Down
Army: Generator off and TWPS main breaker off
Marine Corps: TWPS disconnected from power source
Entire air system bled down

WARNING

The TWPS must be in Shutdown and the TQG and TWPS main breaker must be off (Army) or the TWPS disconnected from its power source (Marine Corps) prior to performing maintenance on the TWPS Air System. Failure to observe this warning can result in injury to personnel and damage to equipment.

High pressure. The air system contains air pressure up to 1800 psig. The air system must be bled prior to performing maintenance on components of the air system. Failure to observe this warning can result in injury to personnel and damage to equipment.

Replace Solenoid Valve XV-902 as follows:

1. Make sure the air system has been bled down. Refer to **ENTIRE AIR SYSTEM BLEED DOWN**.
2. Remove the Air System Section 4 assembly from the TWPS. Refer to **REPLACE** and **Air System Section 4 Assembly**.
3. Remove Solenoid Valve XV-902 from the Air System Section 4 assembly as follows (see Figure 8):
    a. Disconnect Solenoid Valve XV-902, the close nipple and reducer bushing from Check Valve V-908.
    b. Disconnect the reducer bushing, the two close nipples, and the elbow from Solenoid Valve XV-902.

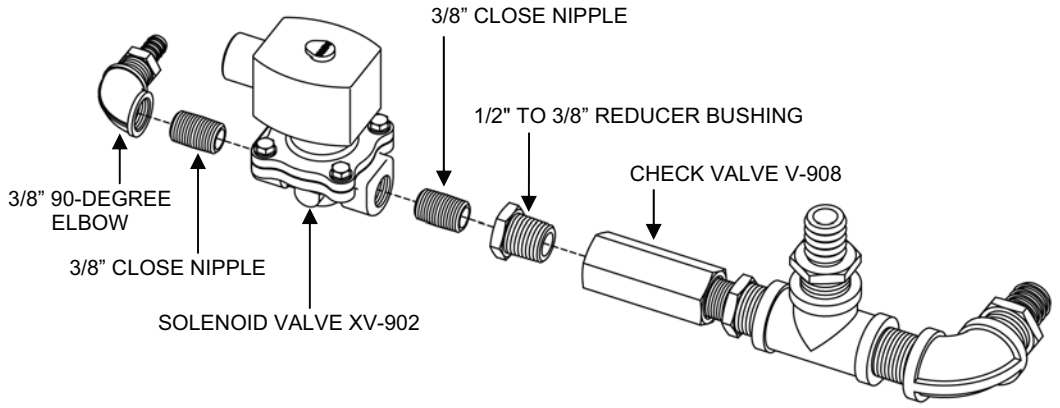

Figure 8. Solenoid Valve XV-902.

2. Place the old solenoid valve on a clean workbench and perform the following
    a. Clean all disassembled parts.
    b. Apply antiseizing tape to both ends of the two close nipples and to the external threads of the reducer bushing.

3. Install the new Solenoid Valve XV-902 as follows:
    a. Thread the two close nipples onto the solenoid valve hand tight.
    b. Thread the reducer bushing into the input side of Check Valve V-908 and tighten.
    c. Thread the close nipple on the output side of the solenoid valve into the reducer bushing. Do not over-tighten. Refer to Figure 8 for correct positioning of the valve.
    d. Thread the elbow onto the close nipple on the other end of the solenoid valve. Do not over-tighten. Refer to Figure 8 for correct positioning of the elbow.
4. Install the Air System Section 4 assembly onto the TWPS. Refer to **REPLACE** and **Air System Section 4 Assembly**.
5. Check the new Solenoid Valve XV-902 and attached piping for leaks.

Check Valve V-908 Replacement:

Parts:
Check Valve V-908 (TM 10-4610-309-23P)
Material:
Tape, antiseizing (WP 0038, Table 1, item 49, 50)
Equipment Condition:
TWPS in Standby Shutdown Without Draining Down
Army: Generator off and TWPS main breaker off
Marine Corps: TWPS disconnected from power source
Entire air system bled down

WARNING

The TWPS must be in Shutdown and the TQG and TWPS main breaker must be off (Army) or the TWPS disconnected from its power source (Marine Corps) prior to performing maintenance on the TWPS Air System. Failure to observe this warning can result in injury to personnel and damage to equipment.

High pressure. The air system contains air pressure up to 1800 psig. The air system must be bled prior to performing maintenance on components of the air system. Failure to observe this warning can result in injury to personnel and damage to equipment.

Replace Check Valve V-908 as follows:

1. Make sure the air system has been bled down. Refer to **ENTIRE AIR SYSTEM BLEED DOWN**.
2. Remove the Air System Section 4 assembly from the TWPS. Refer to **REPLACE** and **Air System Section 4 Assembly**.
3. Remove Check Valve V-908 from the air system section 4 assembly as follows (see Figure 9):
    a. Disconnect Check Valve V-908 from the reducer bushings at the ends of the check valve.
    b. Remove the close nipple from the check valve.

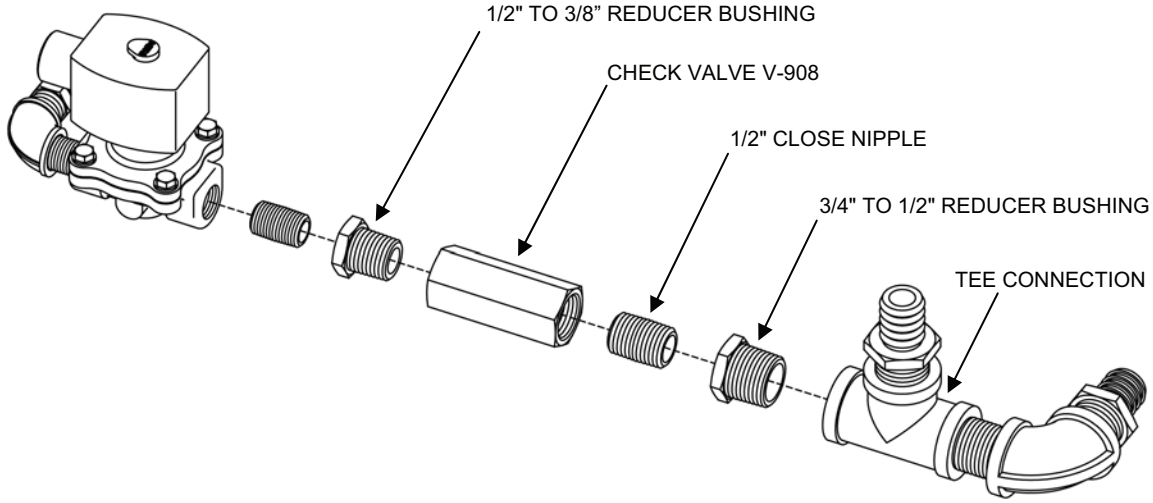

Figure 9. Check Valve V-908.

4. Place old Check Valve V-908 on a clean workbench and perform the following
   a. Clean all disassembled parts
   b. Apply pipe tape to both ends of the close nipple and the external threads of the reducer bushing.
5. Install new Check Valve V-908 as follows:
   a. Thread the close nipple onto the check valve hand tight.
   b. Thread the ½-in. to 3/8-in. reducer bushing onto the input side of Check Valve V-908 and tighten.
   c. Thread the close nipple on the output side of the check valve into the other reducer bushing. Do not over-tighten. Refer to Figure 9 for correct positioning of the Air System Section 4 assembly components.
6. Install the Air System Section 4 assembly onto the TWPS. Refer to **REPLACE** and **Air System Section 4 Assembly**.
7. Check new Check Valve V-908 and attached piping for leaks.

Air System Section 6 Assembly Replacement:

Parts:
Air System Section 6 Assembly (TM 10-4610-309-24P)
Equipment Condition:
TWPS in Standby Shutdown Without Draining Down
Army: Generator off and TWPS main breaker off
Marine Corps: TWPS disconnected from power source
Entire air system bled down

WARNING

The TWPS must be in Shutdown and the TQG and TWPS main breaker must be off (Army) or the TWPS disconnected from its power source (Marine Corps) prior to performing maintenance on the TWPS Air System. Failure to observe this warning can result in injury to personnel and damage to equipment.

High pressure. The air system contains air pressure up to 1800 psig. The air system must be bled prior to performing maintenance on components of the air system. Failure to observe this warning can result in injury to personnel and damage to equipment.

Replace the Air System Section 6 assembly as follows:

1. Make sure the air system has been bled down. Refer to **ENTIRE AIR SYSTEM BLEED DOWN**.
2. Remove the Air System Section 6 assembly as follows (see Figure 10):
   a. Tag and disconnect the hose from the reducer coupling at the inlet to CO2.
   b. Tag and disconnect the hose from the reducer coupling at the valve end of Section 6.

CAUTION

Two people are required to safely remove the Air System Section 6 assembly from the TWPS. Failure to observe this warning may result in damage to equipment.

   c. With another person holding the Air System Section 6 assembly, disconnect the mounting hardware that attach the assembly to the TWPS.
   d. Remove the assembly from the TWPS and place it on a clean workbench.

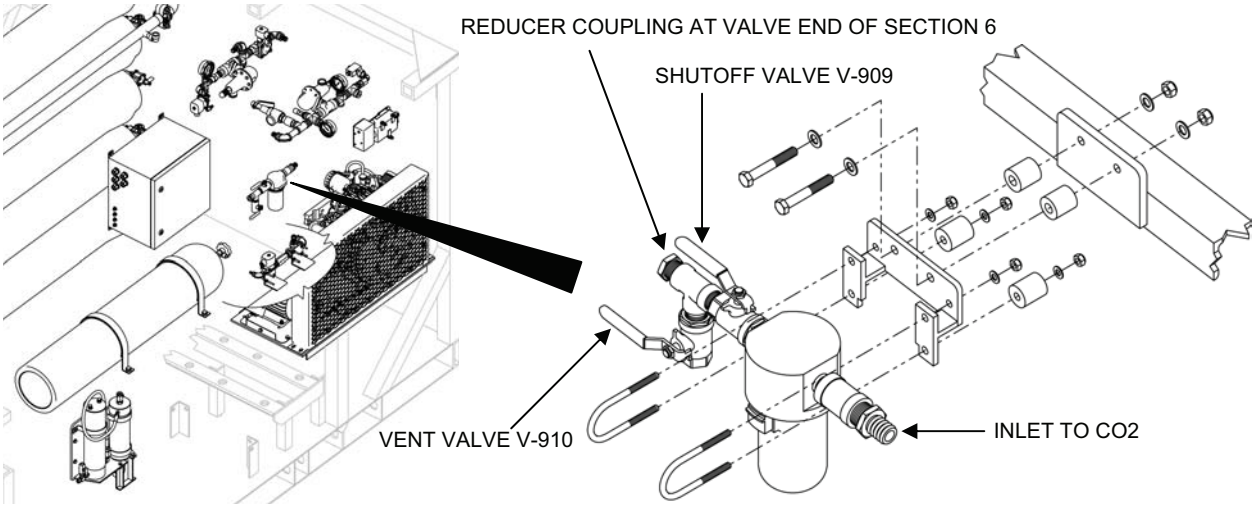

Figure 10. Air System Section 6 Assembly.

3. Install the new Air System Section 6 assembly onto the TWPS as follows:
    a. With another person supporting the Air System Section 6 assembly, secure the assembly to the TWPS using the mounting hardware. Refer to Figure 10 for the proper installation of the hardware.
    b. Connect the hose to the reducer coupling at the valve end of the Air System Section 6 assembly.
    c. Connect the hose to the reducer coupling at the inlet of CO2.
4. Check the Air System Section 6 assembly for leaks.

Oil/Water Coalescer CO2 Replacement:

Parts:
Oil/Water Coalescer CO2 (TM 10-4610-309-23P)
Material:
Tape, antiseizing (WP 0038, Table 1, item 49, 50)
Equipment Condition:
TWPS in Standby Shutdown Without Draining Down
Army: Generator off and TWPS main breaker off
Marine Corps: TWPS disconnected from power source
Entire air system bled down

WARNING

The TWPS must be in Shutdown and the TQG and TWPS main breaker must be off (Army) or the TWPS disconnected from its power source (Marine Corps) prior to performing maintenance on the TWPS Air System. Failure to observe this warning can result in injury to personnel and damage to equipment.

High pressure. The air system contains air pressure up to 1800 psig. The air system must be bled prior to performing maintenance on components of the air system. Failure to observe this warning can result in injury to personnel and damage to equipment.

Replace Oil/Water Coalescer CO2 as follows:

1. Make sure the air system has been bled down. Refer to **ENTIRE AIR SYSTEM BLEED DOWN**.
2. Remove the Air System Section 6 assembly from the TWPS. Refer to **REPLACE** and **Air System Section 6 Assembly**.
3. Disconnect the coalescer from the ½-in. by 1½-in. nipple that connects the coalescer to Shutoff Valve V-909 (see Figure 11).
4. Place old Oil/Water Coalescer CO2 on a clean workbench and perform the following:
    a. Remove the two ½-in. nipples and the reducer coupling from the coalescer.
    b. Clean all disassembled parts.
    c. Apply pipe tape to both ends of the close nipples.

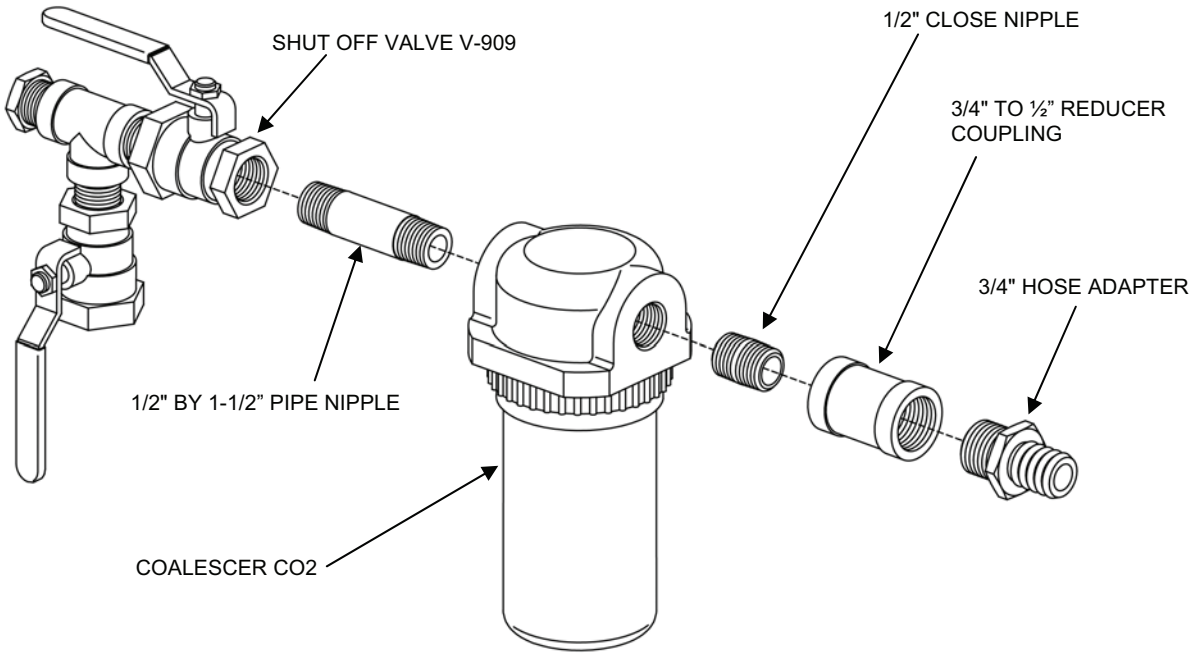

Figure 11. Oil/Water Coalescer CO2.

5. Install new Oil/Water Coalescer CO2 as follows:
    a. Thread the two nipples into the coalescer hand tight.
    b. Thread the ¾-in to ½-in. reducer coupling onto the close nipple and tighten.
    c. Thread Shut-Off Valve V-909 onto the ½-in. by 1½-in. pipe nipple. Do not over-tighten. Refer to Figure 11 for correct positioning of the valve and coalescer.
6. Install the Air System Section 6 assembly onto the TWPS. Refer to **REPLACE** and **Air System Section 6 Assembly**.
7. Check the new Oil/Water Coalescer CO2 and attached piping for leaks.

Manifold Maintenance Shutoff Valve V-909 Replacement:

Parts:
Shutoff Valve V-909 (TM 10-4610-309-23P)
Material:
Tape, antiseizing (WP 0038, Table 1, item 49, 50)
Equipment Condition:
TWPS in Standby Shutdown Without Draining Down
Army: Generator off and TWPS main breaker off
Marine Corps: TWPS disconnected from power source
Entire air system bled down

WARNING

The TWPS must be in Shutdown and the TQG and TWPS main breaker must be off (Army) or the TWPS disconnected from its power source (Marine Corps) prior to performing maintenance on the TWPS Air System. Failure to observe this warning can result in injury to personnel and damage to equipment.

High pressure. The air system contains air pressure up to 1800 psig. The air system must be bled prior to performing maintenance on components of the air system. Failure to observe this warning can result in injury to personnel and damage to equipment.

Replace Shutoff Valve V-909 as follows:

1. Make sure the air system has been bled down. Refer to **ENTIRE AIR SYSTEM BLEED DOWN**.
2. Remove the Air System Section 6 assembly from the TWPS. Refer to **REPLACE** and **Air System Section 6 Assembly**.
3. Disconnect Shutoff Valve V-909 from the 1/2" pipe nipple that connects the shutoff valve to the coalescer (see Figure 12).

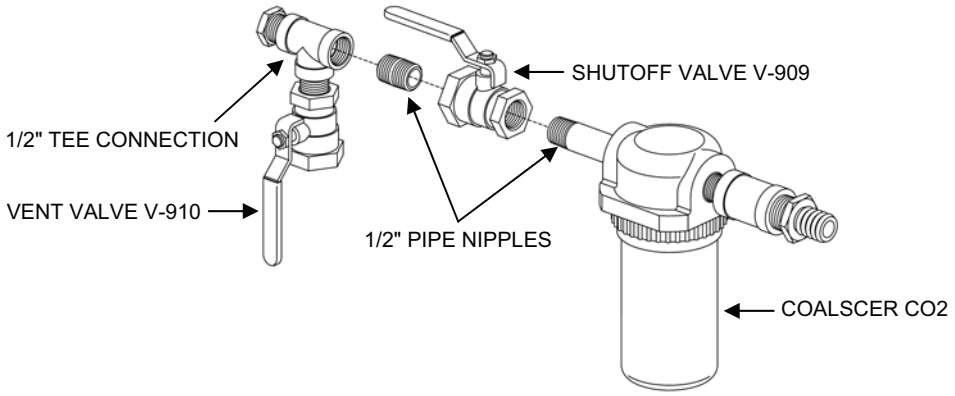

Figure 12. Shutoff Valve V-909.

4. Place old Shutoff Valve V-909 on a clean workbench and perform the following:
   a. Remove the two ½-in. pipe nipples. Clean all disassembled parts.
   b. Apply antiseizing tape to both ends of the two pipe nipples.
5. Install new Shutoff Valve V-909 as follows:
   a. Thread the two ½-in. nipples into both sides of Shutoff Valve V-909 and tighten hand tight.
   b. Thread Shutoff Valve V-909 onto the oil/water coalescer and tighten.
   c. Refer to Figure 12 for the correct positioning of Shutoff Valve V-909.
6. Install the Air System Section 6 assembly onto the TWPS. Refer to **REPLACE** and **Air System Section 6 Assembly**.
7. Check new Shutoff Valve V-909 and attached piping for leaks.

Vent Valve V-910 Replacement:

Parts:
Vent Valve V-910 (TM 10-4610-309-23P)
Material:
Tape, antiseizing (WP 0038, Table 1, item 49, 50)
Equipment Condition:
TWPS in Standby Shutdown Without Draining Down
Army: Generator off and TWPS main breaker off
Marine Corps: TWPS disconnected from power source
Entire air system bled down

WARNING

The TWPS must be in Shutdown and the TQG and TWPS main breaker must be off (Army) or the TWPS disconnected from its power source (Marine Corps) prior to performing maintenance on the TWPS Air System. Failure to observe this warning can result in injury to personnel and damage to equipment.

High pressure. The air system contains air pressure up to 1800 psig. The air system must be bled prior to performing maintenance on components of the air system. Failure to observe this warning can result in injury to personnel and damage to equipment.

Replace Vent Valve V-910 as follows:

1. Make sure the air system has been bled down. Refer to **ENTIRE AIR SYSTEM BLEED DOWN**.
2. Remove the Air System Section 6 assembly from the TWPS. Refer to **REPLACE** and **Air System Section 6 Assembly**.
3. Disconnect Vent Valve V-910 from the ½-in. tee that is also connected to Shutoff Valve V-909 (see Figure 13):

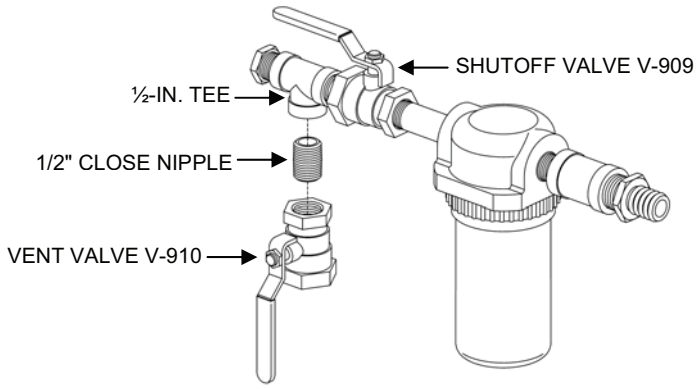

Figure 13. Vent Valve V-910.

4. Place old Vent Valve V-910 on a clean workbench and perform the following:
    a. Remove the ½-in. close nipple from Vent Valve V-910.
    b. Clean all disassembled parts.
    c. Apply antiseizing tape to both ends of the close nipple.
5. Install new Vent Valve V-910 as follows:
    a. Thread the ½-in. close nipple into the tee.
    b. Thread Vent Valve V-910 onto the close nipple and tighten.
    c. Refer to Figure 13 for the correct positioning of Vent Valve V-910.
6. Install the Air System Section 6 assembly onto the TWPS. Refer to **REPLACE** and **Air System Section 6 Assembly**.
7. Check new Vent Valve V-910 and attached piping for leaks.

Air System Air Hose Assemblies Replacement:

Refer to WP 0043, TM 10-4610-309-10, General Operator Maintenance Procedures, or WP 0027, General Field Maintenance Procedures, for the procedures for replacing hoses and tubing.

END OF WORK PACKAGE

TACTICAL WATER PURIFICATION SYSTEM (TWPS) FIELD MAINTENANCE PROCEDURES AIR COMPRESSOR

0017 00

THIS SECTION COVERS
Replace, Service

INITIAL SETUP

Maintenance Level
Field
Tools
Army: General Mechanic's Tool Kit (WP 0037)
Marine Corps: Common No. 1 Tool Set (WP 0037)
Pressure Gauge, 0 – 1000 psig (WP 0037, Table 2, item 6)
References
Refer to TM 10-4610-309-23P for repair parts information
Personnel Required
One (except where noted)
Equipment Condition
TWPS in Standby Shutdown Without Draining Down
Army TWPS: Generator off and TWPS main breaker off
Marine Corps TWPS: TWPS disconnected from power source

GENERAL

This work package provides procedures for replacing and servicing components and assemblies of the Air Compressor Assembly. These procedures include:

- Drive Motor Replacement
- Oil Pressure Regulator Replacement
- High-Pressure Air System Bleed Down Procedures
- Air Compressor Replacement
- Oil Pump Replacement
- First Stage Valve Head Assembly Replacement
- Second Stage Valve Head Assembly Replacement
- Third Stage Valve Head Assembly Replacement
- Temperature Switch Replacement
- Compressor Drive Belt Replacement
- Compressor Belt Tension Adjustment
- Intermediate Filter Service
- Compressor Oil Change
- Bleed the Lubrication System (Vent the Oil Pump)

All procedures except replacing the drive motor, air compressor and oil pump, can be performed without removing the compressor or motor from its mounting.

REPLACE

Drive Motor Replacement:

Parts (TM 10-4610-309-23P):
Drive motor
Material:
Glycerin (BII) (WP 0038, Table 1, item 24)
Clean, dry, lint-free rags (WP 0038, Table 1, item 39)
Equipment Condition:
TWPS in Standby Shutdown Without Draining Down
Army TWPS: Generator off and TWPS main breaker off
Marine Corps TWPS: TWPS disconnected from power source

WARNING

The TWPS must be in Shutdown and the TQG and TWPS main breaker must be off (Army) or the TWPS disconnected from its power source (Marine Corps) prior to performing maintenance on the TWPS Air Compressor. Failure to observe this warning can result in injury to personnel and damage to equipment.

Replace the air compressor drive motor as follows:

1. Make sure that electrical power to the TWPS has been shut off.
2. Remove the air compressor drive belt guard and drive belt as follows:
    a. Remove the two bolts, flat washers, lock washers, and the rectangular plate on the back of the belt guard assembly at the compressor end.
    b. Remove the bolt, flat washer, lock washer, and clamp that secure the compressor temperature switch wiring to the back of the belt guard assembly.
    c. Remove the two bolts, flat washers, and lock washers that attach the belt guard assembly to the center bracket.
    d. Remove the four bolts, flat washers, and lock washers that attach the belt guard assembly to the compressor base.
    e. Remove the belt guard assembly.
    f. Loosen the four drive motor mounting nuts.
    g. Loosen the belt adjustment bolt (turn it counterclockwise) and slide the drive motor toward the compressor to loosen the belt.
    h. Remove the belt.

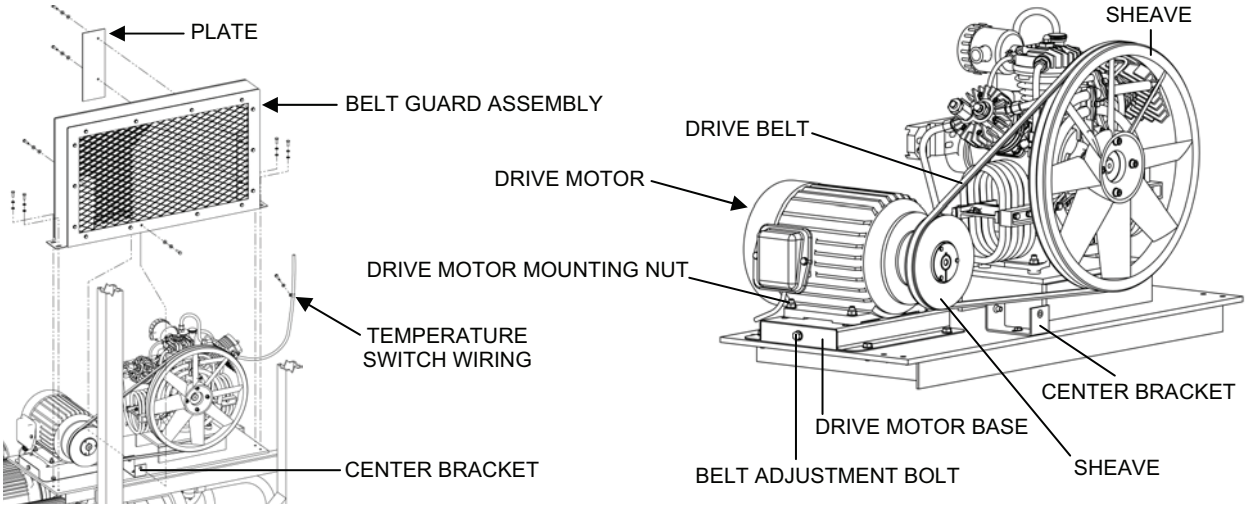

Figure 1. Compressor Drive Belt Guard and Drive Belt Removal.

3. Remove the drive motor as follows (see Figure 2):
   a. Remove the motor junction box cover. Tag and disconnect the wiring to the motor.

WARNING

Two person lift. Two people are required to remove the drive motor. Lift with your legs, not your back. Failure to observe this warning can result in injury to personnel and damage to equipment.

   b. Remove the four nuts, flat washers, and lock washers that secure the drive motor to the motor base and remove the motor.

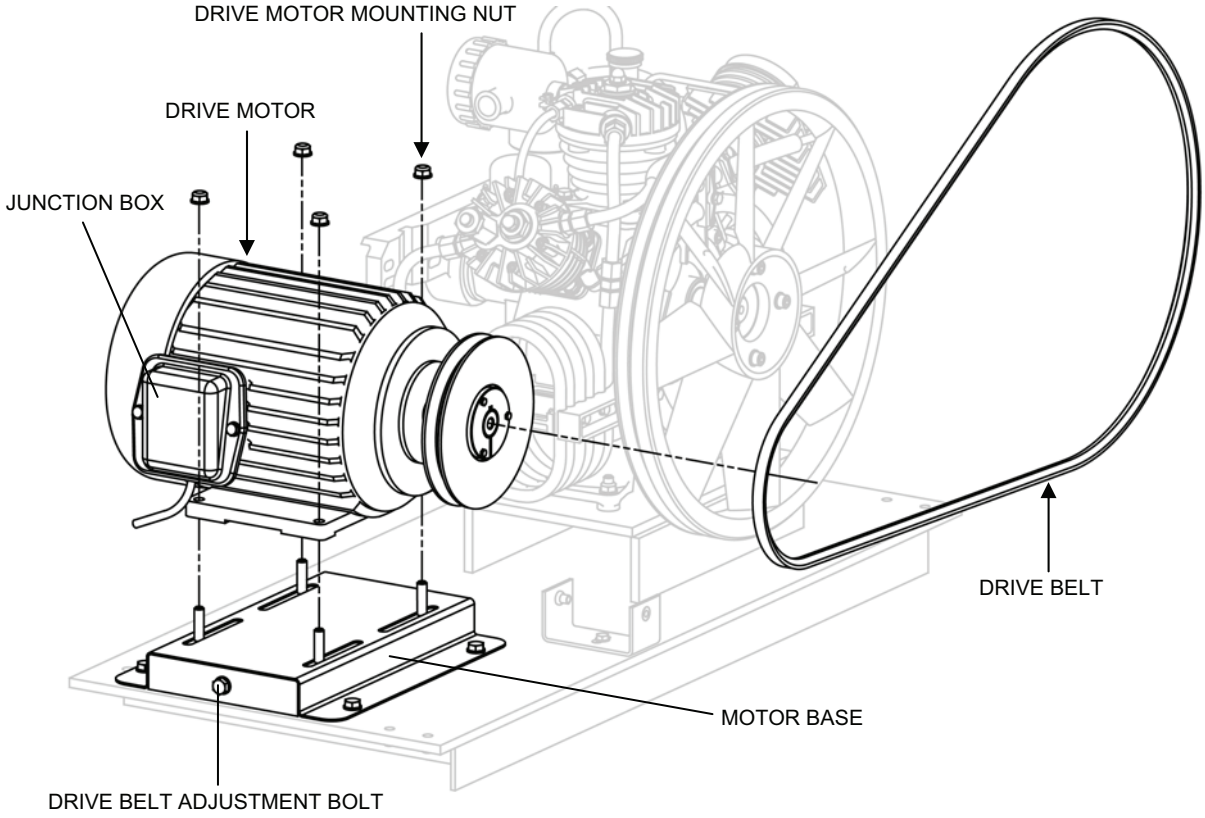

Figure 2. Drive Motor Removal.

4. Clean the motor base and inspect it for damage. Replace if necessary.
5. Inspect the air compressor for rust, corrosion, loose or missing hardware, damaged wires/parts and oil leaks.
6. Lubricate the belt adjustment bolt and base plate attaching hardware with glycerin. Wipe off any excess glycerin.
7. Install the new drive motor as follows:
    a. Install the motor on the motor base, but do not tighten the mounting nuts.
    b. Install the drive belt on the motor and compressor sheaves.
    c. Turn the belt adjustment bolt clockwise until the belt has about ¼ -in. deflection when pressing down hard in the center of the belt with your thumb.
    d. Tighten the drive motor mounting nuts.
    e. Install the belt guard assembly and reattach the wiring clamp and rectangular plate (see Figure 1).
    f. Connect the electrical wiring to the motor and install the junction box cover.
8. Start the compressor and check the new drive motor for proper operation.

Oil Pressure Regulator Replacement:

Parts (TM 10-460-309-24P):
Oil pressure regulator
Test Equipment:
Pressure gauge, 0-1000 psig (WP 0037, Table 2, item 6)
Equipment Condition:
TWPS in Standby Shutdown Without Draining Down
Army TWPS: Generator off and TWPS main breaker off
Marine Corps TWPS: TWPS disconnected from power source

WARNING

The TWPS must be in Shutdown and the TQG and TWPS main breaker must be off (Army) or the TWPS disconnected from its power source (Marine Corps) prior to performing maintenance on the TWPS Air Compressor. Failure to observe this warning can result in injury to personnel and damage to equipment.

Replace and adjust the oil pressure regulator as follows:

1. Make sure that electrical power to the TWPS has been shut off.
2. Remove the oil pressure regulator as follows (see Figure 3):
   a. Disconnect the top and bottom tubing connections.
   b. Remove the top left and bottom right cap screws. Do not remove the other two.
   c. Remove the regulator.

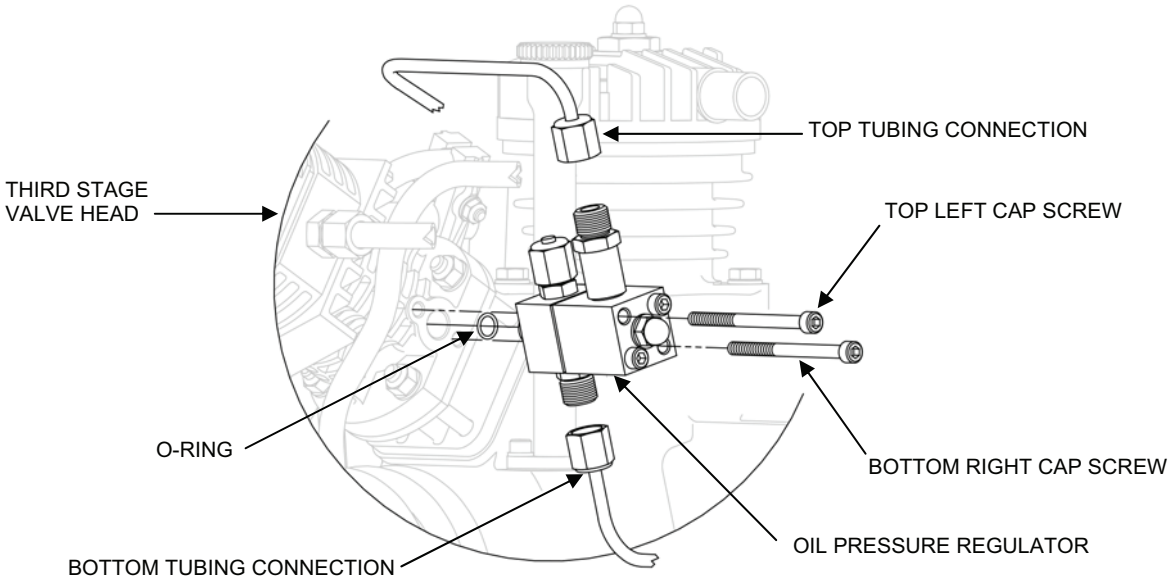

Figure 3. Oil Pressure Regulator Removal.

3. Inspect the regulator mounting for dirt and damage.
4. Install the new regulator and secure with the two cap screws.
5. Connect the top and bottom tubing connections.
6. Adjust the new regulator as follows (see Figure 4):

NOTE

Turn the regulator adjusting screw clockwise to increase pressure or counterclockwise to decrease pressure.

a. Remove the gauge port cap.
b. Install the 0-1000 psig pressure gauge to the gauge port of the regulator.
c. Remove the cap nut and washer.
d. With the compressor running, set the regulator pressure to 850 ± 70 psig.
e. Install the washer and cap nut.
f. Stop the compressor, remove the pressure gauge, and reinstall the cap on the gauge port.

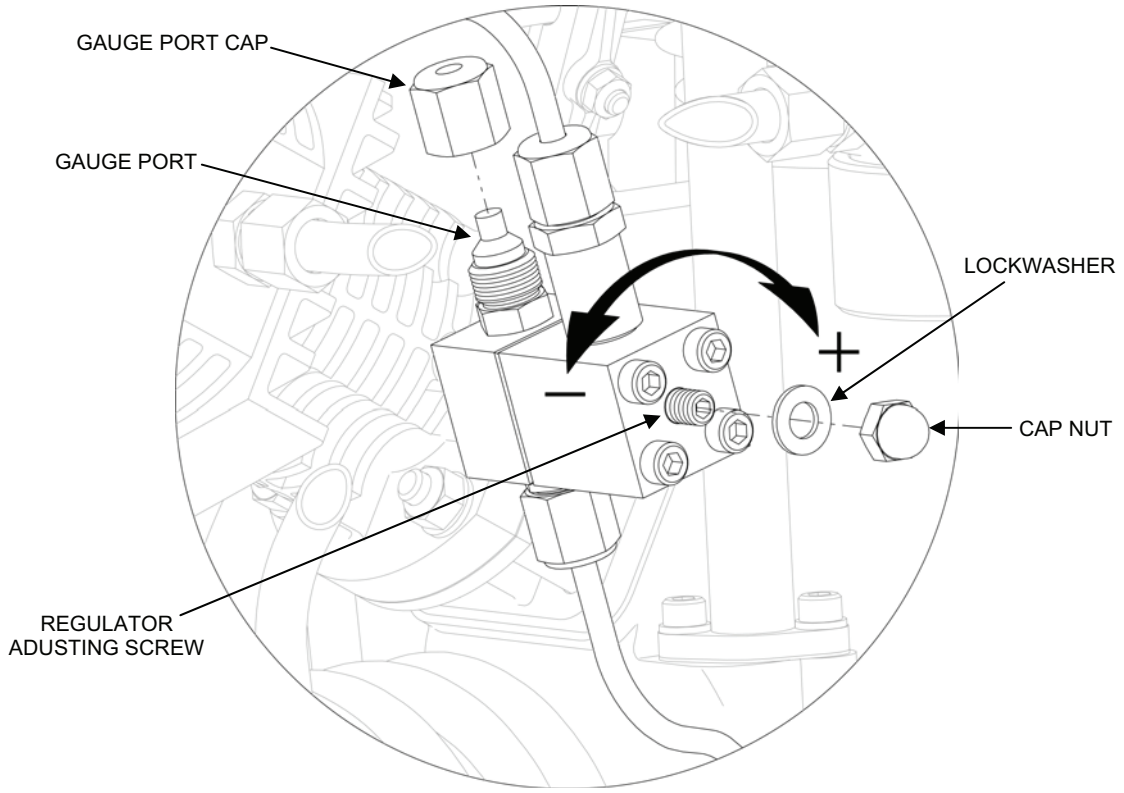

Figure 4. Oil Pressure Regulator Adjustment.

High Pressure Air System Bleed Down Procedures:

WARNING

The TWPS must be in Shutdown and the TQG and TWPS main breaker must be off (Army) or the TWPS disconnected from its power source (Marine Corps) prior to performing maintenance on the TWPS Air Compressor. Failure to observe this warning can result in injury to personnel and damage to equipment.

High pressure. The air system contains air pressure up to 1800 psig. The high pressure air system must be bled prior to performing maintenance on some of the components of the air compressor. Failure to observe this warning can result in injury to personnel and damage to equipment.

Bleed the high-pressure air system as follows:

1. Make sure TWPS is in Standby Shutdown without Draining Down (WP 0015, TM 10-4610-309-10).
2. Bleed the high pressure air system as follows (see Figure 5 for valve location):
   a. Switch the Air Compressor control at the OCP to OFF.
   b. **Slowly** open High Pressure Air Vent Valve V-904 to bleed the air from the high-pressure system. Then close the valve.

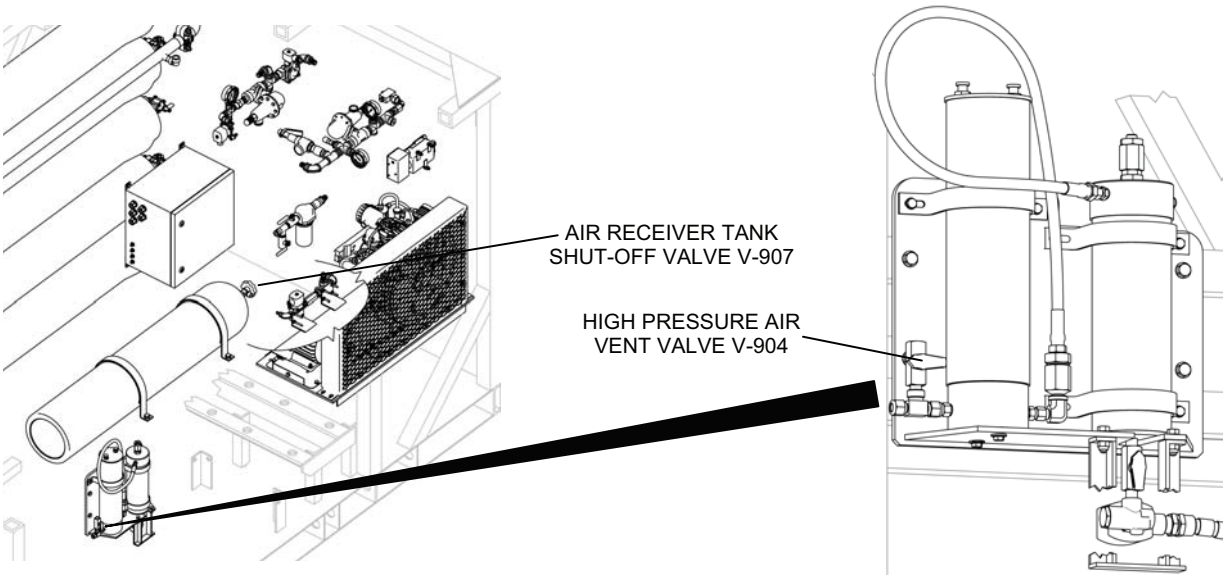

Figure 5. Valves for Bleeding the High Pressure Air System.

Air Compressor Replacement:

Parts (TM 10-4610-309-23P):
Compressor
Materials:
Oil, Compressor (BII) (WP 0038, Table 1, item 33)
Clean, dry, lint-free rags (WP 0038, Table 1, item 39)
Equipment Condition:
TWPS in Standby Shutdown Without Draining Down
Army TWPS: Generator off and TWPS main breaker off
Marine Corps TWPS: TWPS disconnected from power source

Replace the air compressor as follows:

WARNING

The TWPS must be in Shutdown and the TQG and TWPS main breaker must be off (Army) or the TWPS disconnected from its power source (Marine Corps) prior to performing maintenance on the TWPS Air Compressor. Failure to observe this warning can result in injury to personnel and damage to equipment.

High pressure. The air system contains air pressure up to 1800 psig. The high pressure air system must be bled prior to removing the air compressor. Failure to observe this warning can result in injury to personnel and damage to equipment.

Burn hazard. If the compressor has been running, the compressor and other components may be hot. Allow the compressor and its components to cool before handling. Failure to observe this warning can result in burns.

1. Make sure that electrical power to the TWPS has been shut off.
2. Make sure the high pressure air system has been bled down. Refer to **High-Pressure Air System Bleed Down Procedures**.
3. Remove the air compressor as follows (see Figure 6):
   a. Remove the belt guard assembly and drive belt. Refer to **REPLACE** and **Drive Belt**.
   b. Disconnect the compressor third stage temperature switch wiring connector.
   c. Disconnect the Intermediate Separator Automatic Drain Valve V-901 solenoid wiring connector.
   d. Remove the intermediate separator drain line and Drain Valve V-901 by unscrewing the line from the bottom of the separator housing.
   e. Disconnect the air output hose from the compressor outlet fitting.
   f. Remove the four compressor mounting bolts, nuts and washers.

WARNING

Two person lift. Two people are required to safely move the compressor. Lift with your legs, not your back. Failure to observe this warning may result in back injury.

g. Lift and remove the air compressor.

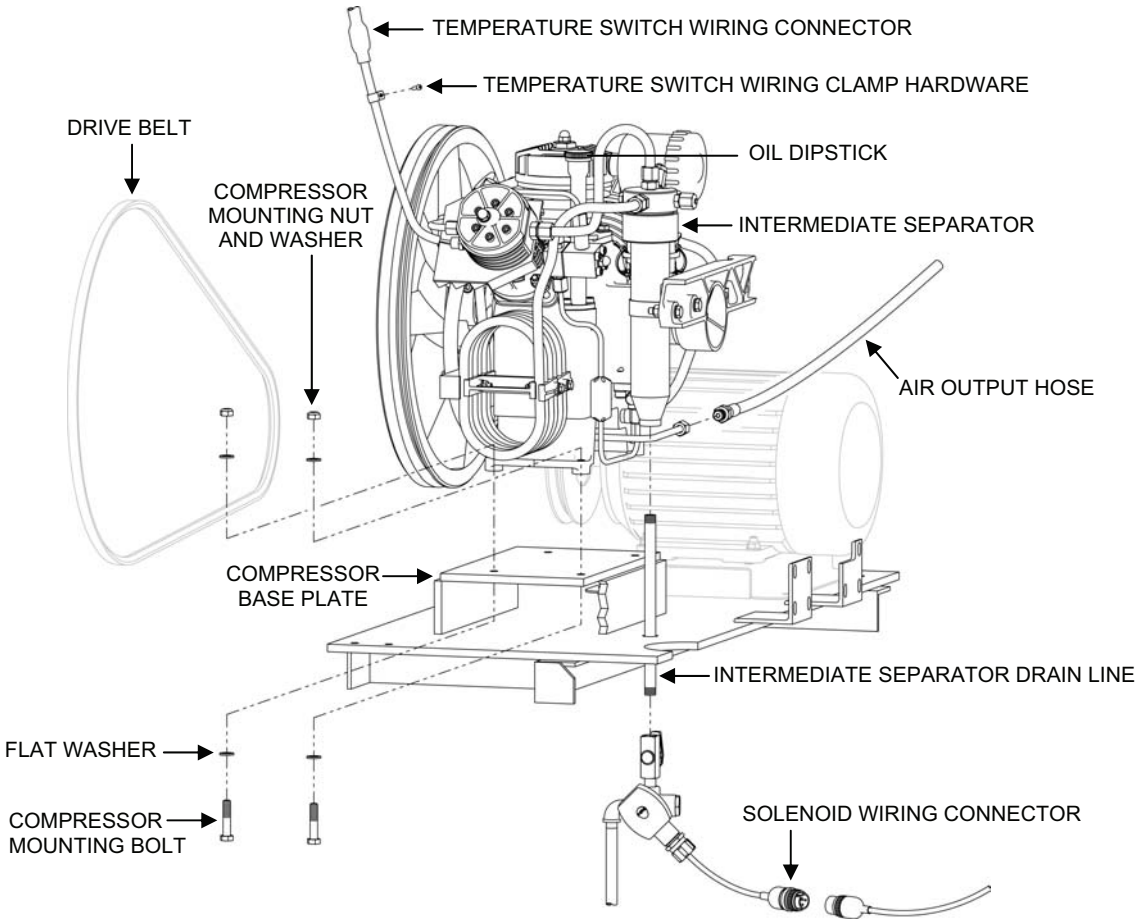

Figure 6. Air Compressor Removal.

4. Before installing the new air compressor, perform the following:
   a. Clean the compressor mounting base plate and inspect it for damage.
   b. Inspect the drive motor for rust corrosion, and loose or missing mounting hardware.
   c. Inspect the motor electrical connections for correct installation, cuts and signs of burnt wiring.

WARNING

Two person lift. Two people are required to safely move the compressor. Lift with your legs, not your back. Failure to observe this warning may result in back injury.

5. Install the new air compressor as follows (see Figure 6):
   a. Lift the compressor up and onto the mounting base and secure it with four bolts, nuts, and washers.
   b. Connect the air hose to the compressor outlet fitting.
   c. Install and adjust the drive belt. Refer to **REPLACE** and **Drive Belt**.
   d. Install the belt guard assembly.
   e. Connect the wiring to the compressor third stage temperature switch.
   f. Install the intermediate separator drain line and valve V-901 to the separator assembly.
   g. Connect the wiring connector for the valve V-901 solenoid.

CAUTION

New compressors are shipped without lubricating oil. Fill the crankcase with oil (approximately 1.5 quarts) before operating the compressor, or equipment damage will result. (See Figure 6 for oil dipstick / fill port location).

6. Start the compressor and check for proper operation.

Oil Pump Replacement:

Parts (TM 10-4610-309-23P):
- Oil pump
- Gasket

Material:
- Oil, compressor (BII) (WP 0038, Table 1, item 33)

Test Equipment
- Pressure gauge, 0-1000 psig (WP 0037, Table 2, item 6)

Equipment Condition:
- TWPS in Standby Shutdown Without Draining Down
- Army TWPS: Generator off and TWPS main breaker off
- Marine Corps TWPS: TWPS disconnected from power source

Replace the air compressor oil pump as follows:

WARNING

The TWPS must be in Shutdown and the TQG and TWPS main breaker must be off (Army) or the TWPS disconnected from its power source (Marine Corps) prior to performing maintenance on the TWPS Air Compressor. Failure to observe this warning can result in injury to personnel and damage to equipment.

High pressure. The air system contains air pressure up to 1800 psig. The high pressure air system must be bled prior to removing the air compressor oil pump. Failure to observe this warning can result in injury to personnel and damage to equipment.

1. Make sure that electrical power to the TWPS has been shut off.
2. Remove the air compressor. Refer to **REPLACE** and **Air Compressor**.

WARNING

Two person lift. Two people are required to safely move the compressor. Failure to observe this warning may result in back injury.

3. Remove the oil pump as follows (see Figure 7):
   a. Tilt the compressor forward to gain access to the oil pump.
   b. Place a suitable container under the compressor to catch any oil that might come out when the pump is removed.
   c. Remove the oil pump supply tubing.
   d. Remove the three socket head cap screws that hold the oil pump in place.
   e. Remove the oil pump and gasket.

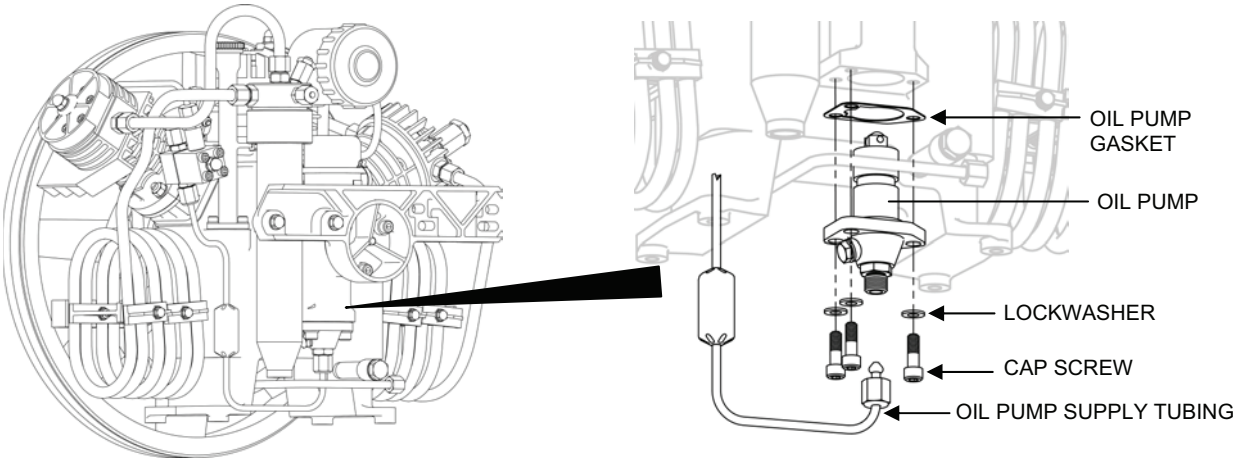

Figure 7. Oil Pump Replacement.

4. Inspect the area of the compressor housing where the oil pump mounts to ensure the entire gasket is removed and the area is clean.
5. Install the oil pump as follows:
    a. Install the new oil pump and gasket to the compressor with the three cap screws.
    b. Install the oil supply tubing.
    c. Install the air compressor. Refer to **REPLACE** and **Air Compressor**.
6. Check the compressor oil level and add oil as necessary.
7. Install the pressure gauge on the oil pressure regulator gauge port (see Figure 4).
8. Start the compressor and check the new oil pump for leaks and proper oil pressure.
9. If no or low oil pressure builds up, vent the oil pump. Refer to **SERVICE** and **Bleed the Lubrication System**.
10. If necessary, adjust the oil pressure regulator. Refer to **REPLACE** and **Oil Pressure Regulating Valve**.

First Stage Valve Head Assembly Replacement:

Parts (TM 10-4610-309-23P):
First Stage Valve Head Assembly
Materials:
Adhesive, silicone (WP 0038, Table 1, item 1)
Equipment Condition:
TWPS in Standby Shutdown Without Draining Down
Army TWPS: Generator off and TWPS main breaker off
Marine Corps TWPS: TWPS disconnected from power source

WARNING

The TWPS must be in Shutdown and the TQG and TWPS main breaker must be off (Army) or the TWPS disconnected from its power source (Marine Corps) prior to performing maintenance on the TWPS Air Compressor. Failure to observe this warning can result in injury to personnel and damage to equipment.

High pressure. The air system contains air pressure up to 1800 psig. The high pressure air system must be bled prior to removing the 1st stage valve head assembly. Failure to observe this warning can result in injury to personnel and damage to equipment.

Replace the first stage valve head assembly as follows:

1. Make sure that electrical power to the TWPS has been shut off.
2. Make sure the high-pressure air system has been bled down. Refer to **High-Pressure Air System Bleed Down Procedures**.
3. Remove the first stage valve head assembly as follows (see Figure 8):
    a. Loosen the clamp that secures the Air Intake Filter AF-1 Assembly to the first stage head and remove the assembly and clamp.
    b. Disconnect the intercooler assembly tube from the compressor first stage head valve assembly.
    c. Disconnect the flexible tube between the compressor first stage valve head assembly and the crankcase demister.

d. Remove the three socket head screws holding the first stage valve head assembly to the first stage piston cylinder.
e. Remove the first stage valve head, O-ring and intake valve plate.
f. Cover the piston cylinder to prevent dirt from entering the cylinder.

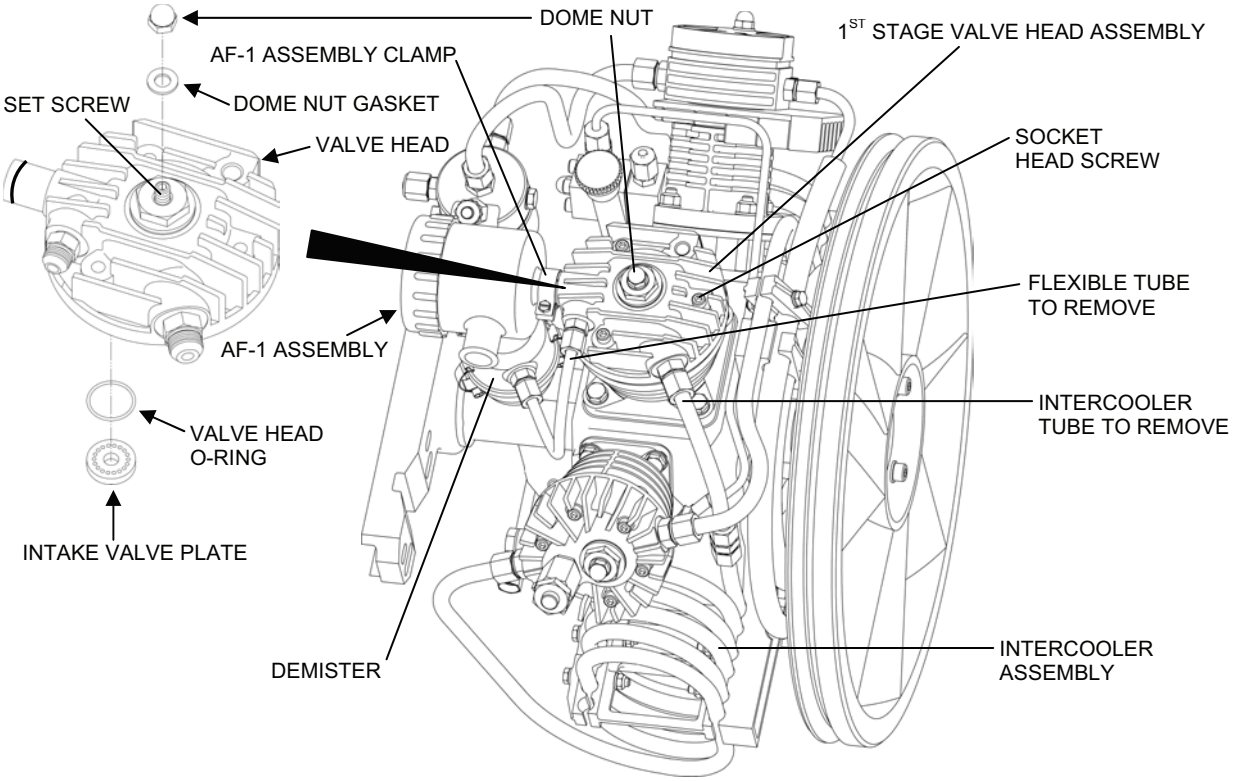

Figure 8. First Stage Valve Head Assembly Replacement.

4. Install the new first stage valve head assembly as follows (see Figure 8):
   a. Place the intake valve plate and valve head O-ring into the valve seat of the piston cylinder.

CAUTION

To avoid damage to the valve body, loosen the pressure valve set screw before installing the valve head.

   b. Remove the dome nut and dome nut gasket from the top of the valve head.
   c. Loosen the first stage pressure valve set screw.
   d. Apply silicone adhesive to the sealing surface of the valve head.
   e. Install the valve head on the cylinder with the 3 socket head cap screws. Torque the screws to 206 in.-lbs.
   f. Tighten the pressure valve set screw until seated.
   g. Install the dome nut gasket and dome nut.

h. Connect the flexible tube from the demister to the new first stage valve head.
i. Connect the intercooler tube to the new first stage valve head.
j. Install and secure the Air Intake Filter AF-1 Assembly to the first stage head with the clamp removed earlier.

5. Turn the compressor manually using the flywheel to make sure that all components have been correctly installed.

CAUTION

After replacing a valve head assembly on the compressor, the compressor should be stopped after 30 minutes of operation and the socket head screws and cap nut at the top of the valve head should be tightened. Failure to observe this CAUTION may result in the valve head gasket(s) leaking.

6. Thirty minutes after restarting the compressor, stop the compressor and let it cool to ambient temperature. Retighten the socket head screws and the cap nut at the top of the valve head.

Second Stage Valve Head Assembly Replacement:

Parts (TM 10-4610-309-23P):
Second Stage Valve Head Assembly
Materials WP0079):
Corrosion preventive compound (WP 0038, Table 1, item 19)
Adhesive, silicone (WP 0038, Table 1, item 1)
Equipment Condition:
TWPS in Standby Shutdown Without Draining Down
Army TWPS: Generator off and TWPS main breaker off
Marine Corps TWPS: TWPS disconnected from power source

WARNING

The TWPS must be in Shutdown and the TQG and TWPS main breaker must be off (Army) or the TWPS disconnected from its power source (Marine Corps) prior to performing maintenance on the TWPS Air Compressor. Failure to observe this warning can result in injury to personnel and damage to equipment.

High pressure. The air system contains air pressure up to 1800 psig. The high pressure air system must be bled prior to removing the 2nd stage valve head assembly. Failure to observe this warning can result in injury to personnel and damage to equipment.

Replace the second stage valve head assembly as follows (see Figure 9).

1. Make sure that electrical power to the TWPS has been shut off.
2. Make sure the high-pressure air system has been bled down. Refer to **High-Pressure Air System Bleed Down Procedures**.
3. Remove the second stage valve head assembly as follows:
   a. Disconnect the two intercooler tubes from the second stage valve head assembly.
   b. Remove the six socket head cap screws that hold the second stage valve head assembly to the cylinder.
   c. Remove the second stage valve head assembly from the piston cylinder.
   d. Cover the piston cylinder to prevent dirt from entering the cylinder.

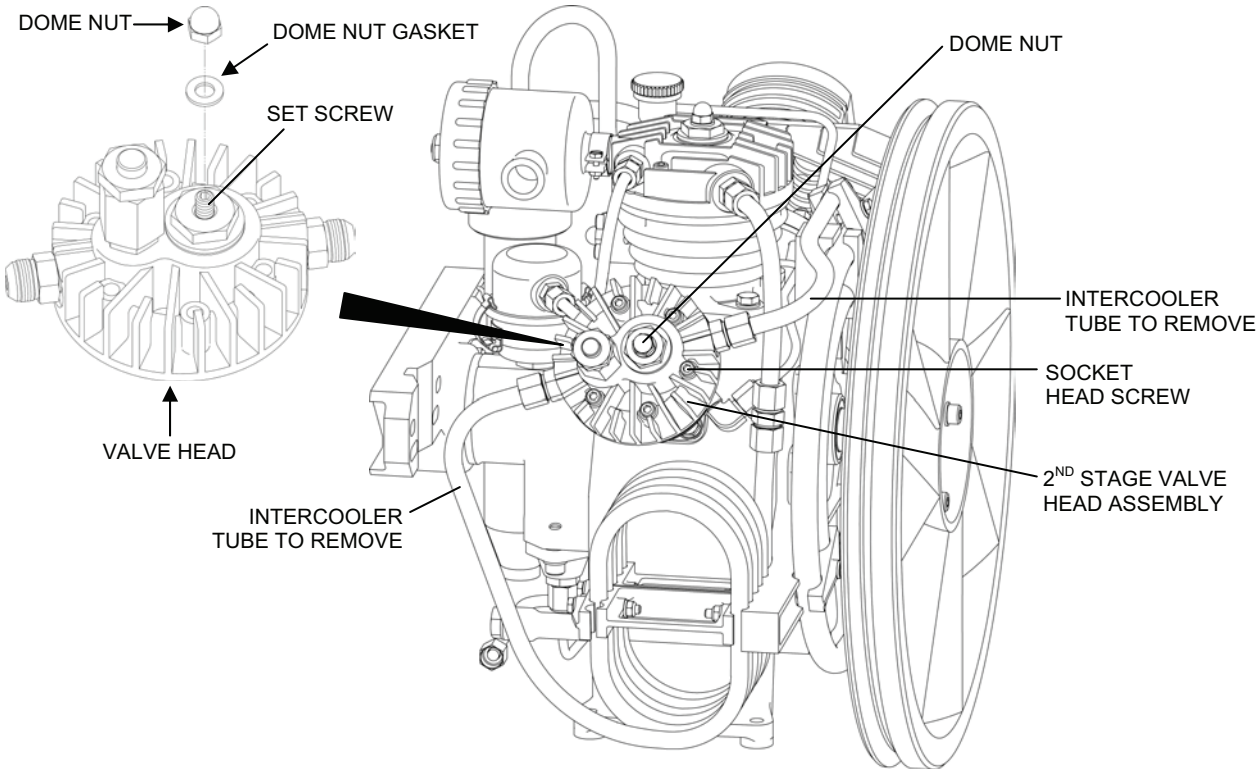

Figure 9. Second Stage Valve Head Assembly Replacement.

4. Install the new second stage valve head assembly as follows (see Figure 9):

CAUTION

To avoid damage to the valve body, loosen the pressure valve set screw before installing the valve head.

a. Remove the dome nut and dome nut gasket from the top of the valve head.
b. Loosen the second stage pressure valve set screw.
c. Apply a thin layer of silicone adhesive to the sealing surface of the valve head.
d. Install the valve head assembly on the piston cylinder.
e. Apply corrosion preventive compound to the six socket head cap screws and secure the valve head and piston cylinder in place. Torque the cap screws to 206 in.-lbs in the sequence shown in Figure 10.

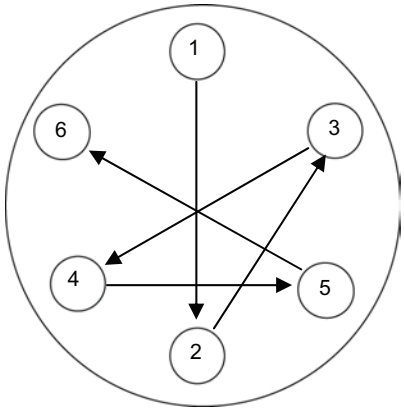

Figure 10. Second Stage Valve Head Cap Screw Torque Sequence.

f. Tighten the pressure valve set screw.
g. Install the dome nut gasket and dome nut.
h. Connect the two intercooler tubes to the new second stage valve head.

5. Turn the compressor manually using the flywheel to make sure that all components have been correctly installed.

CAUTION

After replacing a valve head assembly on the compressor, the compressor should be stopped after 30 minutes of operation and the socket head screws and cap nut at the top of the valve head should be tightened. Failure to observe this CAUTION may result in the valve head gasket(s) leaking.

6. Thirty minutes after restarting the compressor, stop the compressor and let it cool to ambient temperature. Retighten the socket head screws and the cap nut at the top of the valve head.

Third Stage Valve Head Assembly Replacement:

Parts (TM 10-4610-309-23P):
Third Stage Valve Head Assembly
Materials:
Corrosion preventive compound (WP 0038, Table 1, item 19)
Adhesive, silicone (WP 0038, Table 1, item 1)
Equipment Condition:
TWPS in Standby Shutdown Without Draining Down
Army TWPS: Generator off and TWPS main breaker off
Marine Corps TWPS: TWPS disconnected from power source

WARNING

Equipment tag-out procedures are required. The TWPS unit must be properly tagged out prior to performing maintenance. Failure to observe this warning could result in injury to personnel and damage to equipment.

High pressure. The air system contains air pressure up to 1800 psig. The high pressure air system must be bled prior to removing the third stage valve head assembly. Failure to observe this warning can result in injury to personnel and damage to equipment.

Replace the third stage valve head assembly as follows:

1. Make sure that electrical power to the TWPS has been shut off.
2. Make sure the high-pressure air system has been bled down. Refer to **High-Pressure Air System Bleed Down Procedures**.
3. Remove the third stage valve head assembly as follows (see Figure 11):
    a. Remove the tubing between the third stage head assembly and the intermediate filter.
    b. Disconnect the intercooler tube from the third stage valve head assembly.
    c. Remove and discard the dome nut and gasket. Unscrew the setscrew three or four turns.
    d. Remove the six socket head cap screws that secure the valve head to the piston cylinder.
    e. Remove the valve head cover and the valve head together.
    f. Unscrew the temperature switch off the valve head.
    g. Cover the piston cylinder to prevent dirt from entering the cylinder.

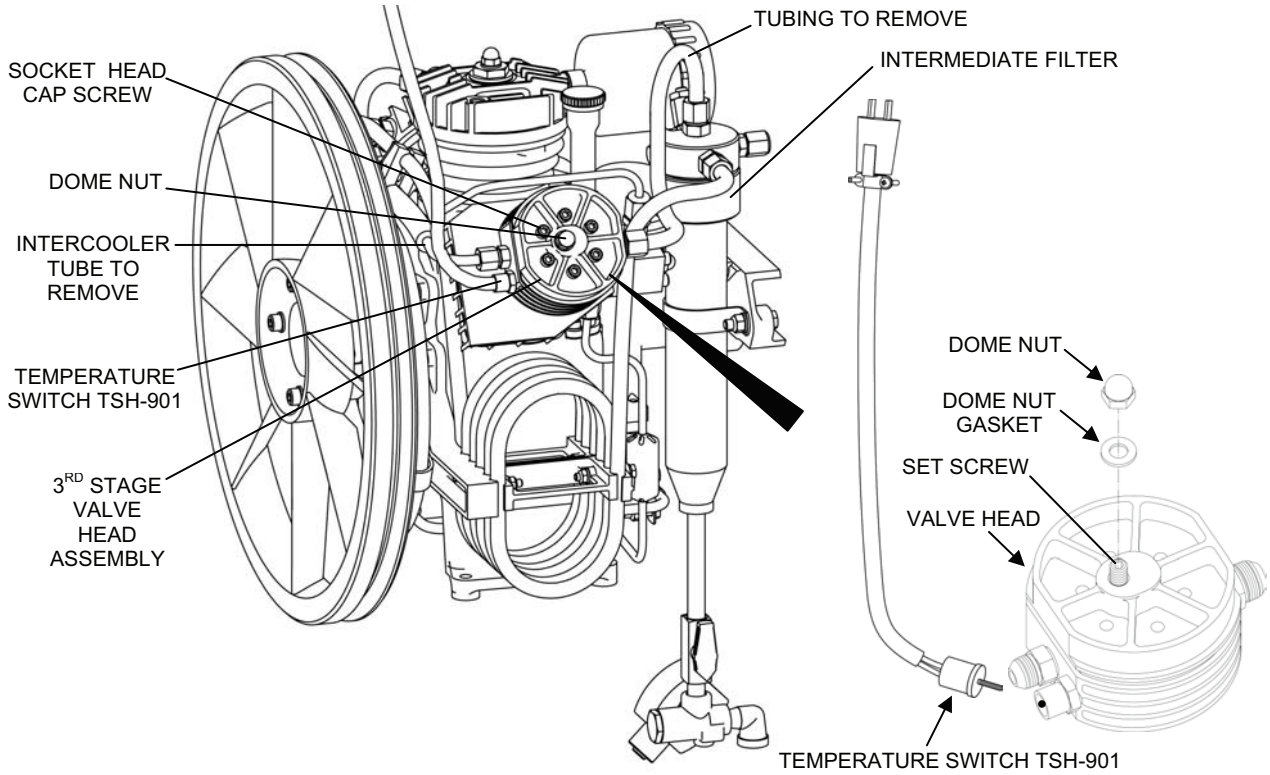

Figure 11. Third Stage Valve Head Assembly Replacement.

NOTE
Do not use a sealing compound on the third stage head.

4. Install the new third stage valve head assembly as follows (see Figure 11):

CAUTION

To avoid damage to the valve body, loosen the pressure valve set screw before installing the valve head.

NOTE
Do not use sealing compound on the third stage valve head.

a. Remove the dome nut and dome nut gasket from the top of the valve head.
b. Loosen the third stage pressure valve set screw.
c. Install the temperature switch finger tight onto the valve head.
d. Position the valve head cover and the valve head on the compressor cylinder.
e. Apply corrosion preventive compound to the six socket head cap screws and secure the valve head and piston cylinder.
f. Insert and torque the cap screws to 206 in.-lbs using the sequence shown in Figure 12.

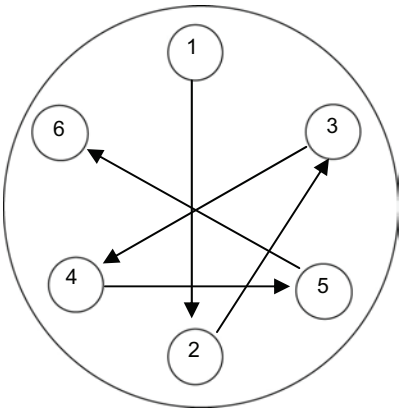

Figure 12. Third Stage Valve Head Cap Screw Torque Sequence.

g. Screw in the pressure valve set screw by hand until seated.
h. Install the dome nut gasket and dome nut.
i. Connect the intercooler tube to the new third stage valve head.
j. Connect the tubing between the third stage valve head and the intermediate filter.

5. Turn the compressor manually using the flywheel to make sure that all components have been correctly installed.

CAUTION

After replacing a valve head assembly on the compressor, the compressor should be stopped after 30 minutes of operation and the socket head screws and cap nut at the top of the valve head should be tightened. Failure to observe this CAUTION may result in the valve head gasket(s) leaking.

6. Thirty minutes after restarting the compressor, stop the compressor and let it cool to ambient temperature. Retighten the socket head screws and the cap nut at the top of the valve head.

Temperature Switch Replacement:

Parts (TM 10-4610-309-23P)
Temperature switch assembly
Equipment Condition:
TWPS in Standby Shutdown Without Draining Down
Army TWPS: Generator off and TWPS main breaker off
Marine Corps TWPS: TWPS disconnected from power source

Replace the temperature switch as follows (see Figure 13):

WARNING

The TWPS must be in Shutdown and the TQG and TWPS main breaker must be off (Army) or the TWPS disconnected from its power source (Marine Corps) prior to performing maintenance on the TWPS Air Compressor. Failure to observe this warning can result in injury to personnel and damage to equipment.

1. Make sure that electrical power to the TWPS has been shut off.
2. Remove the bolt, flat washer, lock washer, and clamp that secure the compressor temperature switch wiring to the back of the belt guard assembly.
3. Disconnect the compressor third stage temperature switch wiring connector.
4. Unscrew the temperature switch from the third stage compressor valve head.
5. Screw a new temperature switch assembly into the thirds stage compressor valve head.
6. Reconnect the compressor third stage temperature switch wiring connector.
7. Secure the temperature switch wiring to the back of the belt guard assembly using the bolt, flat washer, lock washer, and clamp that were removed earlier.

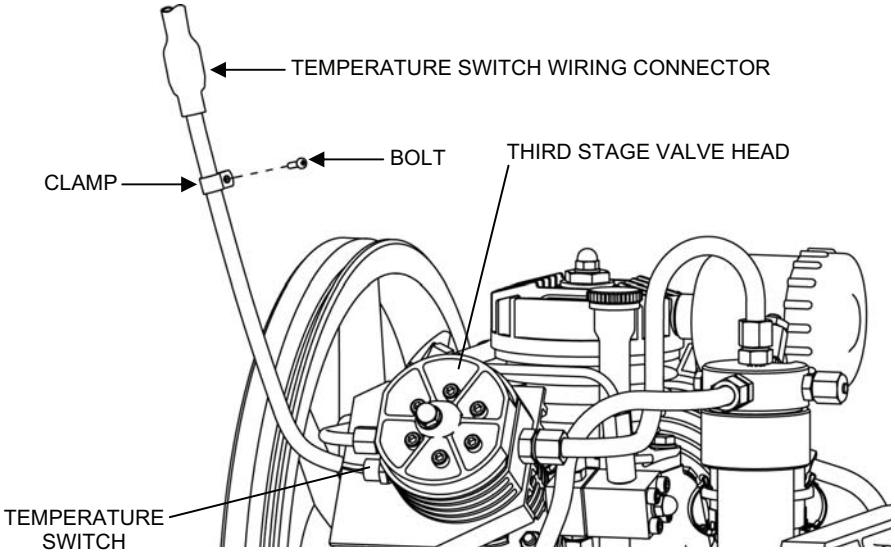

Figure 13. Temperature Switch Assembly Replacement.

Compressor Drive Belt Replacement:

Parts (TM 10-4610-309-23P):
Belt, V
Equipment Condition:
TWPS in Standby Shutdown Without Draining Down
Army TWPS: Generator off and TWPS main breaker off
Marine Corps TWPS: TWPS disconnected from power source

WARNING

The TWPS must be in Shutdown and the TQG and TWPS main breaker must be off (Army) or the TWPS disconnected from its power source (Marine Corps) prior to performing maintenance on the TWPS Air Compressor. Failure to observe this warning can result in injury to personnel and damage to equipment.

Replace the air compressor drive belt as follows:

1. Make sure that electrical power to the TWPS has been shut off.
2. Remove the air compressor assembly drive belt as follows (see Figure 14):
   i. Remove the 15 cap screws, 15 lock washers, and 15 flat washers from the front of the belt guard assembly and lift the front screen off the belt guard assembly.
   j. Loosen the four drive motor mounting nuts.
   k. Loosen the belt adjustment bolt (turn it counterclockwise) and slide the drive motor toward the compressor to loosen and remove the belt.

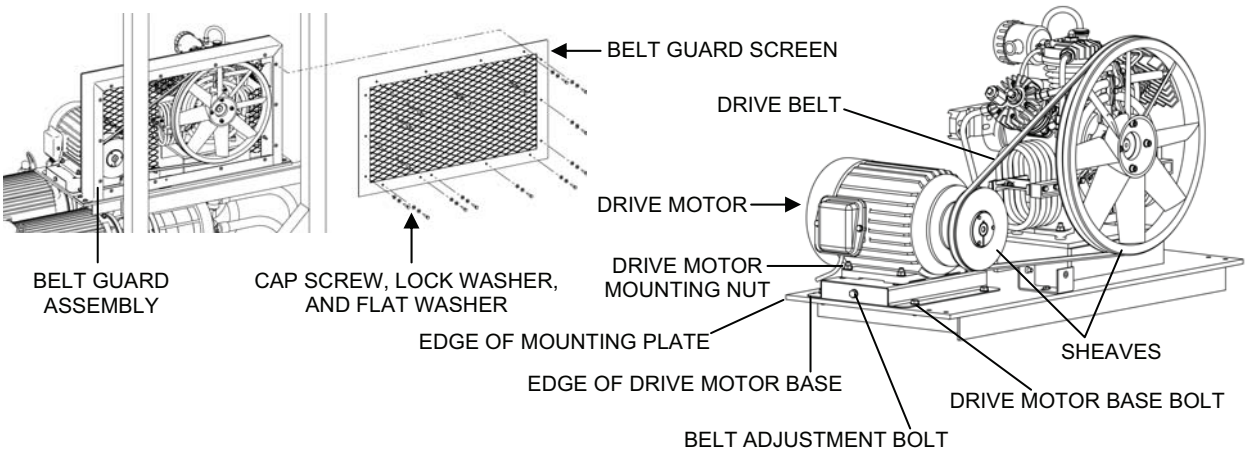

Figure 14. Drive Belt Replacement.

3. Check that the air compressor and drive motor sheaves are secure.
4. Remove any debris from the front area of the motor and compressor.

5. Check the compressor and motor sheave alignment and adjust if necessary as follows (see Figure 14):
    a. Loosen the drive motor base bolts.
    b. Measure from the edge of the mounting plate to the edge of the drive motor base at both ends of the same side.
    c. Set the drive motor base for 2 inches on both side of the base. Then tighten the bolts slightly.
    d. Sight along the compressor sheave to the motor sheave and move the motor base slightly as needed to bring the motor sheave in line with the compressor sheave.
    e. Measure the distance to the edge of the mounting plate again at both ends. Adjust the motor base slightly as needed to make the distance equal on both ends.
    f. Repeat steps d and e as needed to ensure alignment.
    g. Tighten the drive motor base bolts.
6. Install the new drive belt as follows:
    a. Install the belt onto the compressor and motor sheaves.
    b. Turn the belt adjustment bolt clockwise until the belt has about ¼ -in. deflection when pushing down hard in the center of the belt with your thumb.
    c. Tighten the drive motor mounting nuts.
    d. Install the belt guard screen using the 15 cap screws, 15 lock washers, and 15 flat washers.
    e. Start the compressor and check for proper operation.
7. Check the belt tension after 50 hours of operation and readjust if necessary.

SERVICE

Compressor Belt Tension Adjustment:

Equipment Condition:
TWPS in Standby Shutdown Without Draining Down
Army TWPS: Generator off and TWPS main breaker off
Marine Corps TWPS: TWPS disconnected from power source

WARNING

The TWPS must be in Shutdown and the TQG and TWPS main breaker must be off (Army) or the TWPS disconnected from its power source (Marine Corps) prior to performing maintenance on the TWPS Air Compressor. Failure to observe this warning can result in injury to personnel and damage to equipment.

If the compressor belt has rolled over (turned inside out, usually because of insufficient tightness), replace the belt. Do not reuse or continue to use the belt. Failure to observe this warning can result in the belt breaking during operation causing equipment damage and possible injury.

Sight along the compressor sheave to the motor sheave to determine if they are in line with each other. If they are not, adjust the compressor and motor sheave alignment as follows (see Figure 15):

1. Make sure that electrical power to the TWPS has been shut off.
2. Loosen the four drive-motor mounting nuts.
3. Turn the belt adjustment bolt counterclockwise to loosen the belt.
4. Loosen the drive motor base bolts.
5. Measure from the edge of the mounting plate to the edge of the drive motor base at both ends of the same side.
6. Set the drive motor base for 2 inches on both side of the base. Then tighten the bolts slightly.
7. Sight along the compressor sheave to the motor sheave and move the motor base slightly as needed to bring the motor sheave in line with the compressor sheave.
8. Measure the distance to the edge of the mounting plate again at both ends. Adjust the motor base slightly as needed to make the distance equal on both ends.
9. Repeat steps d and e as needed to ensure alignment.
10. Tighten the drive motor base bolts.

Adjust the air compressor drive belt tension as follows (see Figure 15):

1. Make sure that electrical power to the TWPS has been shut off.
2. Loosen the four drive-motor mounting nuts if not already loosened to adjust sheave alignment.
3. Reach in behind the belt guard assembly and push down hard in the center of the belt with your thumb to check the belt tension. The belt should deflect about ¼ -in.
4. Turn the belt adjustment bolt clockwise to tighten the belt or counterclockwise to loosen the belt until the belt has about ¼ -in. deflection when pushed down with your thumb.
5. Tighten the four drive-motor mounting nuts.
6. Check that the air compressor and drive motor sheaves are secure.
7. Remove any debris from the front area of the motor and compressor.
8. Start the compressor and check for proper operation.

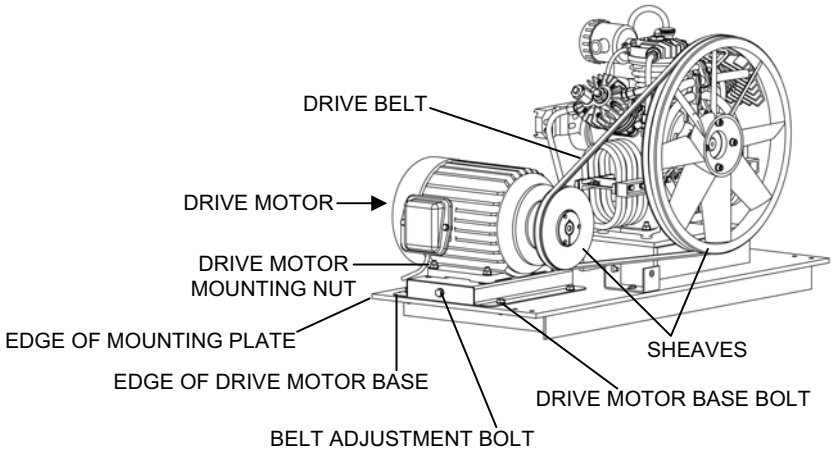

Figure 15. Compressor Belt Tension Adjustment.

Intermediate Filter Service:

Parts (TM 10-4610-309-23P):
Filter element
Equipment Condition:
TWPS in Standby Shutdown Without Draining Down
Army TWPS: Generator off and TWPS main breaker off
Marine Corps TWPS: TWPS disconnected from power source

Clean or replace the intermediate filter as follows (see Figure 16):

WARNING

The TWPS must be in Shutdown and the TQG and TWPS main breaker must be off (Army) or the TWPS disconnected from its power source (Marine Corps) prior to performing maintenance on the TWPS Air Compressor. Failure to observe this warning can result in injury to personnel and damage to equipment.

High pressure. The air system contains air pressure up to 1800 psig. The high pressure air system must be bled prior to removing the intermediate filter. Failure to observe this warning can result in injury to personnel and damage to equipment.

1. Make sure that electrical power to the TWPS has been shut off.
2. Make sure the high-pressure air system has been bled down. Refer to **High-Pressure Air System Bleed Down Procedures**.
3. Disconnect the tubing from the fittings on the filter head.
4. Unscrew the knurled nut and remove the filter head assembly.
5. Remove the center screw, filter, baffle cone, and distribution plate.
6. Inspect the filter and clean or replace as necessary. To clean the filter, wash it in hot, soapy water and blow it dry with compressed air.
7. Install the center screw, filter, baffle cone, and distribution plate on the filter head.
8. Install the filter head assembly and tighten the knurled nut.
9. Connect the tubing to the fittings on the filter head.
10. Operate the air compressor and check for leaks.

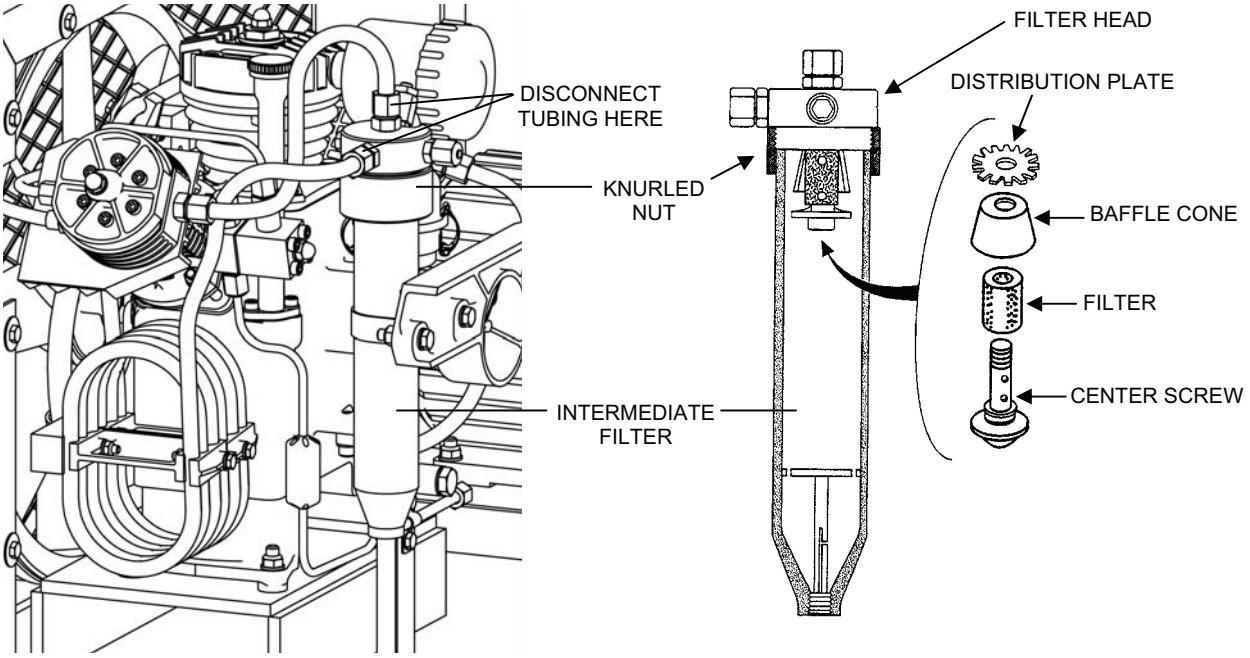

Figure 16. Intermediate Filter.

Compressor Oil Change:

Material:
- Compressor Oil, Bauer Oil-0024, 1-½ quarts (synthetic oil recommended) (WP 0038, Table 1, item 33)
- Clean rags (WP 0038, Table 1, item 39)
- Drip pan

Equipment Condition:
- TWPS in Standby Shutdown Without Draining Down
- Army TWPS: Generator off and TWPS main breaker off
- Marine Corps TWPS: TWPS disconnected from power source

Change the compressor oil as follows (see Figure 17):

WARNING

The TWPS must be in Shutdown and the TQG and TWPS main breaker must be off (Army) or the TWPS disconnected from its power source (Marine Corps) prior to performing maintenance on the TWPS Air Compressor. Failure to observe this warning can result in injury to personnel and damage to equipment.

High pressure. The air system contains air pressure up to 1800 psig. The high pressure air system must be bled prior to changing the compressor oil. Failure to observe this warning can result in injury to personnel and damage to equipment.

1. Change the compressor oil right after the compressor has been running to ensure that the compressor oil is warm.
2. Make sure that electrical power to the TWPS has been shut off.
3. Make sure the high-pressure air system has been bled down. Refer to **High-Pressure Air System Bleed Down Procedures**.
4. Place a suitable container under the compressor oil drain plug to catch the oil.
5. Remove the oil cap/dipstick from the oil filler neck.
6. Remove the oil drain plug and allow the oil to drain into the container.
7. After the oil has completely drained, reinstall the drain plug.
8. Slowly pour about 1-½ quarts of new oil into the oil filler neck until the level reaches the maximum notch on the dipstick.
9. Wait a few minutes after adding the oil, then check and adjust the oil level if necessary before putting the compressor into operation.
10. Reinstall the oil cap/dipstick.
11. Start the compressor and check the oil sight glass for bubbles. If bubbles are visible, vent the oil pump. Refer to **SERVICE** and **Bleed the Lubrication System**.
12. Properly dispose of the old oil.

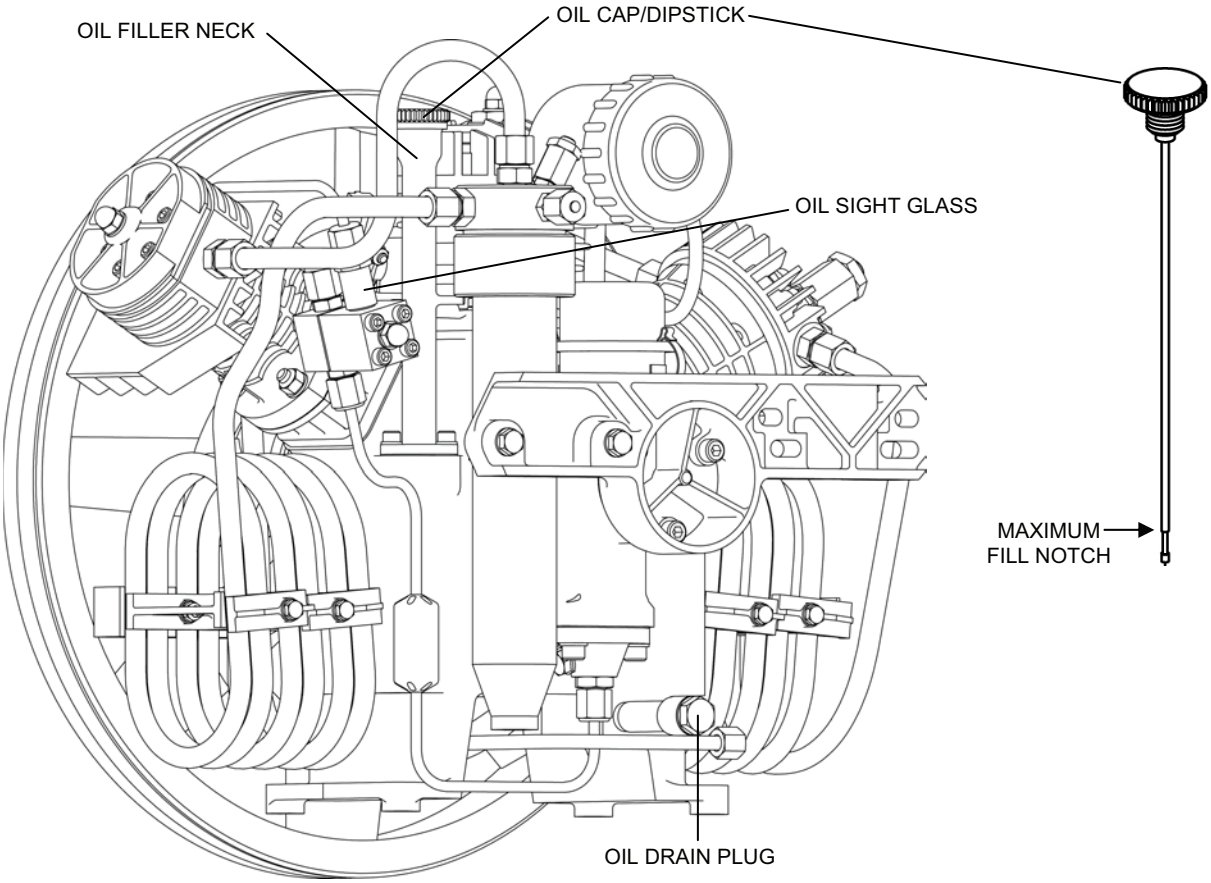

Figure 17. Compressor Oil Change.

Bleed the Lubrication System (Vent the Oil Pump):

Material:
Clean rags (WP 0038, Table 1, item 39)
Equipment Condition:
TWPS in Standby Shutdown without Drain-Down

Bleed the air compressor lubrication system (vent the oil pump) as follows:

1. Make sure TWPS is in Standby Shutdown without Draining Down (WP 0013, TM 10-4610-309-10).
2. Bleed the air from the high pressure air system as follows:
   a. Switch the Air Compressor control at the OCP to OFF.
   b. **Slowly** open High Pressure Air Vent Valve V-904 to bleed the air from the high-pressure system. Then close the valve (see Figure 18 for valve location).

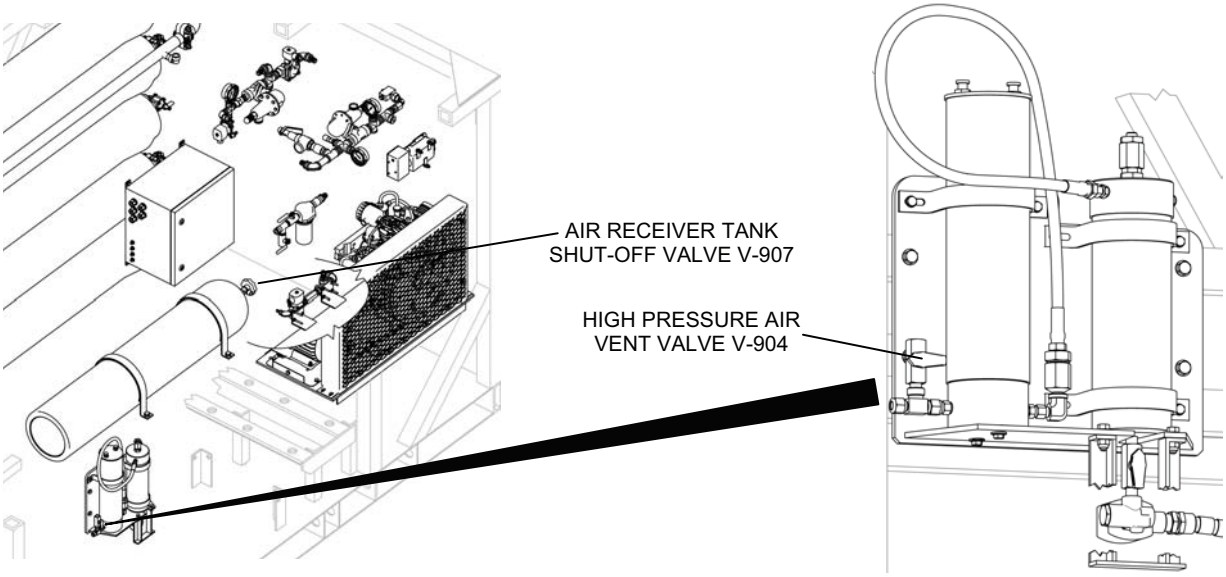

Figure 18. Valve for Bleeding the High Pressure Air System.

WARNING

High pressure. The air system contains air pressure up to 1800 psig. The air system must be bled prior to bleeding the air compressor lubrication system. Failure to observe this warning can result in injury to personnel and damage to equipment.

Moving parts. The compressor must not be allowed to operate during this procedure. Make sure the Air Compressor control at the OCP is switched to OFF before disconnecting tubing from the compressor oil pump and turning the compressor flywheel. Failure to observe this warning may result in serious injury.

3. Bleed the air compressor lubrication system (vent the oil pump) as follows (see Figure 19):
    a. Remove the 15 cap screws, 15 lock washers, and 15 flat washers from the front of the belt guard assembly and lift the front screen off the belt guard assembly to provide access to the flywheel.
    b. Place a rag under the compressor oil pump.
    c. Unscrew the tube nut and disconnect the oil pump supply tubing from the bottom of the oil pump.
    d. Turn the compressor flywheel counterclockwise by hand until bubble-free oil comes from the fitting. This should only take a few turns of the flywheel.
    e. Reconnect the supply tubing to the oil pump.
    f. Reinstall the belt guard screen.

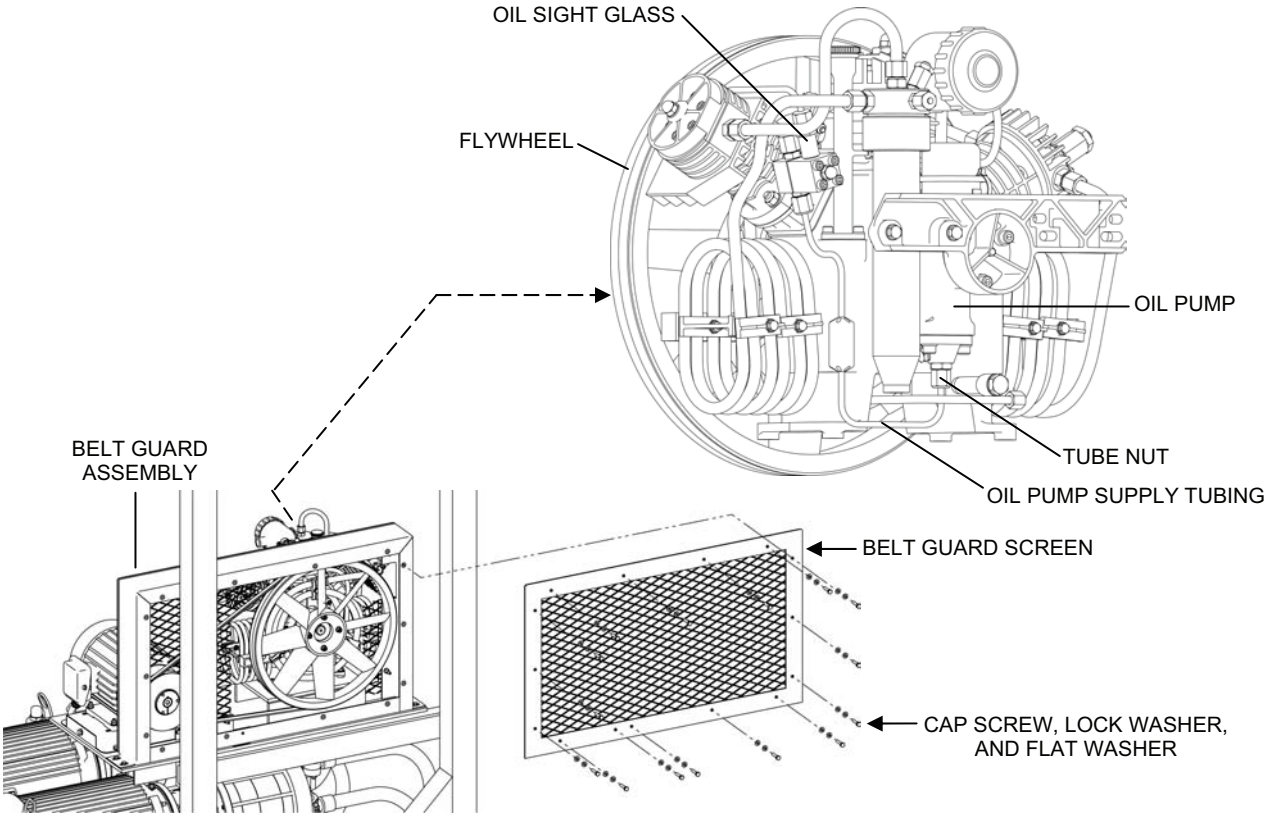

Figure 19. Air Compressor Oil Pump Supply Tubing and Flywheel.

4. Make sure Air Receiver Tank Shut-Off Valve V-907 is open.
5. Switch the Air Compressor control at the Operator Control Panel (OCP) to AUTO.
6. While the compressor is operating, check the oil sight glass for oil flow and that there are no air bubbles visible.

END OF WORK PACKAGE

TACTICAL WATER PURIFICATION SYSTEM (TWPS) FIELD MAINTENANCE PROCEDURES CHEMICAL INJECTION SYSTEM

0018 00

THIS SECTION COVERS:
Replace, Repair

INITIAL SETUP

Maintenance Level
Field
Tools
Army: General Mechanic's Tool Kit (WP 0037)
Marine Corps: Common No. 1 Tool Set (WP 0037)
Materials/Parts:
Refer to TM 10-4610-309-23P for repair parts information
Personnel Required
One
Equipment Condition
TWPS in Standby Shutdown with power "ON" initially and "OFF" when specified

GENERAL

This procedure contains information and instructions for testing, replacing, and repairing components in the Chemical Injection System of the TWPS. The procedures covered in this work package include:

- Chemical Injection Pump Replacement (CP1, CP2, and CP3)
- Injection Check Valve Assembly Replacement (V-613, V-623 and V-633)
- Foot Valve Assembly Replacement (V-611, V-621, and V-631)
- Chemical Injection Pump Repair / Four-Function Valve (V-612, V-622 and V-632)
- Chemical Injection Pump Repair / Pump Head
- Chemical Injection Pump Repair / Pump Diaphragm
- Chemical Injection Pump Repair / Discharge Cartridge Valve, O-Ring, and Flat Washer
- Chemical Injection Pump Repair / Suction Valve Assembly

REPLACE

Chemical Injection Pump Replacement (CP1, CP2, and CP3):

Parts (TM 10-4610-309-23P):
    Chemical injection pump
    Electrical tie-down straps
Material:
    Five-gallon bucket
Equipment Condition:
    TWPS in Standby Shutdown with power "ON" initially and "OFF" when specified

Replace any one or all three of the TWPS chemical injection pumps as follows (see Figure 1):

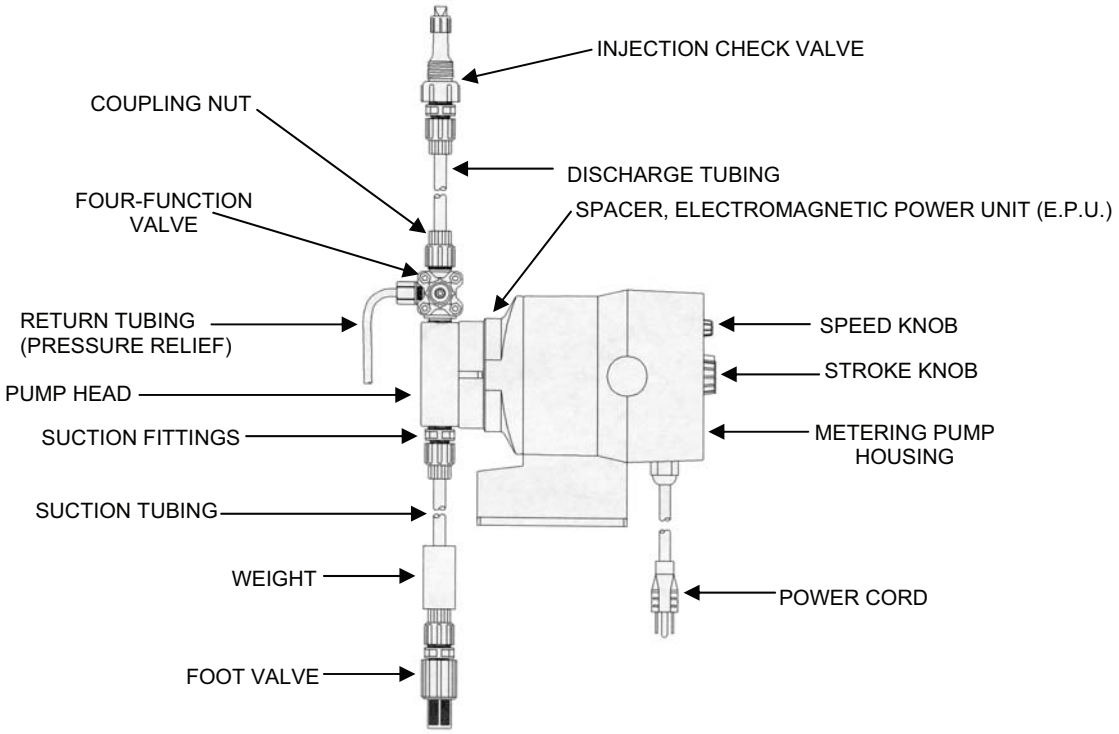

Figure 1. Chemical Injection Pump.

1. Depressurize the chemical injection pump discharge tubing as follows:

WARNING

Hazardous liquid chemical or fumes. Wear a protective face shield and chemical gloves when handling liquid sodium bisulfite, antiscalant, or calcium hypochlorite solutions. Avoid inhaling chemical fumes. Failure to observe this warning may result in gastrointestinal irritation, nausea, diarrhea, irritation of the nose, throat, mucous membranes, eyes, and skin. Ingestion of calcium hypochlorite can be fatal. Calcium hypochlorite can cause blindness if it comes in contact with the eyes.

a. Turn the relief knob (black knob) ¼ turn either direction and pull out the anti-siphon knob (yellow knob) and hold it out for 5-10 seconds (see Figure 2).
b. The discharge tubing is now depressurized.

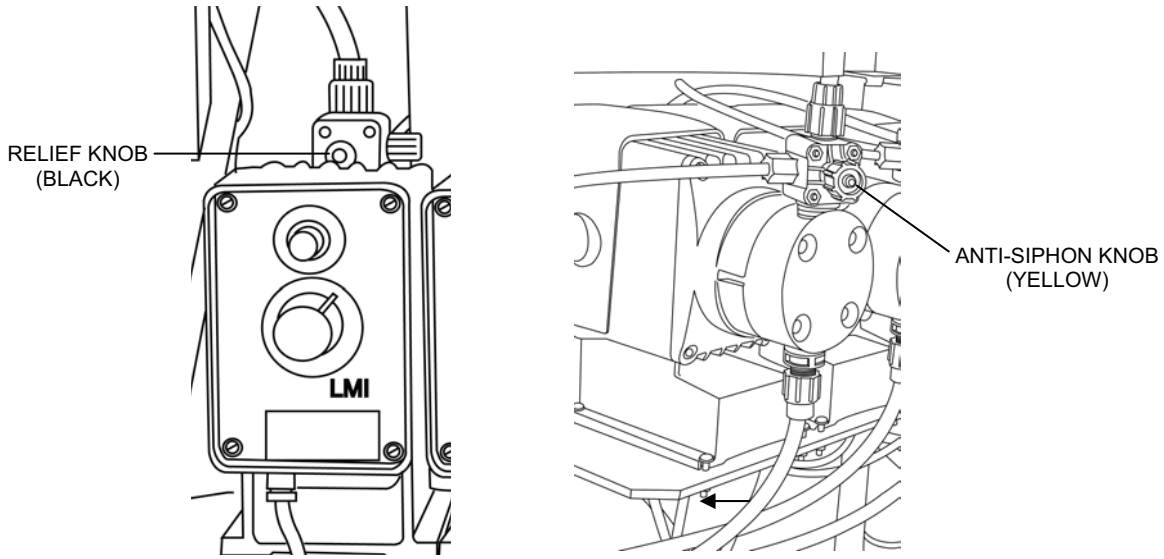

Figure 2. Chemical Pump Relief and Anti-Siphon Knobs.

2. Drain the Chemical Injection Pump as follows:
   a. Disconnect the discharge tubing.
   b. Place the foot valve into a five-gallon bucket of water or other neutralizing solution.
   c. Switch the pump to “ON” at the operator control panel (OCP) to flush the pump head assembly.
   d. Once the pump head assembly has been flushed, lift the foot valve out of the solution. Continue to pump air into the pump head until the pump head is purged of water or neutralizing solution.
   e. Turn the pump switch on the OCP back to “AUTO”.
   f. Turn the relief knob (black) and the anti-siphon knob (yellow) on the four-function valve 1/4 turn to the normal position (see Figure 2).
3. Remove the Chemical Injection Pump from the TWPS as follows (see Figure 3):
   a. Turn the speed knob fully counter-clockwise until it clicks. This is the off position.

WARNING

Electrical hazard. The TWPS unit must be properly de-energized before opening the terminal box for the chemical injection pumps. Failure to observe this warning may result in injury or death from electrocution.

   b. Place the TWPS in Standby Shutdown without Draining Down, including switching the Main Circuit Breaker on the power distribution panel (PDP) to OFF (WP 0013, TM 10-4610-309-10).
   c. Loosen the four screws on the chemical pump terminal box cover and remove the cover.

NOTE

Each chemical pump power cable has a dedicated circuit that is controlled by the PLC (Programmable Logic Controller) in the PDP. Each pump power cable must be wired to it's specific circuit in order for the pump to operate as controlled by the PLC. Do not mix the wiring.

d. Trace the power cable from the pump to be replaced to the terminal box.
e. Tag and disconnect the three wires for the chemical pump to be replaced from the other wires in the terminal box.
f. Unscrew the lock nut from the terminal box and pull out the cable strain relief and cable.

CAUTION

Do NOT use a pliers or pipe wrench on coupling nuts or fittings. Failure to observe this caution could result in stripping the threads on the nuts or fittings.

g. Tag and disconnect the discharge tubing from the four-function valve.
h. Tag and disconnect the suction tubing from the pump.
i. Tag and disconnect the return tubing from the four-function valve.
j. Remove the four bolts, nuts, and washers that secure the chemical injection pump to the TWPS and slide the pump out from its mounting.

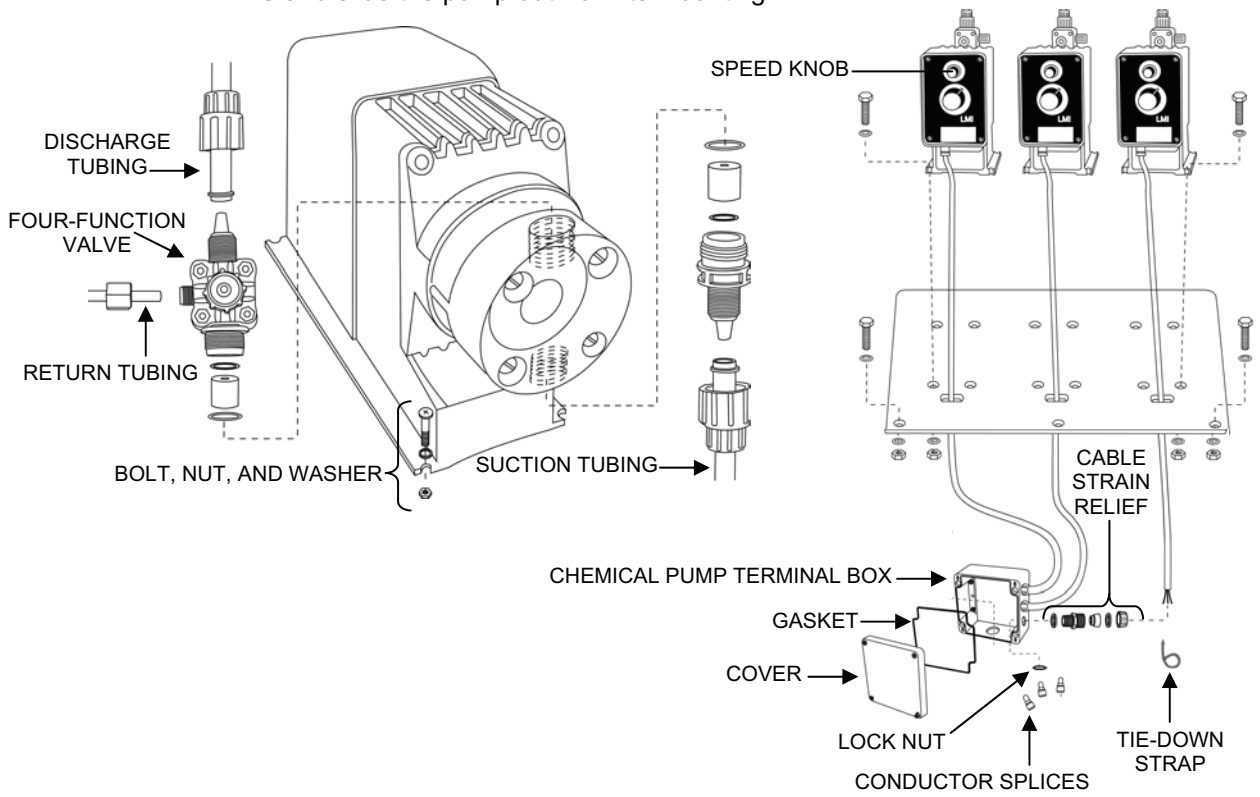

Figure 3. Chemical Pump Replacement.

4. Install the new chemical injection pump onto the TWPS as follows (see Figure 3):

NOTE

All new Chemical Injection Pumps are pre-primed with water when shipped from the factory. Before priming the pump, drain the water from the pump and refill the pump head with the solution to be pumped. This will aid in priming.

   a. Slide the new Chemical Injection Pump onto its mounting on the TWPS and secure it with the four bolts, nuts and washers.

CAUTION

All fittings should be hand-tightened. It may be necessary to turn the fitting an additional 1/ 8 – 1/4 turn after the fitting contacts the seal ring to provide a leak-proof seal. Excessive over-tightening or using a pipe wrench can cause damage to the fittings, seals, or pump head.

   b. Connect the return tubing to the four-function valve.
   c. Connect the suction tubing to the suction side of the pump.
   d. Connect the discharge tubing to the discharge side of the four-function valve.

WARNING

Electrical hazard. The TWPS unit must be properly de-energized before opening the terminal box for the chemical injection pumps. Failure to observe this warning may result in injury or death from electrocution.

NOTE

Each chemical pump power cable has a dedicated circuit that is controlled by the PLC (Programmable Logic Controller) in the PDP. Each pump power cable must be wired to it's specific circuit in order for the pump to operate as controlled by the PLC. Do not mix the wiring.

   e. Cut the plug off the end of the new pump power cable and strip about 1-in of insulation off each of the 3 wires.
   f. Slide the cable strain relief and washer over the power cable wires for the new pump.
   g. Slide the power cable wires through the terminal box opening and fit the strain relief into the opening.
   h. Slide the lock nut over the wires, thread it onto the strain relief, and tighten.
   i. Connect the chemical pump wires to the wires inside the terminal box as tagged using conductor splices.
   j. Secure the wires together using an electrical tie-down strap.
   k. Make sure the terminal box cover gasket is in place in the cover.
   l. Secure the cover to the box using the four screws.
5. Start up the TWPS from Stand-by Shutdown (WP 0013, TM 10-4610-309-10).

6. Start-up/prime the new Chemical Injection Pump as follows (see Figure 4):

CAUTION

The speed knob turns the injection pump on and must be set first. Do not attempt to adjust the stroke knob until the speed knob is set. Damage to the injection pump will result if the speed knob is not set first.

a. Turn the speed knob clockwise to turn the pump on.
b. Set the speed knob at 80%.
c. Then set the stroke knob at 100%.

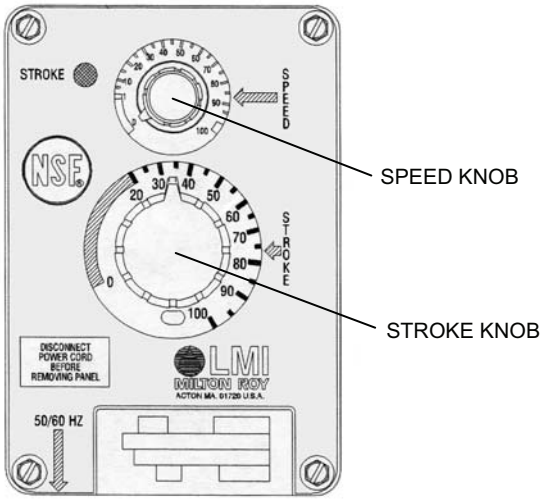

Figure 4. Chemical Injection Pump Control Knobs.

d. Turn the relief knob (black knob) of the four-function valve 1/4 turn (see Figure 2).
e. The suction tubing should begin to fill with solution from the chemical solution bucket.
f. A small amount of solution will begin to discharge out the return tubing of the four-function valve. Once this happens, turn the relief knob another ¼ turn (black knob – see Figure 2)
g. The pump is now primed.

Injection Check Valve Assembly Replacement (V-613, V-623, V-633):

Parts (TM 10-4610-309-23P):
Injection check valve assembly
Material:
Antiseizing tape (WP 0038, Table 1, item 49, 50)
Five gallon bucket
Equipment Condition:
TWPS in Standby Shutdown Without Draining Down with power “ON”

Replace an injection check valve assembly as follows (see Figure 5 for the location of the three injection check valves):

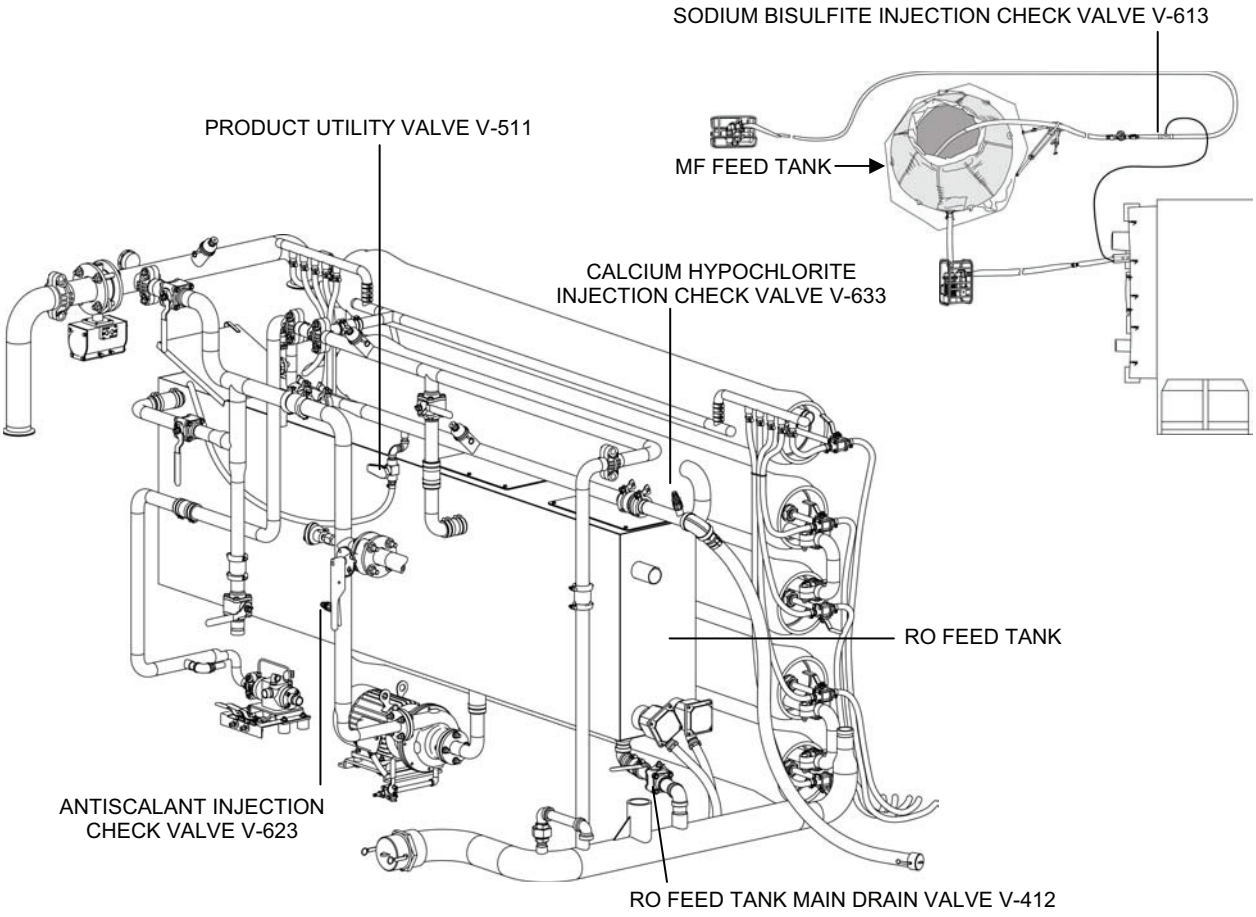

Figure 5. Injection Check Valve Locations.

CAUTION

Be sure the return tubing is connected to the four-function valve and runs back to the chemical solution bucket.

The RO tank must be drained prior to removing Injection Check Valve V-623. Failure to observe this caution could result in filtrate spilling out of the RO tank onto the unit and working area.

1. Depressurize the chemical injection pump discharge tubing as described in the **Chemical Injection Pump Replacement** procedure earlier in this WP.
2. When replacing Antiscalant Injection Check Valve V-623, open RO Feed Tank Main Drain Valve V-412 and drain the RO tank (see Figure 5 for valve V-412 location).
3. When replacing Calcium Hypochlorite Injection Check Valve V-633, open Product Utility Valve V-511 and drain the product line (see Figure 5 for valve V-511 location).
4. Remove the old injection check valve assembly as follows (see Figure 6):
    a. Unscrew the coupling nut from the injection check valve housing and disconnect the discharge tubing from the injection check valve housing.
    b. Remove and discard the clamp ring and coupling nut from the discharge tubing.
    c. Place a bucket or suitable container under the injection check valve assembly.
    d. Unscrew the injection check valve body from the process pipe.
    e. Discard the injection check valve assembly including the coupling nut, clamp ring, valve housing, flat washer injection seat, check valve ball, spring, O-ring, injection check valve body and flapper valve.

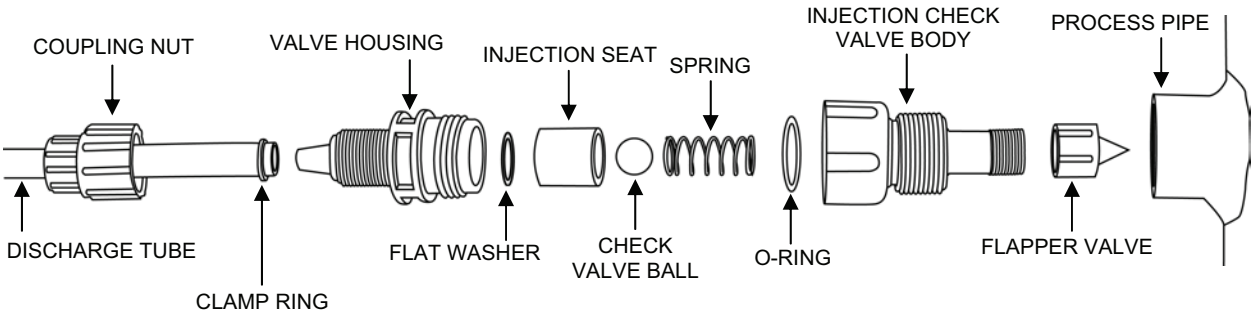

Figure 6. Injection Check Valve Assembly Replacement.

CAUTION

Do not use pliers or pipe wrench on coupling nuts or fittings.

5. Install the new injection check valve assembly as follows (see Figure 6):
    a. Apply antiseize tape only to the pipe threads of the injection check valve body that threads into the process pipe.
    b. Thread the new injection check valve assembly into the process pipe.

c. Make sure the discharge tubing is cut square.
d. Slide the new coupling nut over the discharge tubing so that the nut threads are facing toward the end of the tubing.
e. Install the clamp ring about 1/4 –inch onto the end of the tubing.
f. Insert the end of the discharge tube over the cone-shaped end of the valve housing.
g. Thread the coupling nut onto the valve housing and tighten hand-tight.

6. Start up the TWPS from Standby Shutdown and prime the pump as described in the **Chemical Injection Pump Replacement** procedure earlier in this WP.
7. Observe the injection check valve to determine that it does not leak.

Foot Valve Assembly Replacement (V-611, V-621 and V-631):

Parts:
Foot valve assembly (TM 10-4610-309-23P)
Material:
Five-gallon bucket
Equipment Condition:
TWPS electric power "ON"

Replace a chemical injection pump foot valve assembly as follows:

1. Depressurize the chemical injection pump discharge tubing as described in the **Chemical Injection Pump Replacement** procedure earlier in this WP.
1. Remove the foot valve and suction tubing from the chemical solution bucket and place it in the empty five-gallon bucket to drain the suction line.
2. Remove the foot valve assembly from the suction tube as follows:
   a. Unscrew the coupling nut from the foot valve housing and remove the foot valve assembly from the suction tubing.
   b. Remove the clamp ring and coupling nut from the suction tubing.
   c. Discard the clamp ring, coupling nut, foot valve housing, flat washer, cartridge valve, O-ring, foot valve seat, and foot valve screen.

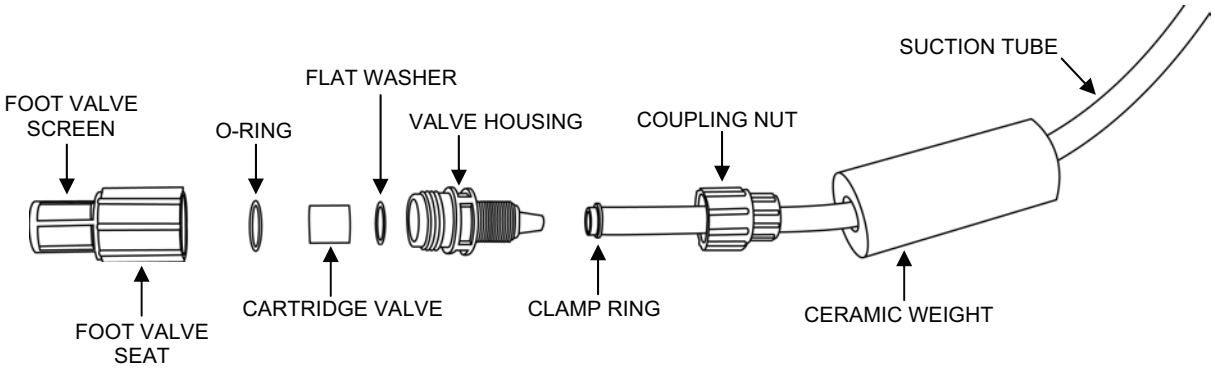

Figure 7. Foot Valve Assembly Replacement.

3. Install the new foot valve assembly as follows (see Figure 7):
    a. Make sure that the ceramic weight is inserted over the suction tubing.
    b. Slide the new coupling nut onto the suction tubing so that the nut threads are facing toward the end of the tubing.
    c. Install the clamp ring about 1/4 –inch onto the end of the tubing.
    d. Insert the end of the suction tube over the cone-shaped end of the valve housing.
    e. Thread the coupling nut onto the foot valve housing and tighten hand-tight.
    f. Place the new foot valve in the chemical solution bucket.
    g. Make sure that the suction tubing is completely vertical and two inches from the bottom of the chemical solution bucket.
4. Start up the TWPS from Standby Shutdown and prime the pump as described in the **Chemical Injection Pump Replacement** procedure earlier in this WP.
5. Operate the chemical injection pump and check for leaks.

REPAIR

Chemical Injection Pump Repair / Four-Function Valve (V-612, V-622 and V-632):

Parts (TM 10-4610-309-24P):
    Four-function valve
Material:
    Antiseizing tape (WP 0038, Table 1, item 49, 50)
    Five gallon bucket
Equipment Condition:
    TWPS electric power "ON"

Replace the four-function valve on a chemical injection pump as follows:

1. Remove the chemical injection pump four-function valve as follows (see Figure 8):
    a. Depressurize the chemical injection pump discharge tubing as described in the **Chemical Injection Pump Replacement** procedure earlier in this WP.
    b. Remove the foot valve from the chemical solution bucket and place it in the empty five-gallon bucket to drain the suction line.
    c. Remove the return tubing from the side of the four-function valve.
    d. Remove the discharge tubing from the top of the four-function valve.
    e. Remove the old four-function valve from the top of the pump head.
    f. Remove the clamp ring and coupling nut from the discharge tubing.
    g. Retain the flat washer (clear washer inside the bottom of the four-function valve), the discharge cartridge valve, and the O-ring.

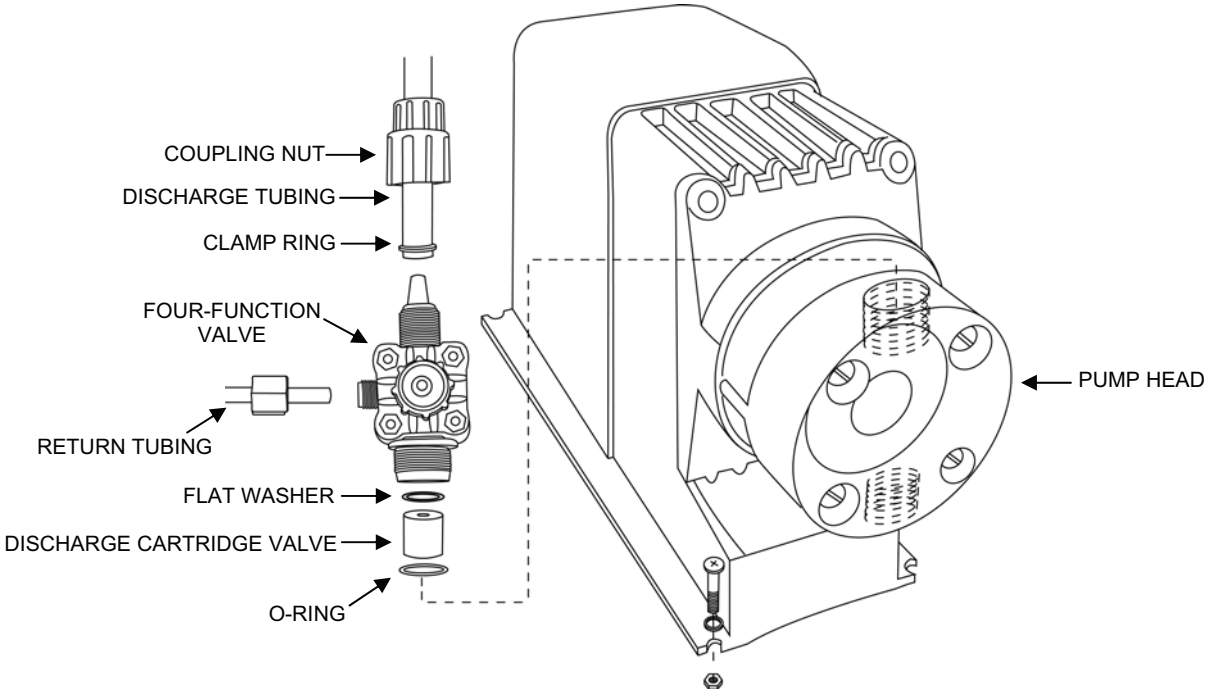

Figure 8. Chemical Injection Pump Four-Function Valve Replacement.

2. Install the new four-function valve as follows (see Figure 8):
   a. Insert the o-ring all the way down into the opening at the top of the pump head.
   b. Set the discharge cartridge valve into the opening at the top of the pump head with the flat end of the cartridge up.
   c. Insert the flat washer into the bottom of the new four-function valve.
   d. Apply anti-seize tape to the bottom threads only of the four-function valve.
   e. Screw in the new four-function valve until it contacts the O-ring.
   f. Add an additional 1/8 – 1/4 turn to prevent leaks.
   g. Slide the new coupling nut over the discharge tube so that the nut threads are facing toward the new four-function valve.
   h. Install the clamp ring about ¼ inch onto the end of the tubing.
   i. Thread the coupling nut onto the four-function valve and tighten hand-tight.

NOTE
To ensure priming, the return tubing must not be submerged in the solution.

   j. Connect the return tubing to the side of the new four-function valve.
   k. Place the foot valve back into the chemical solution bucket.
   l. Make sure that the suction tubing is completely vertical and two inches from the bottom of chemical solution bucket.
   m. Start up the TWPS from Standby Shutdown and prime the pump as described in the **Chemical Injection Pump Replacement** procedure earlier in this WP.
   n. Operate the pump and check for leaks.

Chemical Injection Pump Repair / Pump Head Assembly:

Parts:
Pump Head Assembly (TM 10-4610-309-23P)
Material:
Five gallon bucket
Equipment Condition:
TWPS Electrical Power “ON” initially and “OFF” when specified

Replace the pump head assembly on a chemical injection pump as follows:

1. Remove the pump head assembly from the chemical injection pump as follows (see Figure 9):
   a. Depressurize the discharge tubing and drain and flush the chemical injection pump as described in the **Chemical Injection Pump Replacement** procedure earlier in this WP.
   b. Place the TWPS in Standby Shutdown without draining down, including switching the main circuit breaker on the power distribution panel (PDP) to OFF (WP 0013, TM 10-4610-309-10).
   c. Remove the discharge, return, and suction tubes from the pump.
   d. Remove the 4 screws, washers, and nuts that secure the pump to the mounting base and reposition the pump as desired for easy access to the pump head assembly.
   e. Remove the four-function valve, flat washer, discharge cartridge valve, and O-ring from the top of the pump head.
   f. Remove the suction valve housing, flat washer, suction cartridge valve, and O-ring from the bottom of the head.
   g. Remove the four bolts and washers that secure the pump head to the chemical injection pump drive assembly and remove the pump head assembly.

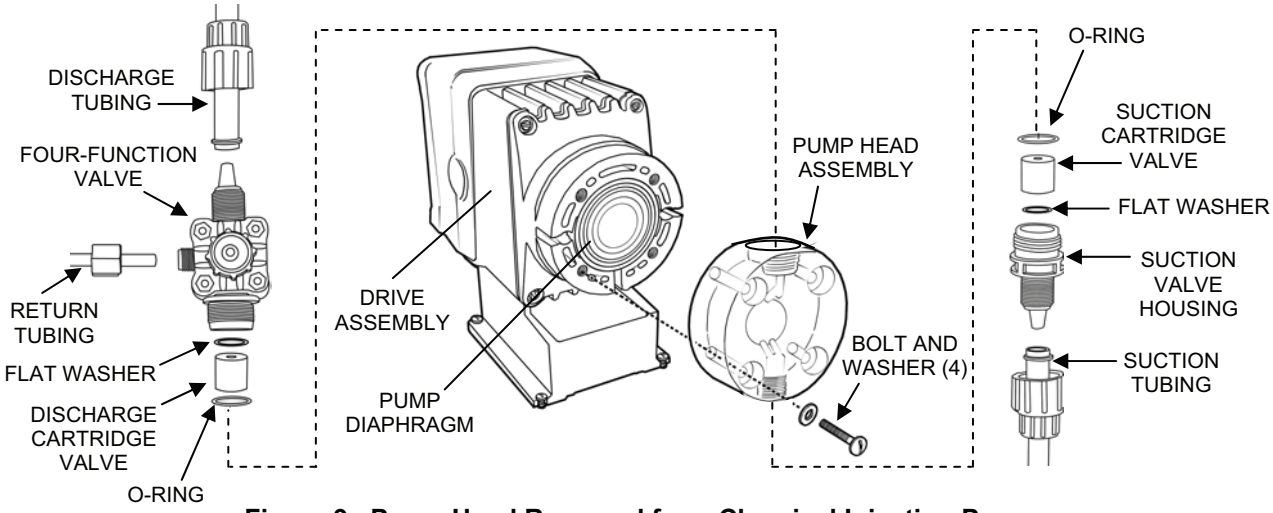

Figure 9. Pump Head Removed from Chemical Injection Pump.

2. Inspect the condition of the pump diaphragm before installing the new pump head assembly. Make sure the pump diaphragm is properly positioned with the spacer as shown in Figure 10. If the diaphragm is damaged or improperly positioned, replace or reposition the diaphragm. Refer to the **Chemical Injection Pump Repair / Pump Diaphragm** procedure that follows this procedure.

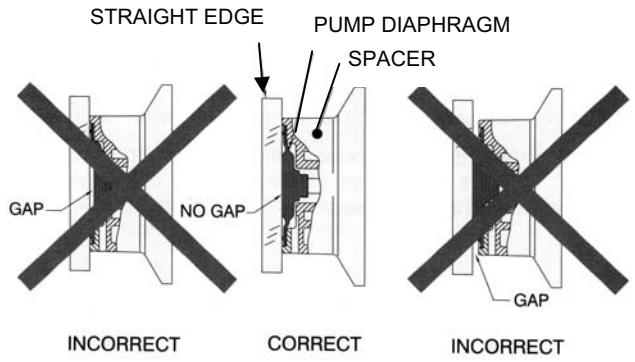

Figure 10. Pump Diaphragm Positioning.

3. Install the new pump head assembly as follows:
    a. Secure the pump head assembly to the pump drive assembly with the 4 mounting bolts.
    b. Install the suction O-ring, cartridge valve, flat washer, and suction valve housing into the bottom of the head.
    c. Install the O-ring, discharge cartridge valve, flat washer, and four-function valve into the top of the pump head.
    d. Position the pump and secure it to the mounting plate using the 4 screws, washers and nuts removed earlier.
    e. Reconnect the discharge, return, and suction tubes to the pump.
4. Startup the TWPS from Standby Shutdown and prime the chemical injection pump as described in the **Chemical Injection Pump Replacement** procedure earlier in this WP.
5. Check the new pump head for leaks.

Chemical Injection Pump Repair / Pump Diaphragm:

Parts:
Pump Diaphragm (TM 10-4610-309-23P)
Material:
Five gallon bucket
Equipment Condition:
TWPS Electrical Power “ON” initially and “OFF” when specified

Replace the Pump Diaphragm on the chemical injection pump as follows:

1. Remove the Chemical Injection Pump Diaphragm as follows:
    a. Depressurize the discharge tubing and drain and flush the chemical injection pump as described in the **Chemical Injection Pump Replacement** procedure earlier in this WP.
    b. Place the TWPS in Standby Shutdown without draining down, including switching the main circuit breaker on the power distribution panel (PDP) to OFF (WP 0013, TM 10-4610-309-10).
    c. Remove the discharge, return, and suction tubes from the pump.

d. Remove the 4 screws, washers, and nuts that secure the pump to the mounting base and reposition the pump as desired for easy access to the pump head assembly.
e. Remove the four bolts and washers that secure the pump head to the chemical injection pump drive assembly and remove the pump head assembly (see Figure 9).
f. Remove the pump diaphragm from the spacer by carefully grasping the outer edge of the diaphragm and turning it counter-clockwise (see Figure 11).

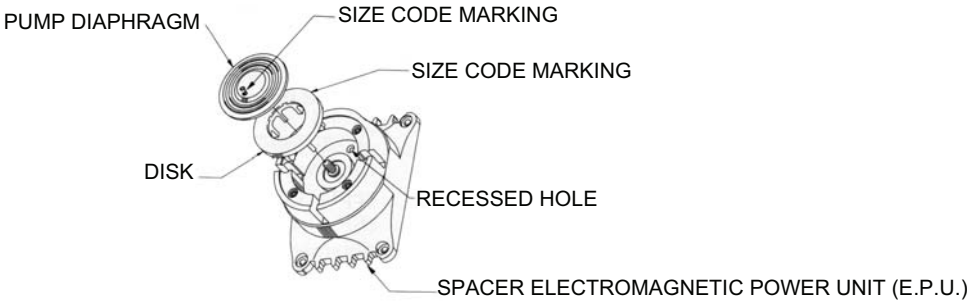

Figure 11. Pump Diaphragm Removed from Pump Head Spacer.

2. Install the new pump diaphragm as follows (see Figure 11):
   a. Check that the size code on the new diaphragm matches the size code on the on the front of the disk.
   b. Switch the main circuit breaker on the power distribution panel (PDP) to “ON”.
   c. Turn the pump switch on the operator control panel (OCP) to “ON”.
   d. Start the pump by turning the speed knob clockwise.
   e. Turn the stroke knob to “90%”.
   f. With the pump stroking (running), screw on the new pump diaphragm clockwise until the center begins to buckle inward, then stop the pump.
   g. Turn the pump switch on the OCP to “OFF”.
   h. Switch the main circuit breaker on the PDP to “OFF”.
   i. Grasp the outer edge of the diaphragm and screw it in or out as needed so that the center of the diaphragm is flush with the outside edge of the spacer (see Figure 12).

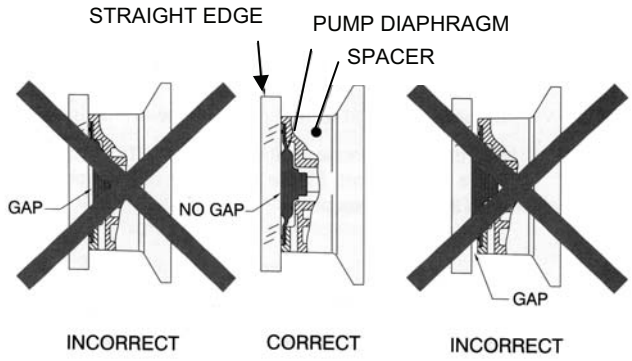

Figure 12. Diaphragm Positioning.

   j. Once the diaphragm is properly positioned, secure the pump head to the spacer using the four screws.

k. Tighten the four screws in a criss-cross pattern.
l. Position the pump and secure it to the mounting plate using the 4 screws, washers and nuts removed earlier.
m. Reconnect the discharge, return, and suction tubes to the pump.

3. Startup the TWPS from Standby Shutdown and prime the chemical injection pump as described in the **Chemical Injection Pump Replacement** procedure earlier in this WP.
4. Operate the chemical injection pump and check for leaks.
5. After one week of operation, recheck the pump head screws and tighten if necessary.

Chemical Injection Pump Repair / Discharge Cartridge Valve, O-Ring, and Flat Washer:

Parts (TM 10-4610-309-23P):
Discharge cartridge (valve) assembly
O-ring
Flat washer
Material:
Antiseizing tape (WP 0038, Table 1, item 49, 50)
Five gallon bucket
Equipment Condition:
TWPS Electrical Power “ON”

Replace the chemical injection pump discharge cartridge valve, o-ring, and flat washer as follows:

1. Depressurize the chemical injection pump discharge tubing as described in the **Chemical Injection Pump Replacement** procedure earlier in this WP.
2. Remove the foot valve from the chemical solution bucket and place it in the empty five-gallon bucket to drain the suction line.
3. Remove the chemical injection pump discharge valve assembly as follows (see Figure 13):
   a. Remove the return tubing from side of the four-function valve.
   b. Remove the discharge tubing from the top of the four-function valve.
   c. Remove the four-function valve from the top of the pump head.
   d. Remove and discard the discharge cartridge valve, O-ring, and flat washer from inside the top of the pump head.

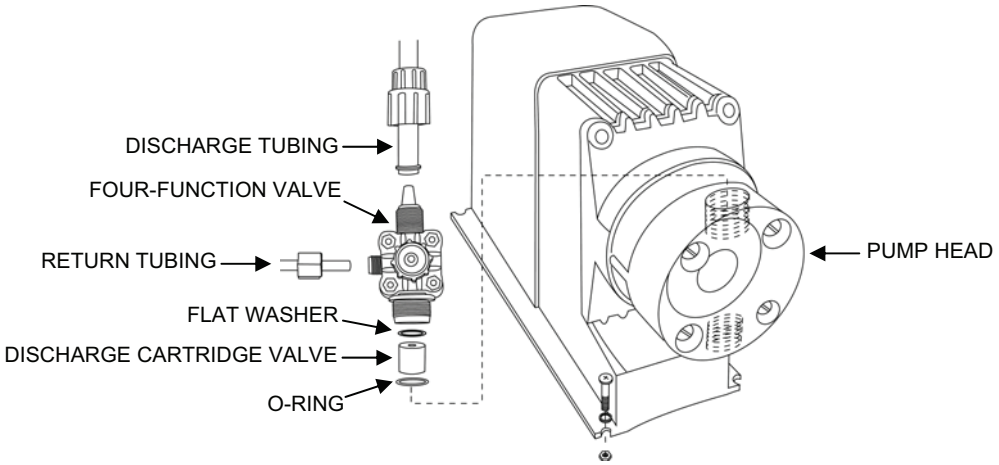

Figure 13. Chemical Injection Pump Discharge Cartridge, O-Ring, and Flat Washer Replacement.

4. Install the new discharge cartridge valve, o-ring, and flat washer as follows (see Figure 13):
    a. Insert the new O-ring all the way down into the opening at the top of the pump head.
    b. Set the discharge cartridge valve into the opening at the top of the pump head with the flat end of the cartridge up.
    c. Insert the new flat washer into the bottom of the four-function valve.
    d. Apply anti-seize tape to the bottom threads only of the four-function valve.
    e. Screw the four-function valve into the opening at the top of the pump head until the valve contacts the O-ring.
    f. Add an additional 1/8 – 1/4 turn to prevent leaks.
    g. Connect the return tubing to the threaded port at the side of the four-function valve.

NOTE
To ensure priming, the return tubing must not be submerged in the solution.

    h. Connect the discharge tubing to the top of the four-function valve assembly. Thread the coupling nut onto the four-function valve and tighten hand-tight.
5. Place the foot valve back into the chemical solution bucket.
6. Make sure that the suction tubing is completely vertical and two inches from the bottom of chemical solution bucket.
7. Prime the chemical injection pump as described in the **Chemical Injection Pump Replacement** procedure earlier in this WP.
8. Operate the pump and check for leaks.

Chemical Injection Pump Repair / Suction Valve Assembly:

Parts (TM 10-4610-309-23P):
    Suction valve assembly
Material:
    Five gallon bucket
Equipment Condition:
    TWPS Electrical Power “ON”

Replace the chemical injection pump suction valve assembly as follows:

1. Depressurize the chemical injection pump discharge tubing as described in the **Chemical Injection Pump Replacement** procedure earlier in this WP.
2. Remove the foot valve from the chemical solution bucket and place it in the empty five-gallon bucket to drain the suction line.
3. Remove the chemical injection pump suction valve assembly as follows (see Figure 14):
    a. Unscrew the coupling nut from suction valve housing and pull the suction tube off the valve housing.
    b. Remove and discard the clamp ring and coupling nut from the suction tubing.
    c. Unscrew the suction valve housing from the bottom of the pump head.
    d. Remove and discard the suction cartridge valve, o-ring, and flat washer from inside the bottom of the pump head.

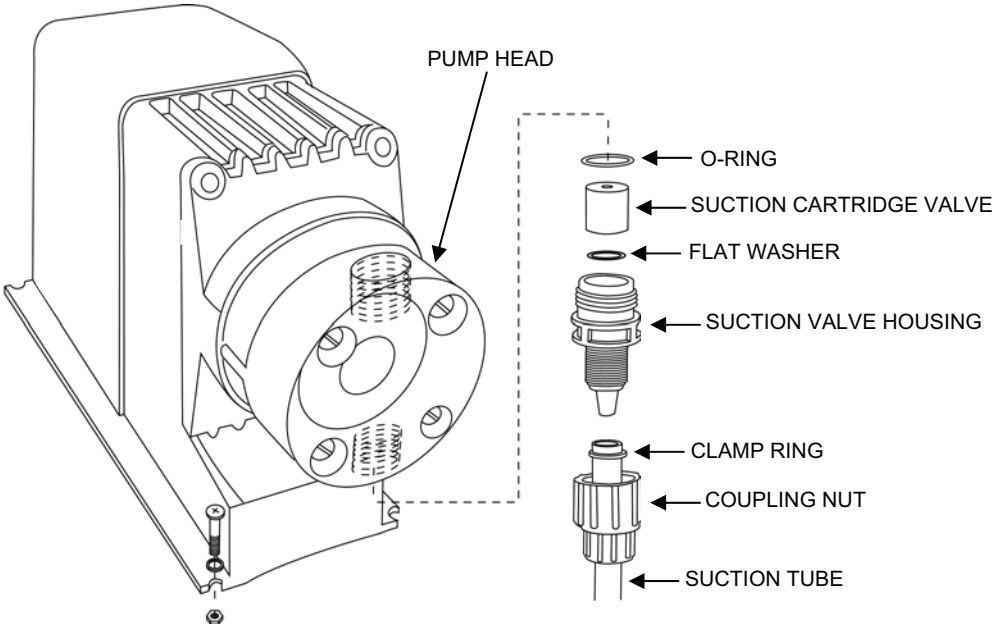

Figure 14. Chemical Injection Pump Suction Valve Assembly Replacement.

4. Install the new suction valve assembly as follows (see Figure 14):
    a. Insert the new O-ring all the way into the opening at the bottom of the pump head.
    b. Insert the new flat washer into the suction valve housing.
    c. Set the suction cartridge valve into the suction valve housing with the flat end of the cartridge in.
    d. Thread the suction valve housing into the opening at the bottom of the pump head until it contacts the O-ring.
    e. Add an additional 1/8 – 1/4 turn to prevent leaks.
    f. Slide the new coupling nut over the suction tubing so that the nut threads are facing toward the end of the tubing.
    g. Install the clamp ring about 1/4–inch onto the end of the tubing.
    h. Connect the suction tubing to the suction valve housing.
    i. Thread the coupling nut onto the valve housing and tighten hand-tight.
5. Place the foot valve back into the chemical solution bucket.
6. Make sure that the suction tubing is completely vertical and two inches from the bottom of chemical solution bucket.
7. Prime the pump as described in the **Chemical Injection Pump Replacement** procedure earlier in this WP.
8. Operate the pump and check for leaks.

END OF WORK PACKAGE

TACTICAL WATER PURIFICATION SYSTEM (TWPS) FIELD MAINTENANCE PROCEDURES PRODUCT WATER DISTRIBUTION SYSTEM

0019 00

THIS SECTION COVERS:
Inspect, Repair, Replace

INITIAL SETUP:

Maintenance Level
Field
Tools
Army: General Mechanic's Tool Kit (WP 0037)
Marine Corps: Common No. 1 Tool Set (WP 0037)
References:
Refer to TM 10-4610-309-23P for repair parts information
Personnel Required
Two
Equipment Condition
TWPS removed from service or during operation as required

GENERAL:

This work package contains information and instructions for repairing and replacing components in the Product Water Distribution System. These include:

- P-7 Skid Frame Replacement
- P-7 Skid Junction Box Replacement
- P-7 Skid Power Cable Replacement
- P-7 Pump Motor Cable Replacement
- P-7 Pump Replacement
- P-7 Pump Motor Replacement
- Product Water Distribution Hose Repair/Replacement
- Adaptor Assembly A-08 Repair/Replacement
- Adaptor Assembly A-07 and A-15 Repair/Replacement
- Dispensing Nozzle V-523 Replacement
- Auxiliary Hose Assembly P06 Replacement
- P-7 and P-8 Pump Overhaul

Refer to TM 10-5430-237-12&P (Marine Corps TM 01034E-12&P/1) for inspection and repair procedures for the collapsible product water distribution tank.

REPLACE

P-7 Skid Frame Replacement:

Parts (TM 10-4610-309-23P):
P-7 pump skid frame
Equipment Condition:
P-7 Pump assembly removed from service and drained.

Inspect the P-7 pump skid frame for damage. If frame damage is repairable by welding, weld to repair. Replace the frame if it is beyond repair.

Replace the skid frame as follows (see Figure 1):

1. Disconnect the motor cable at the junction box.
2. Remove the four screws and washers that secure the junction box to the skid frame, and remove the junction box.
3. Remove the four bolts, flat washers, and lock washers that secure the pump/motor unit to the frame.

WARNING

Two person lift. Two people are required to safely move the pump/motor assembly. Lift with your legs, not your back. Failure to observe this warning may result in back injury.

4. Slide the pump/motor unit out the side of the frame.
5. Position the pump/motor unit onto the new frame and secure it with the four bolts, flat washers, and lock washers.
6. Attach the junction box to the new frame using the four screws and washers. Be sure to orient the box so the side with the receptacles is facing inward.
7. Connect the electric motor cable to the proper connector on the junction box.

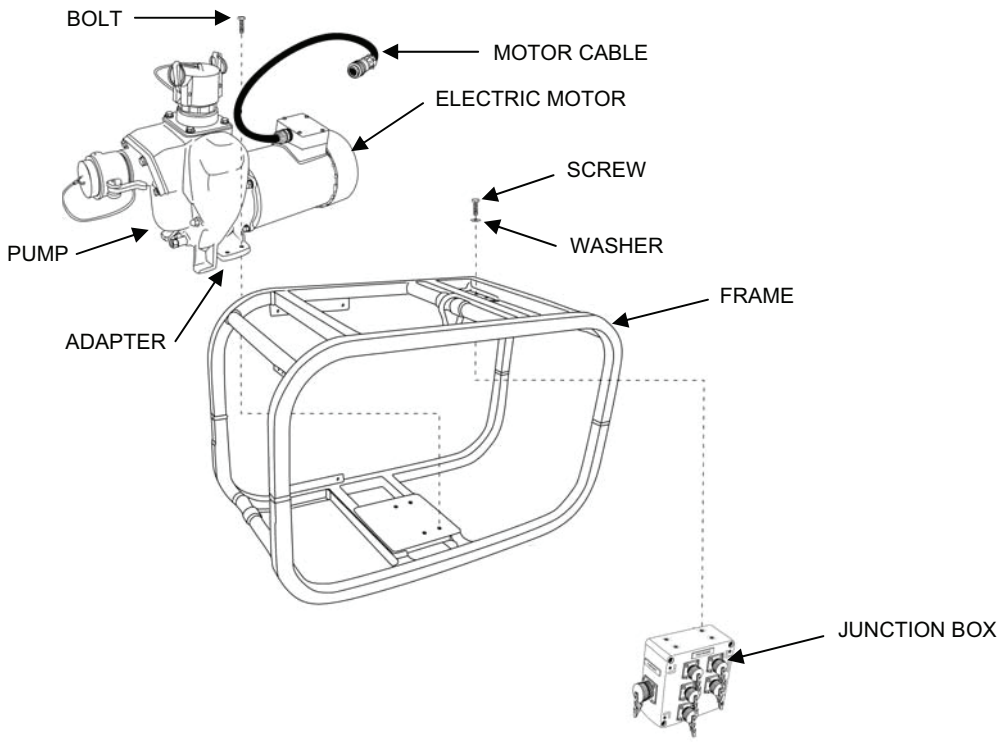

Figure 1. Product Water Pump P-7 Assembly Components.

P-7 Skid Junction Box Replacement:

Parts (TM 10-4610-309-23P):
P-7 pump skid junction box
Equipment Condition:
P-7 pump assembly removed from service

Inspect the junction box for damage or corroded connectors. Replace the box if damage or corrosion is severe enough to make unsafe or non-functional as follows (see Figure 1):

1. Disconnect the motor cable from the junction box.
2. Remove the four screws and washers that secure the junction box to the frame. Remove the junction box.
3. Secure the new junction box to the frame using the four screws and washers. Be sure to orient the box so the side with the receptacles is facing inward.
4. Connect the motor cable to the proper connector on the junction box.

P-7 Skid Power Cable Replacement:

Parts (TM 10-4610-309-23P):
P-7 skid power cable
Equipment Condition:
P-7 Pump assembly removed from service

Inspect the power cable that connects the P-7 Pump Junction Box to the Power Distribution Panel. If the cable or the cable connectors are damaged so that it is unsafe to use, replace the cable.

P-7 Pump Motor Cable Replacement:

Parts (TM 10-4610-309-23P):
P-7 Pump Motor Cable
Equipment Condition:
P-7 Pump assembly removed from service

Inspect the motor cable for damage. If the cable or the cable connectors are damaged so that it is unsafe to use, replace the cable.

1. Disconnect the motor cable at the junction box.
2. Remove the motor terminal box cover.
3. Inspect the terminal box gasket and replace if needed.
4. Tag and disconnect the motor terminal wires from the motor cable wires.
5. Unscrew the cable ring nut from the terminal box.
6. Pull the cable end out of the terminal box and discard the old motor cable.
7. Insert the wire end of the new cable into the terminal box and secure with the ring nut.
8. Connect the motor cable wires to the motor terminal wires in accordance with the tags.
9. Install the terminal box cover gasket and cover and secure with the two nuts.

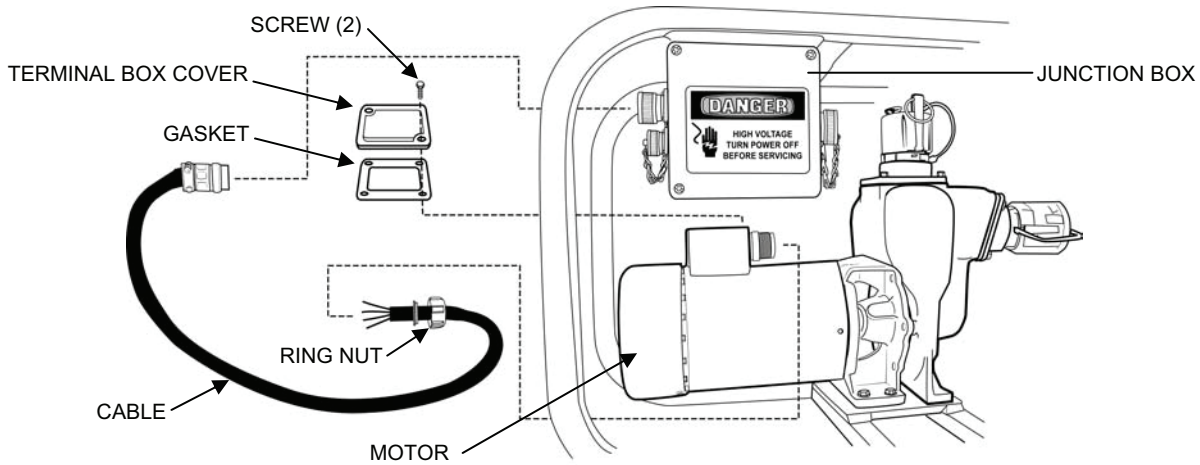

Figure 2. P-7 Pump Motor Cable Replacement.

P-7 Pump Replacement:

Parts (TM 10-4610-309-23P):
P-7 Pump
Material:
Cloth, Abrasive (WP 0038, Table 1, item 14)
Corrosion Preventive Compound (WP 0038, Table 1, item 19)
Sealing Compound (WP 0038, Table 1, item 41)
Clean, dry rags (WP 0038, Table 1, item 39)
Equipment Condition:
P-7 Pump assembly removed from service and drained.

Replace the P-7 pump as follows (see Figure 3):

1. Remove the pump as follows:
   a. Disconnect the pump motor cable from the junction box.
   b. Remove the four bolts and washers that attach the pump/motor unit to the skid frame.

WARNING

Two person lift. Two people are required to safely move the pump/motor unit. Lift with your legs, not your back. Failure to observe this warning may result in back injury.

   c. Slide the pump/motor unit out the side of the skid.
   d. Remove the six nuts that attach the pump housing to the adapter, then loosen and remove the pump housing.
   e. Remove and discard the coupling clamp assembly.
   f. Carefully pry the impeller/drive sleeve assembly off the motor drive shaft and discard it.
   g. Remove the four cap screws and lock washers that attach the adapter to the motor.
   h. Discard the adapter.

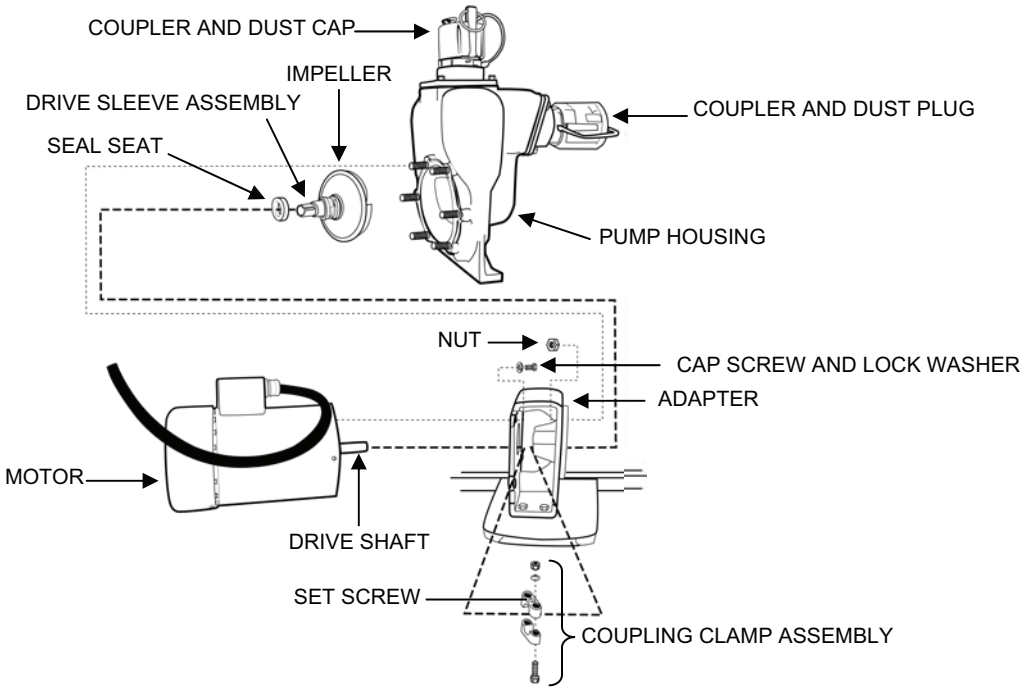

Figure 3. P-7 Pump and Motor Removal.

2. Install a new pump as follows:
   a. Polish the motor shaft with fine abrasive cloth to remove any rust or corrosion.
   b. Lubricate the shaft and the inside diameter of the drive sleeve on the new pump with corrosion preventive compound.

CAUTION

Improper assembly can result in damage to the drive sleeve and the motor drive shaft. Do NOT place a key between the drive shaft and the drive sleeve. Do NOT force the drive sleeve onto the shaft. Failure to observe this caution can make impeller clearance adjustments and the future removal of the drive sleeve difficult, and may result in damage to the drive sleeve and/or the motor drive shaft.

Replacement pump assemblies come with a pump housing, impeller, drive sleeve assembly, coupling clamp assembly, and adapter already assembled together. A temporary impeller spacer is installed inside the pump between the impeller and wear plate. Do NOT rotate the pump until the spacer has been removed, or equipment damage may result. Do NOT remove the spacer until the motor has been mounted to the pump and the coupling clamp assembly has been tightened.

c. Loosen but do not remove the coupling clamp assembly on the new pump.
d. Position the replacement pump, align the coupling clamp set screw, a drive sleeve slat, and the engine drive shaft keyway and slide the drive sleeve onto the drive shaft.

NOTE

If the shaft does not easily slide into the drive sleeve, it may be necessary to remove burrs from the shaft.

e. Attach the motor to the pump adapter using the four cap screws and four lock washers.
f. Torque the coupling clamp assembly nuts to 216 in.-lbs.
g. Tighten the coupling clamp set screw into the drive shaft keyway.

WARNING

Two person lift. Two people are required to safely move the pump/motor unit. Lift with your legs, not your back. Failure to observe this warning may result in back injury.

h. Position the pump/motor unit on the skid and bolt it in place using four bolts and washers.
i. Remove the plastic protective caps from the pump inlet and outlet openings.
j. Remove the temporary impeller spacer by pulling it out through the pump outlet opening.

3. Remove the adapter and dust cap from the outlet of the old pump and install them on the new pump. Use sealing compound on the coupler threads (WP 0038, Table 1, item 44).
4. Remove the coupler and dust plug from the inlet of the old pump and install them on the new pump. Use sealing compound on the coupler threads (WP 0038, Table 1, item 44).
5. Remove the drain valve from the old pump. Remove the drain plug from the new pump and install the drain valve on the new pump. Use sealing compound on the valve threads (WP 0038, Table 1, item 44).
6. Connect the motor cable to the proper receptacle on the junction box.
7. Place the pump back into service and inspect it for leaks.

P-7 Pump Motor Replacement:

Parts (TM 10-4610-309-23P):
P-7 Electric Motor Assembly
Kit, Pump Seal Repair
Material:
Cloth, Abrasive (WP 0038, Table 1, item 14)
Corrosion Preventive Compound (WP 0038, Table 1, item 19)
Glycerin (WP 0038, Table 1, item 24)
Clean, dry rags (WP 0038, Table 1, item 39)
Sealing Compound (WP 0038, Table 1, item 40)
Equipment Condition:
P-7 Pump assembly removed from service and drained.

NOTE

The pump must be taken apart to separate it from the motor. This is because the impeller clearance must be set when the pump is installed on the new motor. The seal seat, seal assembly, housing gasket, and drive sleeve will also be replaced.

Replace the P-7 Pump electric motor as follows (see Figure 4 and Figure 5):

1. Remove the pump motor as follows:
   a. Disconnect the motor cable at the skid junction box.
   b. Remove the six nuts that attach the pump housing to the adapter.
   c. Remove the pump housing and gasket. Discard the gasket.
   d. Remove the coupling clamp assembly.

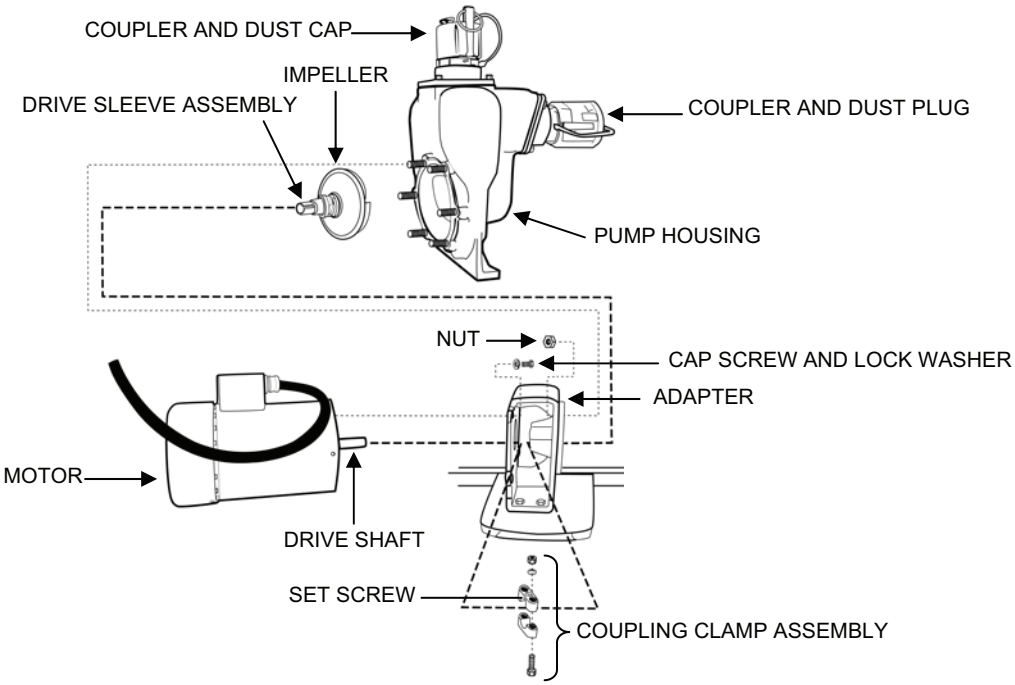

Figure 4. Pump P-7 Electric Motor Replacement.

   e. Carefully pry the impeller/drive sleeve assembly off the motor drive shaft.
   f. Remove the lock nut and drive sleeve from the impeller (see Figure 5). Discard the sleeve and the seal assembly. Attach the new sleeve to the impeller using the lock nut.
   g. Lubricate the new seal assembly with glycerin. With the rubber boot end toward the impeller, twist and slide the assembly onto the drive sleeve.
   h. Remove the four cap screws and four lock washers that attach the motor to the adapter and remove the motor.
   i. Push the seal seat out of the adapter and discard it.
   j. Clean the adapter bore and mounting faces.
   k. Clean the new seal seat and lubricate it with glycerin. Insert the beveled end of the seal seat into the adapter bore and press it into the adapter.

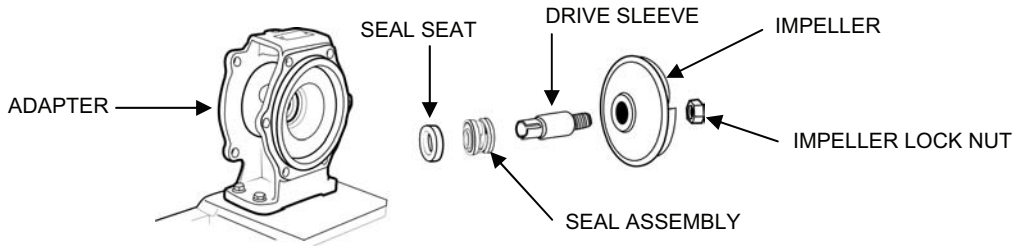

Figure 5. Drive Sleeve, Impeller, and Seal Assembly.

2. Install the new motor as follows:
   a. If necessary, polish the new motor's drive shaft with fine abrasive cloth to remove any rust or corrosion.
   b. Attach the new motor to the adapter using the four cap screws and four lock washers.
   c. Disconnect the motor cable from the old motor and attach it to the new motor. Refer to **REPLACE** and **P-7 Pump Motor Cable.**
   d. Lubricate the motor drive shaft and the inside diameter of the drive sleeve with corrosion preventive compound.

CAUTION

Improper assembly can result in damage to the drive sleeve and the motor drive shaft. Do NOT place a key between the drive shaft and the sleeve. Do NOT force the drive sleeve onto the shaft. Failure to observe this caution can make impeller clearance adjustments and the future removal of the drive sleeve difficult, and may result in damage to the drive sleeve and/or the motor drive shaft.

   e. Slide the drive sleeve and impeller assembly onto the drive shaft.

NOTE

If the sleeve does not easily slide onto the shaft, it may be necessary to remove burrs from the shaft.

   f. Install the coupling clamp assembly but do not tighten it.
   g. Place a new housing gasket between the adapter and the pump housing.
   h. Fit the pump onto the adapter and thread a nut on two opposing threaded studs to secure the pump to the adapter. Tighten the two nuts.
3. Set the gap between the impeller and the pump wear plate as follows (see Figure 6):
   a. Remove the four cap screws and 4 lock washers that secure the outlet flange to the pump housing.
   b. Carefully remove the pump flange to avoid damaging the gasket between the flange and the pump housing.
   c. If the gasket is damaged, replace it.
   d. Look through the outlet into the pump. Turn the impeller drive sleeve and impeller by hand until you see the impeller near the wear plate.
   e. Insert a 0.015 – inch feeler gauge between the impeller and wear plate. Move the impeller forward or backward as needed to provide a gap of 0.015 to 0.017-inch.

f. Turn the impeller drive sleeve / impeller assembly by hand to make sure that there is a minimum gap of 00.015-inch through the entire rotation of the impeller.
g. Make sure the coupling clamp set screw, a drive sleeve slat, and the motor shaft keyway are aligned.
h. Tighten the coupling clamp assembly to secure the impeller drive sleeve to the motor drive shaft. Torque the nuts to 216 in.-lbs.
i. Tighten the coupling clamp set screw into the drive shaft keyway.

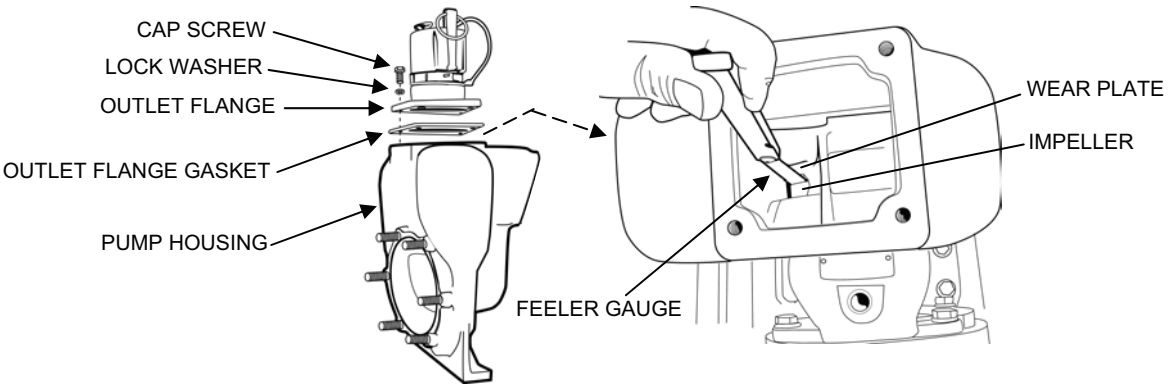

Figure 6. P-7 Pump Impeller Clearance Adjustment.

4. Complete the installation as follows:
   a. Apply sealing compound to the threads of the remaining four threaded studs extending from the pump housing through the adapter (WP 0038, Table 1, item 40). Install the nuts onto the studs.
   b. Remove the two nuts initially installed onto opposing studs. Apply sealing compound to the stud threads and reinstall the nuts (WP 0038, Table 1, item 40).
   c. Reinstall the pump outlet flange and gasket.
5. Connect the motor cable to the proper receptacle on the junction box.
6. Place the pump back into service and inspect it for proper rotation and leaks.

Product Water Distribution Hose Repair / Replacement:

Parts (TM 10-4610-309-23P):
- Hose assembly P02
- Hose assembly P03
- Hose assembly P04
- Hose assembly P05
- Hose assembly P06
- Gaskets

Equipment Condition:
- TWPS removed from service

Inspect the hoses and hose connectors for leaks, cracks, or other damage. Replace the entire hose assembly if damage is found. Check the female connectors of all hose assemblies for missing or damaged gaskets, and replace as necessary.

Adaptor Assemblies A-08 Repair / Replacement:

Parts (TM 10-4610-309-23P):
Adaptor assembly A-08
Gaskets
Equipment Condition:
TWPS removed from service

Inspect the adaptor assemblies for leaks. If a leak is found at a coupler, check for a damaged or missing gasket and replace as required. If a significant leak cannot be stopped by replacing the gasket, replace the entire adapter assembly.

Adaptor Assembly A-07 and A-15 Repair / Replacement:

Parts (TM 10-4610-309-23P):
Adaptor assembly A-07
Adaptor assembly A-15
Gaskets
Equipment Condition:
TWPS removed from service

Inspect the adaptor assemblies, including their valves, for leaks. If a leak is found at a coupler, check for a damaged or missing gasket and replace as required. If a significant leak cannot be stopped by replacing the gasket, or if the valve does not function properly, replace the entire adapter assembly.

Dispensing Nozzle V-523 Replacement:

Parts (TM 10-4610-309-23P):
Dispensing nozzle
Equipment Condition:
TWPS removed from service

Inspect the dispensing nozzles for damage or leaks. Replace a nozzle if it has significant damage or leakage.

Auxiliary Hose Assembly P06 Replacement:

Parts (TM 10-4610-309-23P):
Auxiliary hose assembly P06
Equipment Condition:
TWPS removed from service

Inspect hose and valve for damage and leaks. If a leak is found at a coupler, check for a damaged or missing gasket and replace as required. If a significant leak cannot be stopped by replacing the gasket, or if the valve is damaged or does not function properly, replace the valve.

REPAIR

P-7 and P-8 Pump Overhaul:

Parts (TM 10-4610-309-23P):
- Kit, Pump Overhaul
- Flapper Assembly
- Outlet Flange Gasket

Materials:
- Cloth, Abrasive (WP 0038, Table 1, item 14)
- Corrosion Preventive Compound (WP 0038, Table 1, item 19)
- Glycerin (WP 0038, Table 1, item 24)
- Sealing compound (WP 0038, Table 1, item 40)
- Clean, dry rags (WP 0038, Table 1, item 39)

Equipment Condition:
- Pump assembly removed from service and drained.

This section provides instructions for overhauling the P-7 or P-8 (Army TWPS only) pump by replacing the internal components. The pump should be overhauled if its flow rate has noticeably decreased, or if inspection of the pump during disassembly for some other maintenance task (such as engine/motor replacement) shows that the impeller or wear plate is damaged or badly corroded. Additional instructions in this section describe how to replace the pump inlet flapper assembly and the outlet flange gasket.

NOTE

Whenever the P-7 or P-8 pump is disassembled for any of the maintenance tasks in this work package, replace the drive sleeve, seal seat, seal assembly, and housing gasket regardless of their condition. These components are included in the seal repair kit. The pump overhaul kit includes these components plus the impeller, wear plate, and wear plate mounting screws and gaskets.

1. (P-8 Pump Skid only) Remove the fuel tank assembly from the skid as follows (see Figure 7):
   a. Close the fuel tank fuel cock.
   b. Uncouple the fuel supply and return line quick disconnect couplings.
   c. Lift the fuel tank assembly off the skid.

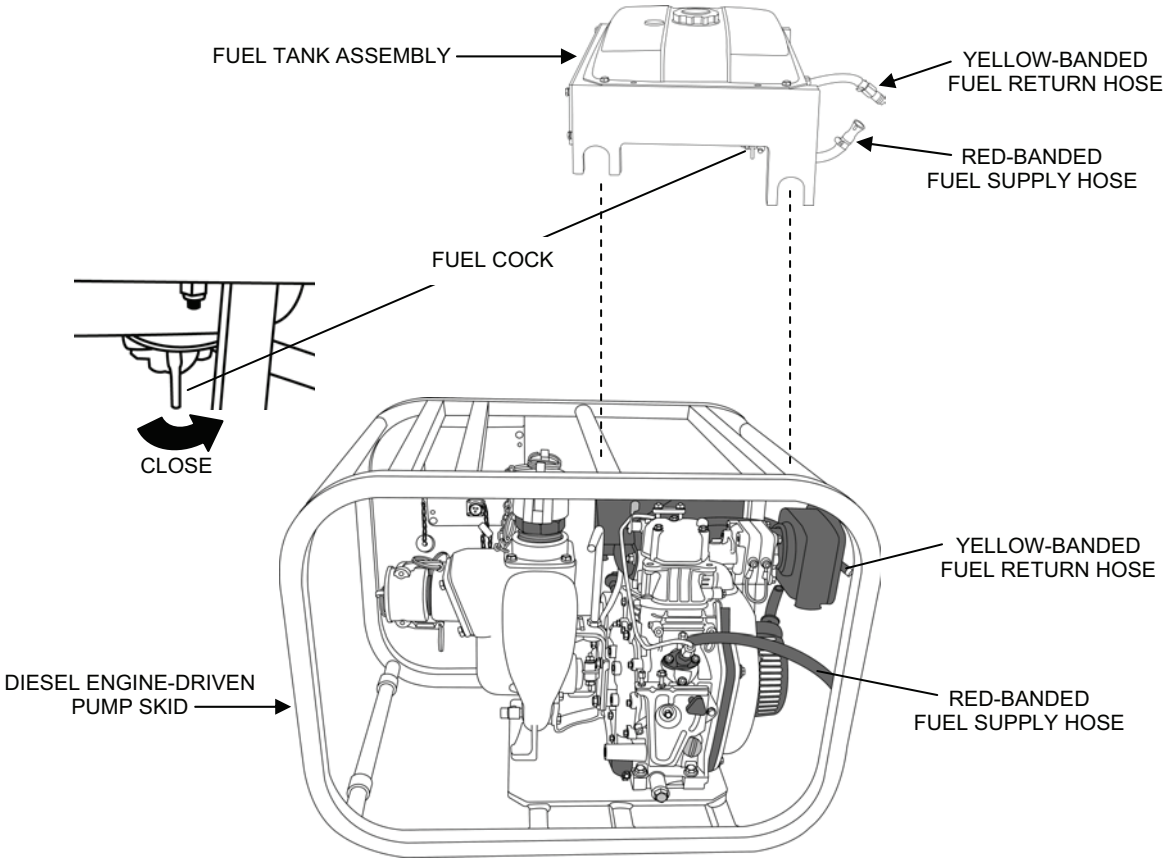

Figure 7. Extended Distribution Pump P-8 Skid Fuel Tank Assembly Removal.

2. Remove the pump from the diesel engine (P-8 Pump skid) or remove the pump from the motor (P-7 Pump skid) as follows (see Figure 8):
    a. Open the pump drain valve and drain any remaining water from the pump.
    b. Remove the six nuts that attach the pump housing to the adapter.
    c. Loosen and remove the pump housing and gasket. Discard the gasket.
    d. Remove and discard the coupling clamp assembly.
    e. Carefully pry the drive sleeve/impeller assembly off of the diesel engine (P-8) or electric motor (P-7) drive shaft. Discard the drive sleeve/impeller assembly.
    f. Remove the four cap screws, four lock washers, and four flat washers that attach the adapter to the diesel engine (P-8), or the four cap screws and four lock washers that attach the adapter to the electric motor (P-7) and remove the adapter.
    g. Push the seal seat out of the adapter and discard the seal seat.
    h. Remove and discard the two acorn nuts and two gaskets from the back of the pump housing.
    i. Remove and discard the two flat head screws and the wear plate.

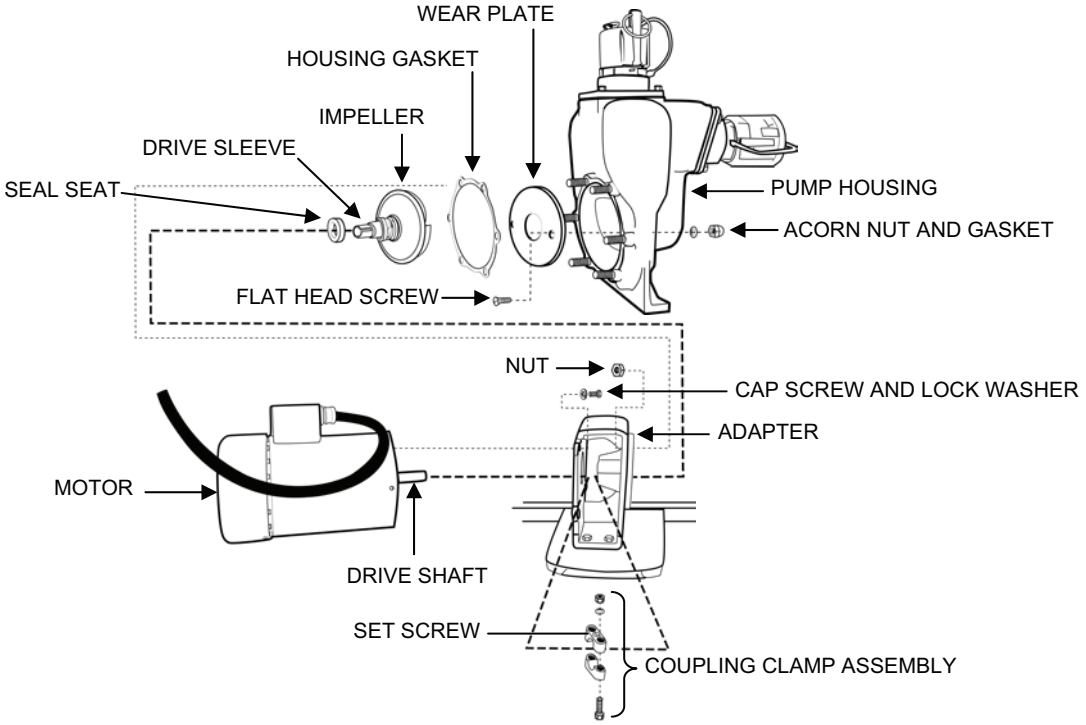

Figure 8. P-8 and P-7 Pump, Adapter, and Wear Plate Removal.

3. Assemble the pump with replacement parts as follows (see Figure 9):
    a. Insert the new wear plate into the pump housing and secure it to the housing with the new flat head screws and gaskets and the acorn nuts.
    b. Insert the new drive sleeve into the new impeller and secure it to the impeller using the impeller lock nut.
    c. Lubricate the inner diameter of the new seal assembly with glycerin or a comparable lubricant.
    d. With the rubber boot end of the seal assembly toward the impeller, twist and slide the seal assembly onto the drive sleeve.
    e. Clean the adapter bore and mounting faces.
    f. Clean the new seal seat and lubricate it with glycerin or a comparable lubricant.
    g. Insert the beveled end of the seal seat into the bore of the adapter and press it in until it is seated.

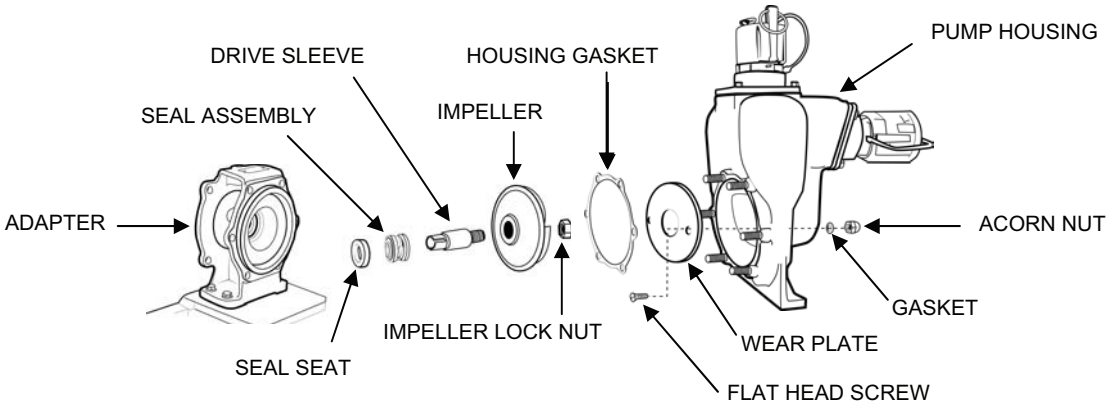

Figure 9. P7/P8 Pump Assembly.

4. Install the adapter and pump onto the diesel engine (P-8) or the electric motor (P-7) as follows (see Figure 10):
    a. Polish the engine/motor drive shaft with a fine abrasive cloth to remove any rust or corrosion.
    b. Attach the adapter to the engine (P-8) using the four cap screws, four lock washers, and four flat washers or attach the adapter to the motor (P-7) using the four cap screws and four lock washers.
    c. Lubricate the engine/motor drive shaft and the inside diameter of the new drive sleeve with corrosion preventive compound.
    d. Slide the new impeller and drive sleeve assembly onto the drive shaft.
    e. Install the coupling clamp assembly but do not tighten it.
    f. Place a new housing gasket between the adapter and the pump housing.
    g. Fit the pump onto the adapter and thread a nut on two opposing threaded studs to secure the pump to the adapter. Tighten the two nuts.

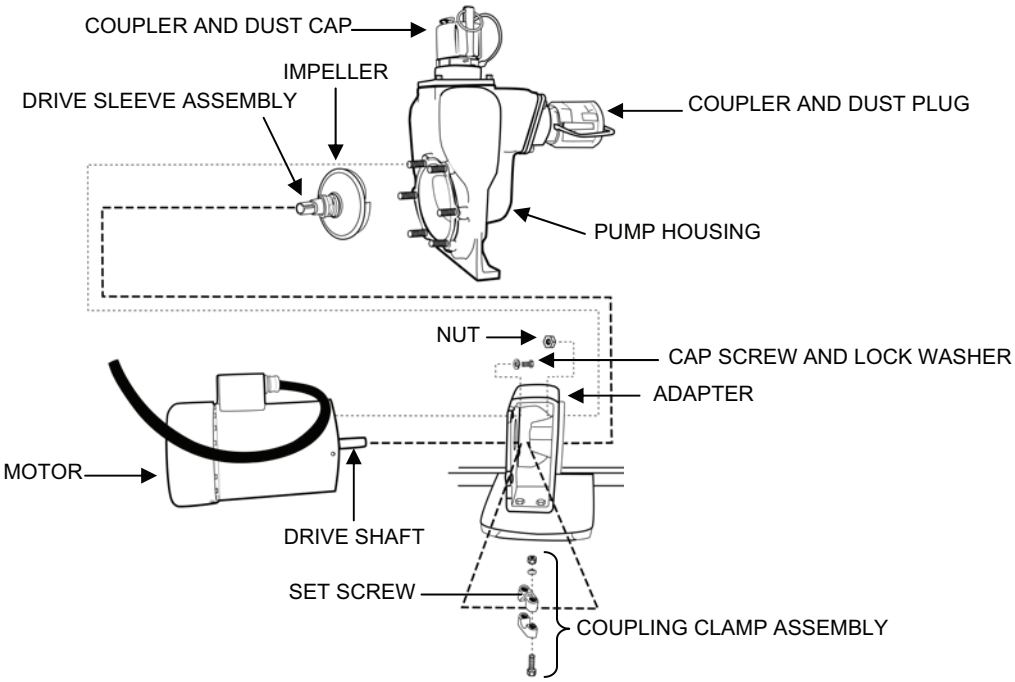

Figure 10. Pump P-7 Adapter and Pump Installation.

5. Set the gap between the impeller and the pump wear plate as follows (see Figure 11):
    a. Remove the four cap screws and four lock washers that secure the outlet flange to the pump housing.
    b. Carefully remove the pump flange to avoid damaging the gasket between the flange and the pump housing.
    c. If the gasket is damaged, replace it.
    d. Look through the outlet into the pump. Turn the impeller drive sleeve and impeller by hand until you see the impeller near the wear plate.
    e. Insert a 0.015 – inch feeler gauge between the impeller and wear plate. Move the impeller forward or backward as needed to provide a gap of 0.015 to 0.017-inch.
    f. Make sure the coupling clamp set screw, a drive sleeve slat, and the motor shaft keyway are aligned.
    g. Tighten the coupling clamp assembly to secure the impeller drive sleeve to the engine/motor drive shaft.
    h. Turn the drive shaft slowly to rotate the impeller and make sure that there is a minimum gap of 00.015-inch through the entire rotation of the impeller as follows:
        1) Turn the diesel engine (P-8) drive shaft by slowly pulling on the hand starter.
        2) Turn the electric motor (P-7) drive shaft by hand.
    i. Torque the coupling clamp nuts to 216 in.-lbs.
    j. Tighten the coupling clamp set screw into the drive shaft keyway.

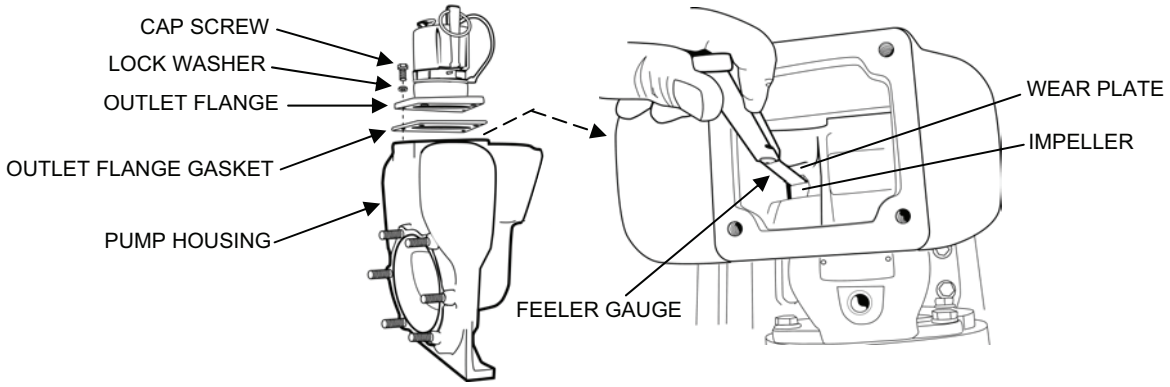

Figure 11. Pump Impeller Clearance Adjustment.

6. Complete the installation as follows:
    a. Apply sealing compound to the threads of the remaining four threaded studs extending from the pump housing through the adapter (WP 0038, Table 1, item 40). Install the nuts onto the studs.
    b. Remove the two nuts initially installed onto opposing studs. Apply sealing compound to the stud threads and reinstall the nuts (WP 0038, Table 1, item 40).
    c. Reinstall the pump outlet flange and gasket.
7. Connect the motor cable to the proper receptacle on the junction box.
8. Place the pump back into service and check it for leaks and proper operation.

Inlet Flapper or Outlet Flange Gasket Replacement

Replace the inlet flapper assembly on the P-7 or P-8 pump as follows (see Figure 12):

1. Remove the four cap screws and four lock washers that attach the inlet flange to the pump housing.
2. Remove the inlet flange and the flapper assembly.
3. Clean the flange and pump housing surfaces that come in contact with the flapper assembly.
4. Install the new flapper assembly, making sure the flapper opens into the pump housing.
5. Reattach the inlet flange using the four cap screws and four lock washers.

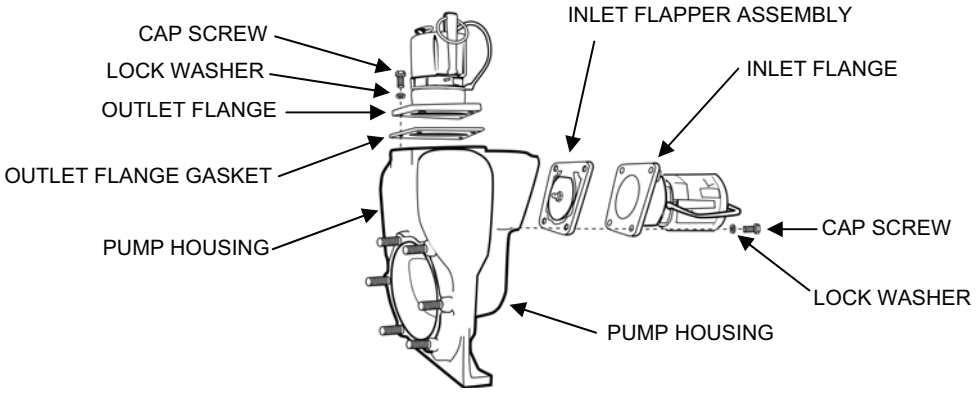

Figure 12. P-7/P8 Pump Inlet Flange Flapper Assembly and Outlet Flange Gasket Replacement.

Replace the outlet flange gasket on the P-7 or P-8 pump as follows (see Figure 12):

1. Remove the four cap screws and four lock washers that attach the outlet flange to the pump housing.
2. Remove the outlet flange and gasket.
3. Clean the flange and pump housing surfaces that come in contact with the gasket.
4. Install the new gasket.
5. Reattach the outlet flange using the four cap screws and four lock washers.
6. Place the pump back into service and inspect it for proper rotation and leaks.

END OF WORK PACKAGE

TACTICAL WATER PURIFICATION SYSTEM (TWPS) FIELD MAINTENANCE PROCEDURES OPERATING CONTROL SYSTEM TOP PANEL

0020 00

THIS SECTION COVERS:
Replace

INITIAL SETUP:

Maintenance Level
Field
Tools
Army: General Mechanic's Tool Kit (WP 0037)
Marine Corps: Common No. 1 Tool Set (WP 0037)
References:
Refer to TM 10-4610-309-23P for repair parts information
Personnel Required
One
Equipment Condition
Army TWPS: Generator off and TWPS main breaker off
Marine Corps TWPS: TWPS disconnected from power source

GENERAL:

This work package contains information and instructions for replacing components on the operating control panel top panel of the TWPS. The procedures covered in this work package include:

- Light Bulb Replacement
- Pilot Light Replacement
- Hour Meter Replacement
- Digital Display Replacement
- Rotary Switch Replacement
- Illuminated Push Button Replacement
- Push Button Replacement
- Selector Switch Replacement
- Emergency Stop Push Button Replacement
- Alarm Horn Replacement
- 10-Turn Potentiometer Replacement
- 1000 Ohm Potentiometer Replacement
- Computer Cable Assembly Replacement

REMOVE
In order to replace the components on the OCP (operator control panel), with the exception of light bulb replacement, it is necessary to open the control panel and remove the protective box covering the components at the back of the panel. Remove the protective box as follows:

WARNING

Electrical hazard. Army personnel: make sure that the generator is off and the TWPS main breaker is off before opening the control panel. Marine Corps personnel: make sure that the TWPS is disconnected from its power source before opening the control panel. Failure to observe this warning could result in serious injury or death from electrical shock.

1. Open the cover to the OCP (see Figure 1).
2. Remove the 14 screws that secure the OCP and swing the instrument panel open.

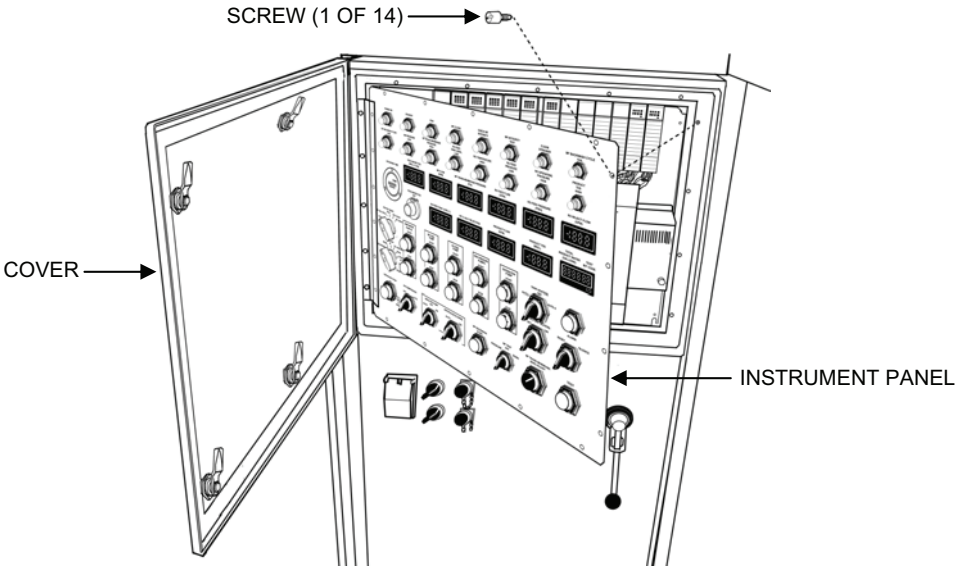

Figure 1. Opening the OCP Instrument Panel.

3. Remove the 24 nuts that secure the protective box to the back of the OCP instrument panel and lift the box off (see Figure 2).

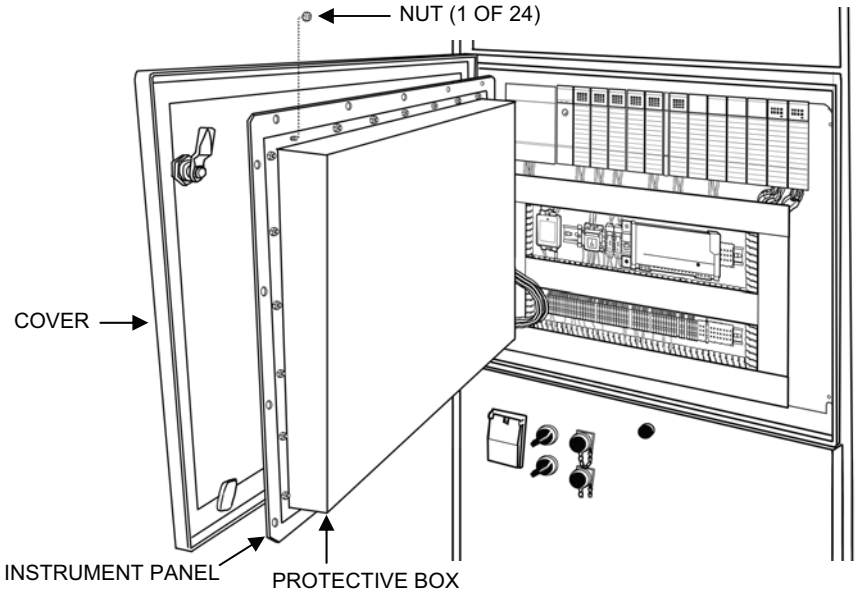

Figure 2. Box Removal from the Back of the OCP Instrument Panel.

REPLACE

Light Bulb Replacement:

Parts (TM 10-4610-309-23P):
- Light bulb, green
- Light bulb, red
- Light bulb, amber

Equipment Condition:
- Army TWPS: Generator off and TWPS main breaker off
- Marine Corps TWPS: TWPS disconnected from power source

Replace a light bulb on the operating control panel top panel as follows:

WARNING

Electrical hazard. Army personnel: make sure that the generator is off and the TWPS main breaker is off before working on the control panel. Marine Corps personnel: make sure that the TWPS is disconnected from its power source before working on the control panel. Failure to observe this warning could result in serious injury or death from electrical shock.

NOTE

Make sure to obtain the correct color and type of light bulb before replacing the bulb.

1. Remove a light bulb from pilot light, emergency stop push button or selector switch as follows (see Figure 3):
   a. Open the OCP top panel; locate the light bulb to be replaced.
   b. Turn lens, push button knob or switch knob counterclockwise and remove.
   c. Push light bulb inward, turn counterclockwise and remove.

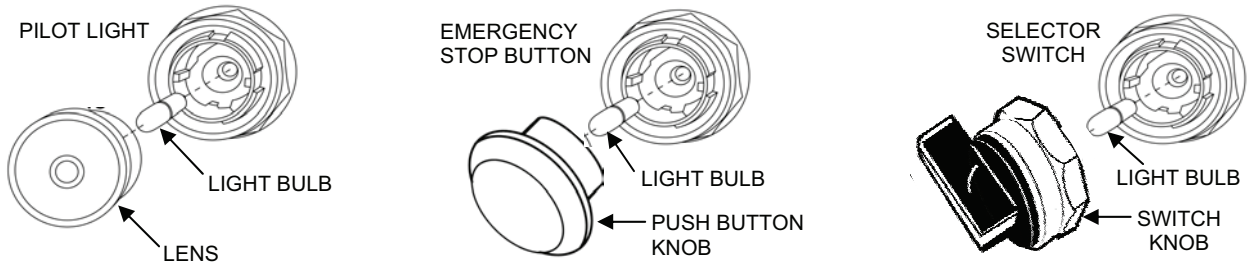

Figure 3. Light Bulb Replacement

2. Install a new light bulb as follows:
   a. Insert the new light bulb in its socket and turn clockwise
   b. Inspect lens for cracks and damage or missing seal. Replace if necessary.
   c. Insert the lens, button knob or switch knob in its socket over the light bulb and turn clockwise until secured.

Pilot Light Replacement:

Parts (TM 10-4610-309-23P):
- Pilot light, green
- Pilot light, red
- Pilot light, amber
- EMI gasket

Equipment Condition:
- Army TWPS: Generator off and TWPS main breaker off
- Marine Corps TWPS: TWPS disconnected from power source

Replace a pilot light on the operating control panel top panel as follows:

WARNING

Electrical hazard. Army personnel: make sure that the generator is off and the TWPS main breaker is off before working on the control panel. Marine Corps personnel: make sure that the TWPS is disconnected from its power source before working on the control panel. Failure to observe this warning could result in serious injury or death from electrical shock.

NOTE

Make sure to obtain the correct color pilot light before replacing the light.

1. Remove a pilot light as follows (see Figure 4):
   a. Open the OCP top panel, remove the protective box, locate the pilot light to be replaced.
   b. Tag the wires attached to the pilot light.
   c. Loosen the screw connections and remove the connecting wires.
   d. Remove the ring nut, locking washer, sealing washer and EMI gasket.
   e. Remove the pilot light from the control panel.

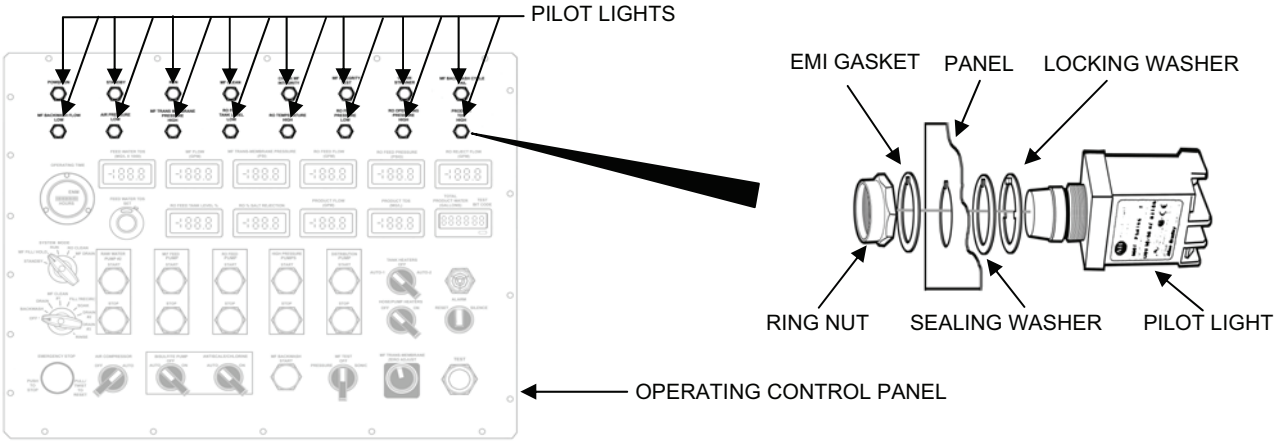

Figure 4. Pilot Light Assembly Removal.

2. Install a new pilot light as follows:
    a. Position the new pilot light, ring nut, locking washer; sealing washer and EMI gasket in the panel.
    b. Tighten the ring nut to secure the pilot light.
    c. Attach the wires to the screw connections in accordance to the wire tags.
    d. Tighten the screw connections to secure the wires.
    e. Remove the wire tags if necessary.
    f. Reinstall the protective box, close and secure the operating control panel top panel.

Hour Meter Replacement:

Parts (TM 10-4610-309-23P):
Hour meter
EMI gasket
Equipment Condition:
Army TWPS: Generator off and TWPS main breaker off
Marine Corps TWPS: TWPS disconnected from power source

Replace the hour meter on the operating control panel top panel as follows:

WARNING

Electrical hazard. Army personnel: make sure that the generator is off and the TWPS main breaker is off before working on the control panel. Marine Corps personnel: make sure that the TWPS is disconnected from its power source before working on the control panel. Failure to observe this warning could result in serious injury or death from electrical shock.

1. Remove the hour meter as follows (see Figure 5):
    a. Open the OCP top panel, remove the protective box and locate the hour meter.
    b. Tag the wires attached to the hour meter.
    c. Carefully pull the female connector wires from the hour meter blade terminals.
    d. Remove the three screws, washers, lock washers, and nuts that secure the hour meter to the panel and retain for reassembly.
    e. Remove the hour meter and EMI gasket from the control panel.

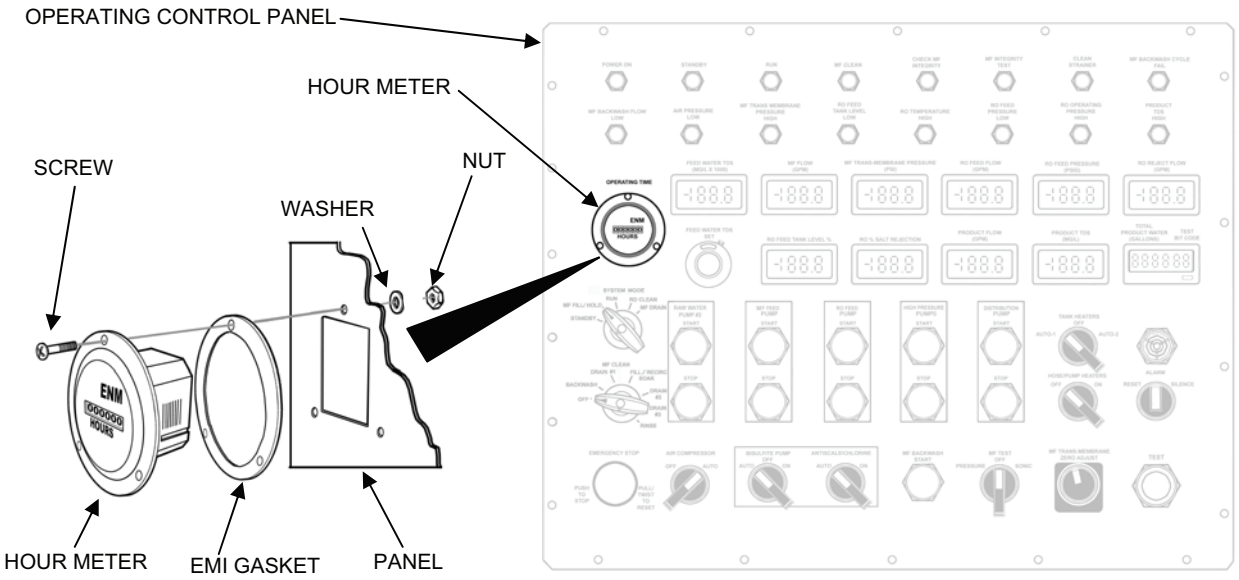

Figure 5. Hour Meter Assembly Replacement .

2. Install the new hour meter as follows:
    a. Position the new hour meter and EMI gasket in the panel.
    b. Secure the new hour meter to the panel using the three screws, washers, lock washer and nuts.
    c. Connect the connector wires to the blade terminals in accordance to the wire tags.
    d. Remove the wire tags if necessary.
    e. Reinstall the protective box, close and secure the operating control panel top panel.

Digital Display Replacement:

Parts (TM 10-4610-309-23P)
Digital display
Digital display with reset
EMI gasket
Equipment Condition:
Army TWPS: Generator off and TWPS main breaker off
Marine Corps TWPS: TWPS disconnected from power source

Replace a digital display (current condition digital display) on the operating control panel top panel as follows:

WARNING

Electrical hazard. Army personnel: make sure that the generator is off and the TWPS main breaker is off before working on the control panel. Marine Corps personnel: make sure that the TWPS is disconnected from its power source before working on the control panel. Failure to observe this warning could result in serious injury or death from electrical shock.

NOTE
Make sure to obtain the correct type of display before replacing the display.

1. Remove a digital display as follows (see Figure 6):
   a. Open the OCP top panel, remove the protective box and locate the digital display to be replaced.
   b. Tag the wires attached to the digital display.
   c. Loosen the screw connections and remove the connecting wires.
   d. Remove the two mounting screws and nut fasteners at the rear of the digital display and remove the mounting clip.
   e. Remove the bezel from the rear of the digital display.
   f. Remove the digital display and EMI gasket from the control panel.

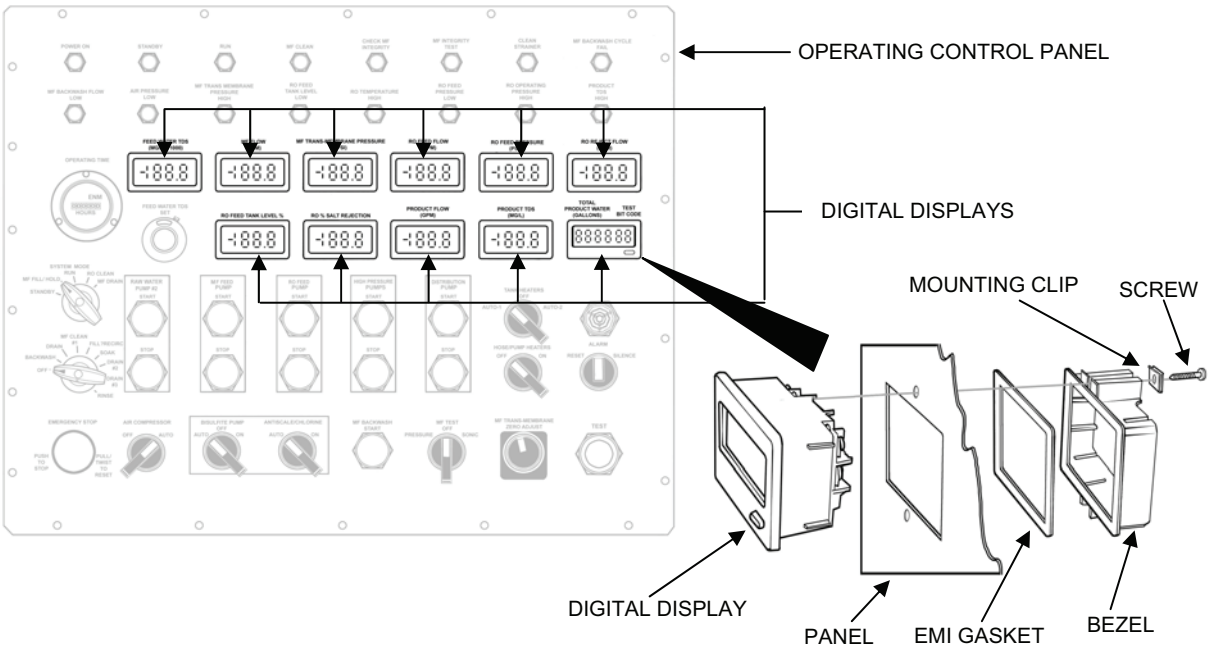

Figure 6. Digital Display Replacement.

2. Configure new digital display as follows:
   a. To set the digital display to the required 19.99mA current range, position the jumper over the top two pins on the second male header strip as indicated in Figure 7.

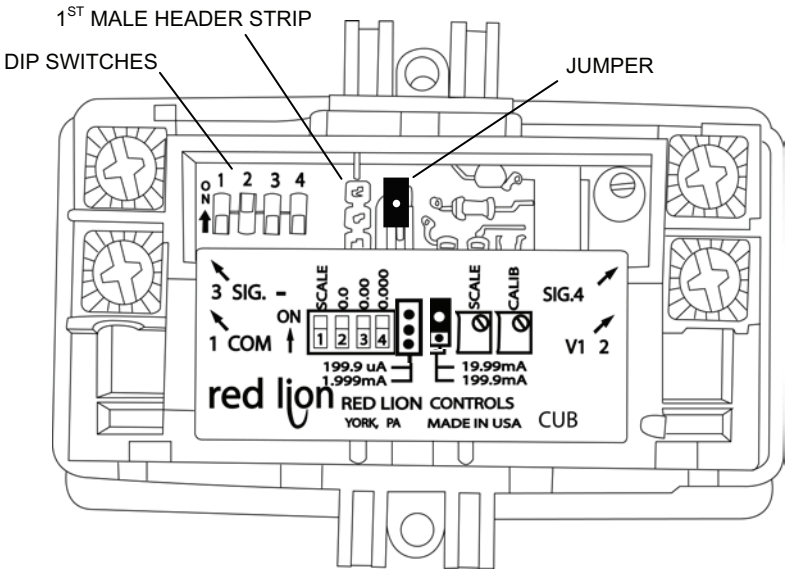

Figure 7.Digital Display Settings

   b. To display the proper decimal place, set dip switches 1 thru 4 in accordance with the associated display name labeled on the panel as called out in Table 1.

Table 1. Dip Switch Settings.

Display Name	Dip Switch			
	1	2	3	4
Feed Water TDS	OFF	ON	OFF	OFF
MF Flow	OFF	OFF	OFF	OFF
MF TMP	OFF	ON	OFF	OFF
RO Feed Flow	OFF	ON	OFF	OFF
RO Feed Pressure	OFF	OFF	OFF	OFF
RO Reject Flow	OFF	ON	OFF	OFF
RO Tank Level	OFF	ON	OFF	OFF
% Salt Rejection	OFF	ON	OFF	OFF
Product Flow	OFF	ON	OFF	OFF
Product TDS	OFF	OFF	OFF	OFF
Total Product Water	No Settings Required			

3. Install a new digital display as follows:
    a. Slide the nut fastener into the slot on the mounting clip and then insert the mounting screw through the nut on both sides of the mounting clip. The tip of the mounting screw should not project through the hole on clip.
    b. Slide the panel gasket over the rear of the new digital display to the back of the bezel.
    c. Position the digital display in the panel.
    d. Slide the mounting clip over the rear of the digital display until the clip is against the back of the panel.
    e. Hold the digital display in place while alternately tightening the two mounting screws to ensure uniform gasket pressure.
    f. Attach the wires to the screw connections in accordance to the wire tags.
    g. Tighten the screw connections to secure the wires.
    h. Remove the wire tags if necessary.
    i. Reinstall the protective box, close and secure the operating control panel top panel.

Rotary Switch Replacement:

Parts (TM 10-4610-309-23P):
Rotary switch
Switch knob
Equipment Conduction:
Army TWPS: Generator off and TWPS main breaker off
Marine Corps TWPS: TWPS disconnected from power source

Replace a rotary switch on the operating control panel top panel as follows:

WARNING

Electrical hazard. Army personnel: make sure that the generator is off and the TWPS main breaker is off before working on the control panel. Marine Corps personnel: make sure that the TWPS is disconnected from its power source before working on the control panel. Failure to observe this warning could result in serious injury or death from electrical shock.

1. Remove a rotary switch as follows (see Figure 8):
    a. Open the OCP top panel, remove the protective box and locate the rotary switch to be replaced.
    b. Tag the wires attached to the rotary switch.
    c. Loosen the screw connections and remove the connecting wires.
    d. Remove the switch knob.
    e. Remove mini screw from shaft attachment; slide attachment off rotary switch shaft.
    f. Remove the ring nut that secures the rotary switch to the panel.
    g. Remove the rotary switch from the control panel.

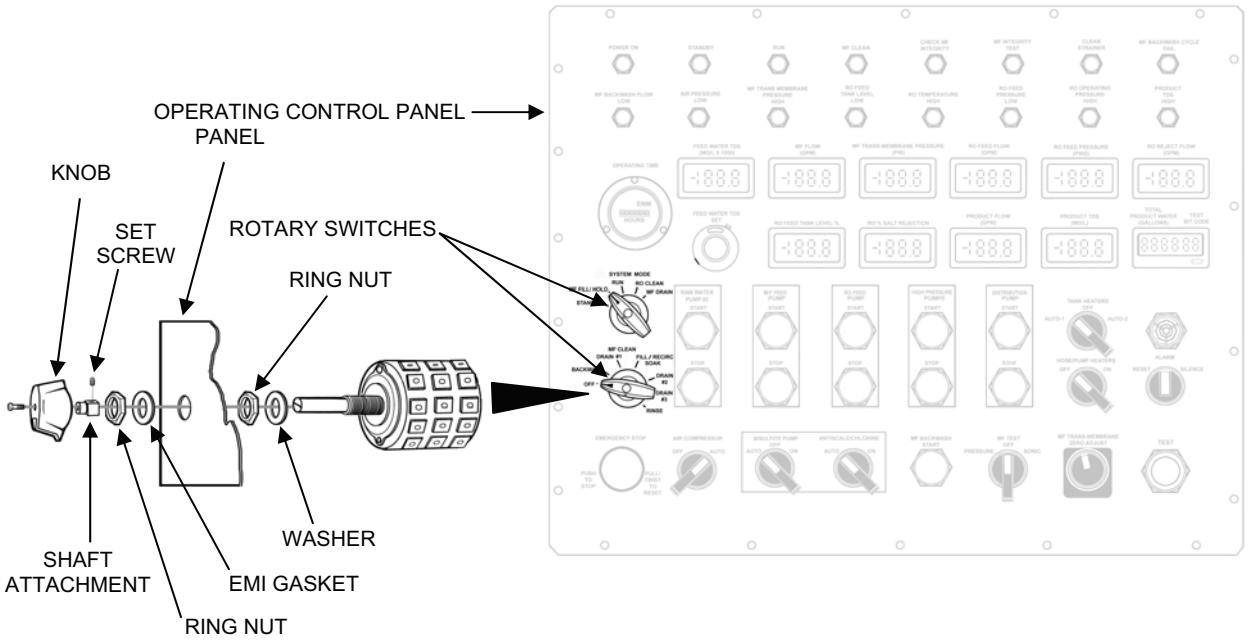

Figure 8. Rotary Switch Assembly Replacement.

2. Install a new rotary switch as follows:
    a. Position the new rotary switch in the panel with washer and back ring nut.
    b. Position the EMI gasket through the shaft to the panel.
    c. Tighten the front ring nut to secure the rotary switch to the panel.
    d. Slide the shaft attachment on the shaft and secure with mini screw.
    e. Install the new switch knob.
    f. Make any adjustments to knob and rotary switch to align with selections on panel.
    g. Attach the wires to the screw connections in accordance to the wire tags.
    h. Tighten the screw connections to secure the wires.
    i. Remove the wire tags if necessary.
    j. Reinstall the protective box, close and secure the operating control panel top panel.

Push Button Replacement:

Parts (TM 10-4610-309-23P):
Push Button, illuminated, red
Push Button, illuminated, green
Gray Push Button
EMI gasket
Equipment Condition:
Army TWPS: Generator off and TWPS main breaker off
Marine Corps TWPS: TWPS disconnected from power source

Replace a push button on the operating control panel top panel as follows:

WARNING

Electrical hazard. Army personnel: make sure that the generator is off and the TWPS main breaker is off before working on the control panel. Marine Corps personnel: make sure that the TWPS is disconnected from its power source before working on the control panel. Failure to observe this warning could result in serious injury or death from electrical shock.

NOTE

Make sure to obtain the correct color illuminated push button before replacing a push button.

1. Remove a push button as follows (see Figure 9):
   a. Open the OCP top panel, remove the protective box and locate the push button to be replaced.
   b. Tag the wires attached to the push button.
   c. Loosen the screw connections and remove the connecting wires.
   d. Remove the ring nut that secures the push button to the panel.
   e. Remove the push button, sealing washer, rubber washer, locking washer and EMI gasket from the control panel.

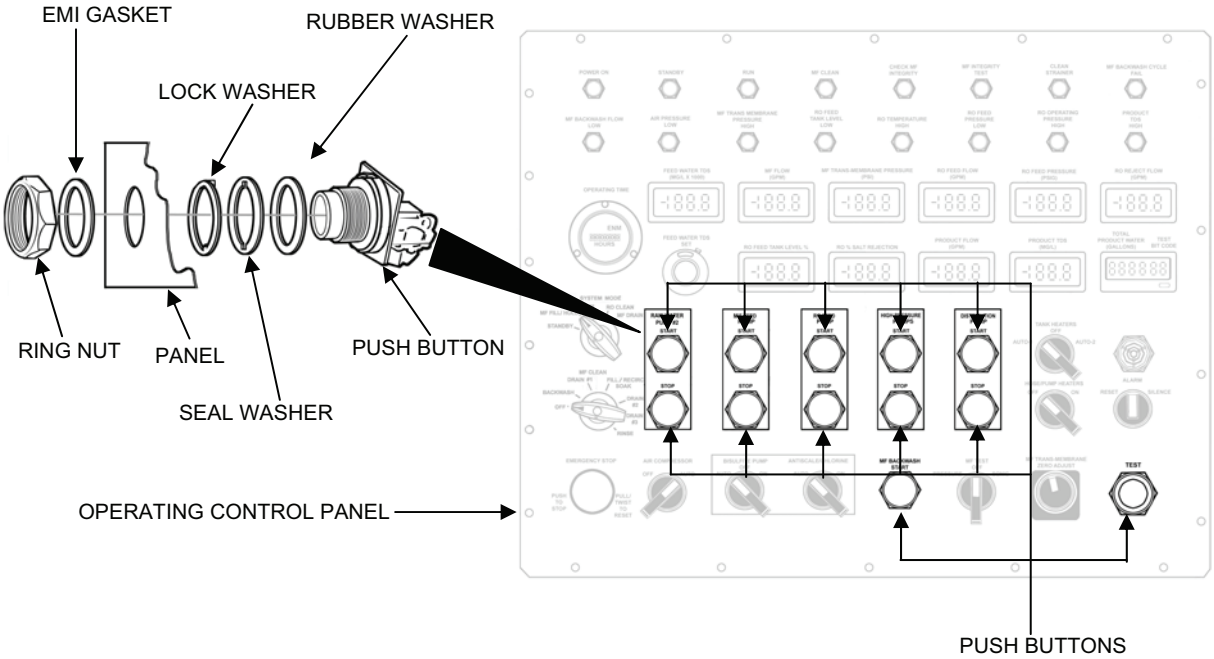

Figure 9. Push Button Replacement.

2. Install a new push button as follows:
    a. Position the new push button, rubber washer, locking washer, sealing washer and EMI gasket in the panel.
    b. Tighten the ring nut to secure the push button switch to the panel.
    c. Attach the wires to the screw connections in accordance to the wire tags.
    d. Tighten the screw connections to secure the wires.
    e. Remove the wire tags if necessary.
    f. Reinstall the protective box, close and secure the operating control panel top panel.

Selector Switch Replacement:

Parts (TM 10-4610-309-23P):
Selector Switch, 3 position
Selector Switch, 2 position
Selector Switch, 2 position, spring return
EMI gasket
Equipment Condition:
Army TWPS: Generator off and TWPS main breaker off
Marine Corps TWPS: TWPS disconnected from power source

Replace a selector switch on the operating control panel top panel as follows:

WARNING

Electrical hazard. Army personnel: make sure that the generator is off and the TWPS main breaker is off before working on the control panel. Marine Corps personnel: make sure that the TWPS is disconnected from its power source before working on the control panel. Failure to observe this warning could result in serious injury or death from electrical shock.

NOTE

Make sure to obtain the correct type selector switch before replacing the switch.

1. Remove a selector switch as follows (see Figure 10):
    a. Open the OCP top panel, remove the protective box and locate the selector switch to be replaced.
    b. Tag the wires attached to the selector switch.
    c. Loosen the screw connections and remove the connecting wires.
    d. Remove the knob with the ring nut that secures the selector switch to the panel.
    e. Remove the selector switch, rubber washer, locking washer, sealing washer and EMI gasket from the control panel.

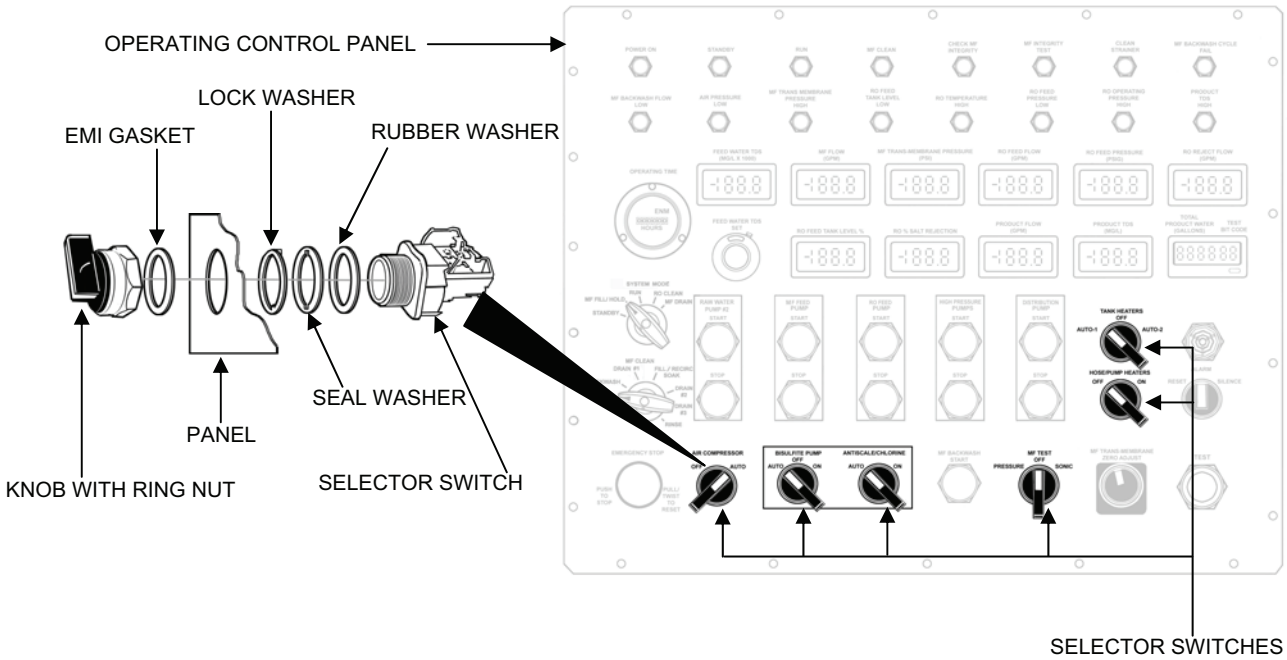

Figure 10. Selector Switch Replacement.

2. Install a new selector switch as follows:
   a. Position the new selector switch, rubber washer, locking washer, sealing washer and EMI gasket in the panel.
   b. Secure the selector switch to the panel using the ring nut with the knob.
   c. Attach the wires to the screw connections in accordance to the wire tags.
   d. Tighten the screw connections to secure the wires.
   e. Remove the wire tags if necessary.
   f. Reinstall the protective box, close and secure the operating control panel top panel.

Emergency Stop Push Button Replacement:

Parts (TM 10-4610-309-23P):
Push Button, Emergency Stop
EMI gasket
Equipment Condition:
Army TWPS: Generator off and TWPS main breaker off
Marine Corps TWPS: TWPS disconnected from power source

Replace the emergency stop push button on the operating control panel top panel as follows:

WARNING

Electrical hazard. Army personnel: make sure that the generator is off and the TWPS main breaker is off before working on the control panel. Marine Corps personnel: make sure that the TWPS is disconnected from its power source before working on the control panel. Failure to observe this warning could result in serious injury or death from electrical shock.

1. Remove the emergency stop push button as follows (see Figure 11):
   a. Open the OCP top panel, remove the protective box and locate the emergency stop push button.
   b. Tag the wires attached to the push button.
   c. Loosen the screw connections and remove the connecting wires.
   d. Remove the plastic mushroom cap from the front of the panel.
   e. Remove the ring nut that secures the push button to the panel.
   f. Remove the push button, rubber washers, locking washer, seal washer and EMI gasket from the control panel.

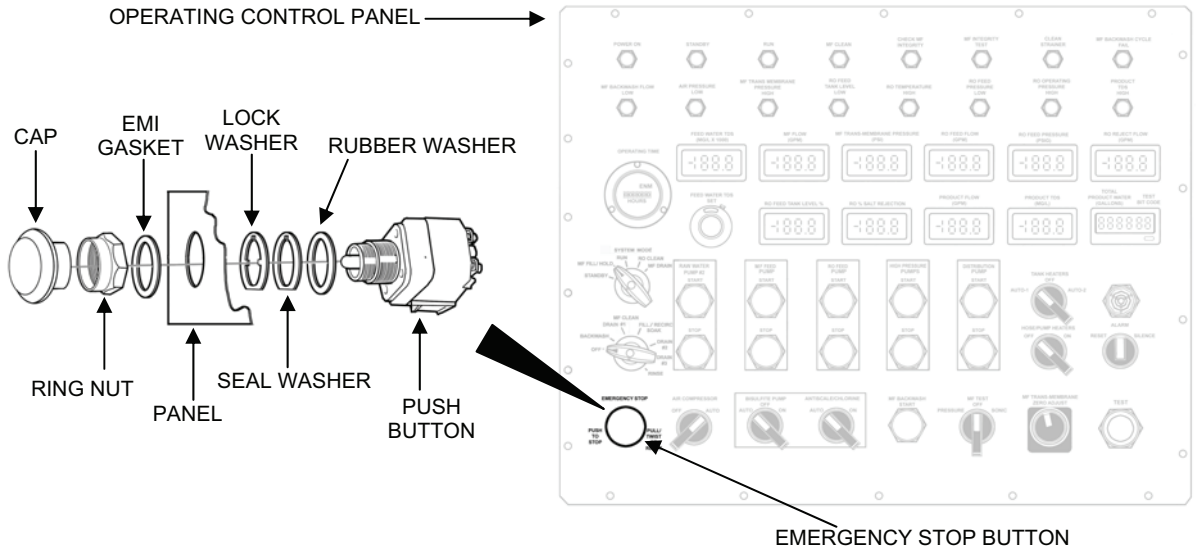

Figure 11. Emergency Stop Button Replacement.

2. Install the new emergency stop push button as follows:
   a. Position the new push button, rubber washers, locking washer and EMI gasket in the panel.
   b. Tighten the ring nut to secure the push button switch to the panel.
   c. Attach the plastic mushroom cap to the front of the switch.
   d. Attach the wires to the screw connections in accordance to the wire tags.
   e. Tighten the screw connections to secure the wires.
   f. Remove the wire tags if necessary.
   g. Reinstall the protective box, close and secure the operating control panel top panel.

Alarm Horn Replacement:

Parts:
Alarm Horn (TM 10-4610-309-23P)
Equipment Condition:
Army TWPS: Generator off and TWPS main breaker off
Marine Corps TWPS: TWPS disconnected from power source

Replace the alarm horn on the operating control panel top panel as follows:

WARNING

Electrical hazard. Army personnel: make sure that the generator is off and the TWPS main breaker is off before working on the control panel. Marine Corps personnel: make sure that the TWPS is disconnected from its power source before working on the control panel. Failure to observe this warning could result in serious injury or death from electrical shock.

1. Remove the alarm horn as follows (see Figure 12):
   a. Open the OCP top panel, remove the protective box and locate the alarm horn.
   b. Tag the wires attached to the alarm horn.
   c. Loosen the screw connections and remove the connecting wires.
   d. Remove the plastic ring nut from the front of the alarm horn.
   e. Remove the alarm horn from the control panel.

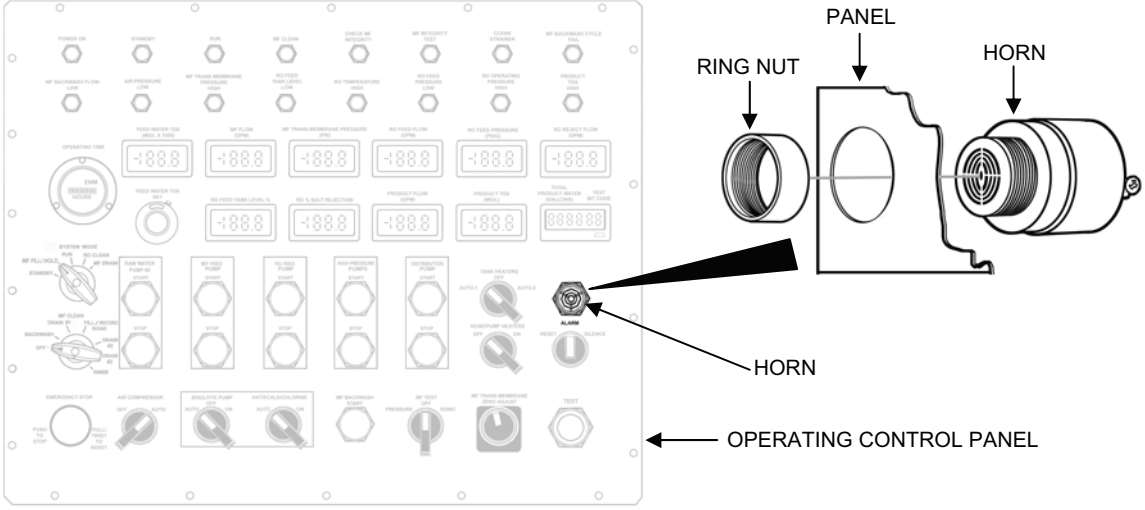

Figure 12. Alarm Horn Assembly Replacement.

2. Install the new alarm horn as follows:
    a. Position the alarm horn in the panel.
    b. Install and tighten the new plastic ring nut to secure the alarm horn to the panel. Do not over-tighten.
    c. Attach the wires to the screw connections in accordance to the wire tags.
    d. Tighten the screw connections to secure the wires.
    e. Remove the wire tags if necessary.
    f. Reinstall the protective box, close and secure the operating control panel top panel.

10-Turn Potentiometer Replacement:

Parts (TM 10-4610-309-23P):
Potentiometer, 10-turn, precision
Counting Dial
Material:
Soldering iron
Solder
Equipment Condition:
Army TWPS: Generator off and TWPS main breaker off
Marine Corps TWPS: TWPS disconnected from power source

Replace the precision 10-turn potentiometer on the operating control panel top panel as follows:

WARNING

Electrical hazard. Army personnel: make sure that the generator is off and the TWPS main breaker is off before working on the control panel. Marine Corps personnel: make sure that the TWPS is disconnected from its power source before working on the control panel. Failure to observe this warning could result in serious injury or death from electrical shock.

1. Remove the potentiometer as follows (see Figure 13):
    a. Open the OCP top panel, remove the protective box and locate the 10-turn potentiometer.
    b. Tag the wires attached to the potentiometer.
    c. Unsolder the wires from the solder lugs and remove the connecting wires.
    d. Loosen the setscrew in the knob of the counting dial.
    e. Remove the dial by gently pulling the dial while turning it clockwise.
    f. Remove the ring nut that secures the potentiometer to the panel.
    g. Remove the lock washer and key washer from the shaft.
    h. Remove the potentiometer from the control panel.

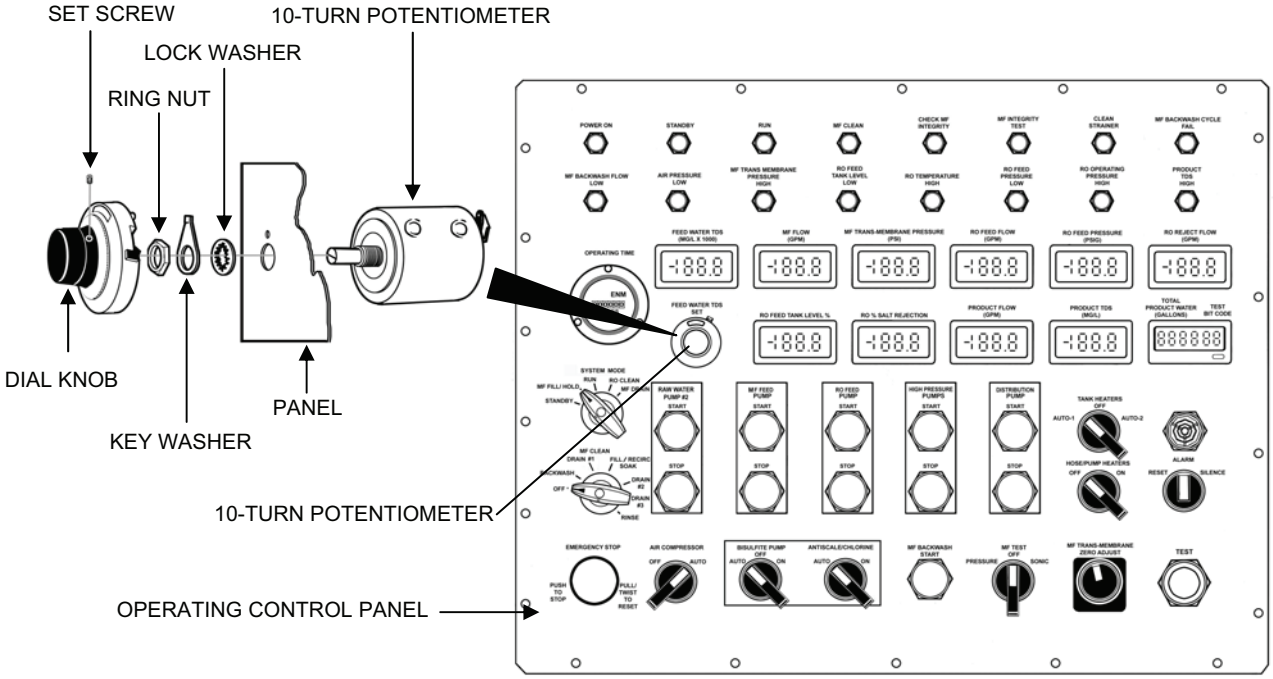

Figure 13. 10-Turn Potentiometer Assembly Replacement.

2. Install the new 10-turn potentiometer as follows:
   a. Position the potentiometer in the panel.
   b. Position the lock washer and key washer on the shaft.
   c. Install and tighten the ring nut to secure the potentiometer to the panel.
   d. Turn the potentiometer shaft counterclockwise to obtain minimum resistance or voltage ratio.
   e. Loosen the setscrew in the knob of the new counting dial.
   f. Set the counting dial to a “0.0” reading.
   g. While holding the outer ring of the dial, position the dial against panel.
   h. Tighten the knob set screw to secure it to the potentiometer shaft.
   i. Solder the wires to the solder lug connections in accordance to the wire tags.
   j. Remove the wire tags if necessary.
   k. Reinstall the protective box, close and secure the operating control panel top panel.

1000 Ohm Potentiometer Replacement:

Parts (TM 10-4610-309-23P):
Potentiometer, 1000 Ohm
EMI Gasket
Equipment Condition:
Army TWPS: Generator off and TWPS main breaker off
Marine Corps TWPS: TWPS disconnected from power source

Replace the MF trans-membrane potentiometer on the operating control panel top panel as follows:

WARNING

Electrical hazard. Army personnel: make sure that the generator is off and the TWPS main breaker is off before working on the control panel. Marine Corps personnel: make sure that the TWPS is disconnected from its power source before working on the control panel. Failure to observe this warning could result in serious injury or death from electrical shock.

a. Remove the 1000 ohm potentiometer as follows (see Figure 14):
   a. Open the OCP top panel, remove the protective box and locate the 1000 ohm potentiometer.
   b. Tag the wires attached to the potentiometer.
   c. Loosen the screw connections and remove the connecting wires.
   d. Remove the ring nut that secures the potentiometer to the panel.
   e. Remove dial plate and EMI gasket from the front of the panel.
   f. Remove the potentiometer with dial nut, rubber washer, key washer, and locking washer from the back of the control panel.

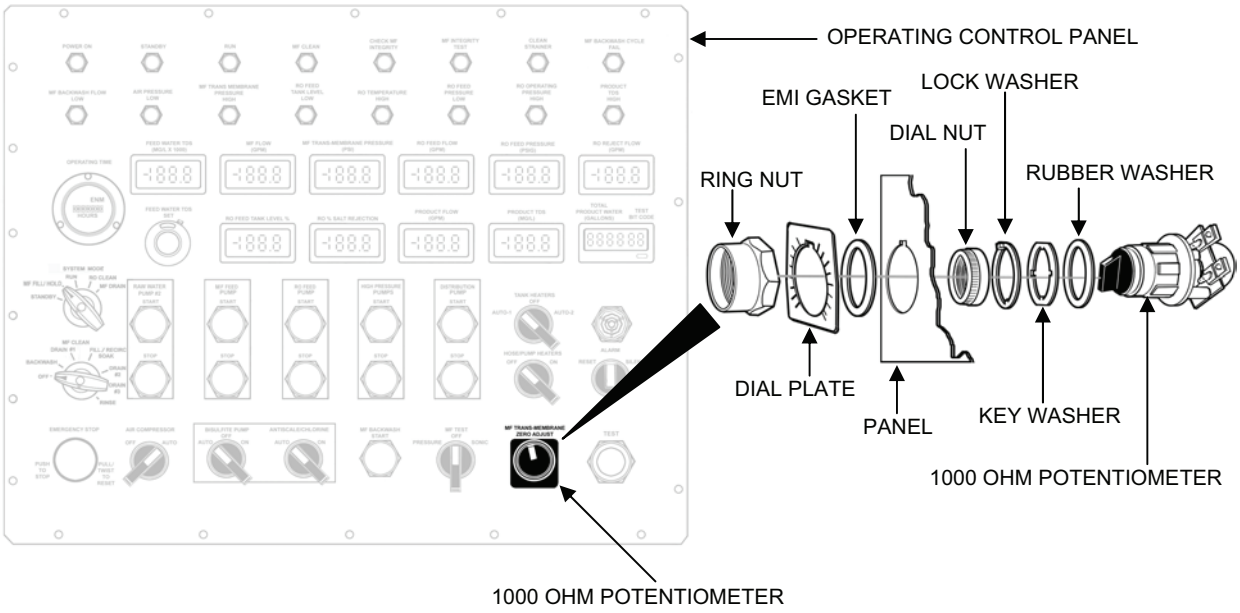

Figure 14. 1000 Ohm Potentiometer Assembly Replacement.

b. Install the new 1000 ohm potentiometer as follows:
   a. Position the rubber washer, locking washer and key washer with the dial nut on the new potentiometer.
   b. Insert the potentiometer through the back of the panel.
   c. Position the EMI gasket and dial plate on potentiometer.
   d. Secure the potentiometer to the panel using the ring nut
   e. Attach the wires to the screw connections in accordance to the wire tags.
   f. Tighten the screw connections to secure the wires.
   g. Remove the wire tags if necessary.
   h. Reinstall the protective box, close and secure the operating control panel top panel.

Computer Cable Assembly Replacement:

Parts (TM 10-4610-309-23P):
OCP Computer Serial Port Cable Assembly
OCP Computer Program Port Cable Assembly
Gasket
Equipment Condition:
Army TWPS: Generator off and TWPS main breaker off
Marine Corps TWPS: TWPS disconnected from power source

Replacing the computer cable assembly as follows:

WARNING

Electrical hazard. Army personnel: make sure that the generator is off and the TWPS main breaker is off before working on the control panel. Marine Corps personnel: make sure that the TWPS is disconnected from its power source before working on the control panel. Failure to observe this warning could result in serious injury or death from electrical shock.

NOTE
Make sure to obtain the correct type of cable before replacing push button.

1. Remove computer cable as follows (see Figure 15):
   a. Locate the computer cable assembly on the outside of the OCP box.
   b. Remove the four screws washers and lock nuts securing the cable connector to the OCP box and retain for reassembly.
   c. Remove the dust cap and retain for reassembly.
   d. Open the OCP top panel to the sub panel.
   e. Open the processor module compartment door.
   f. Remove the wire duct covers below and left of the processor module.
   g. Disconnect the wiring harness of the cable assembly to be removed from the processor module.
   h. Carefully pull the cable assembly through the OCP box and remove the cable assembly.
   i. Remove gasket from OCP Box.

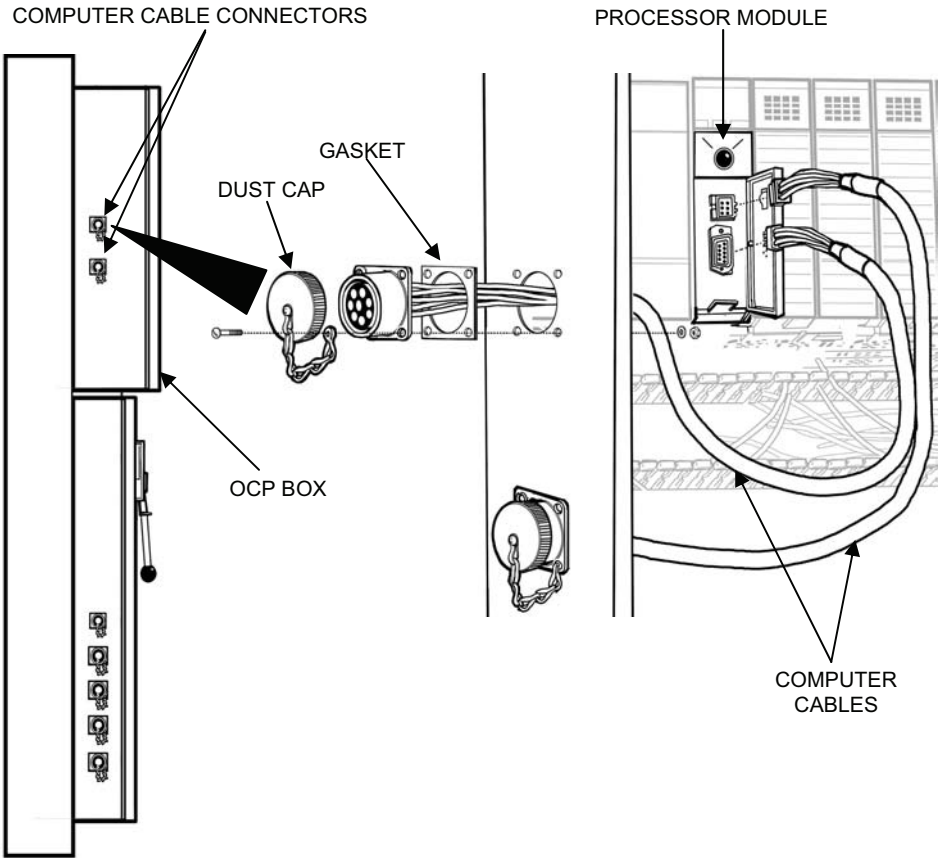

Figure 15. Computer Cable Assembly Replacement.

2. Install new computer cable assembly as follows:
    a. Position the new gasket through the harness end of the new cable assembly up to the connector end of the cable assembly.
    b. Insert the harness end of the cable assembly through the connector hole of the OCP box and feed up to the processor module.
    c. Align the gasket and the connector with screw holes on the OCP box.
    d. Position the end of dust cover chain on one of screw holes with the connector and gasket.
    e. Secure the connector, gasket and dust cover chain to the OCP box using the four screws, washers and lock nuts.
    f. Connect the harness end of the cable to the connector of the processor module.
    g. Close processor module compartment door.
    h. Replace wire duct covers.
    i. Close sub panel door
    j. Close OCP top panel.

END OF WORK PACKAGE

TACTICAL WATER PURIFICATION SYSTEM (TWPS) FIELD MAINTENANCE PROCEDURES OPERATING CONTROL SYSTEM SUB PANEL

0021 00

THIS SECTION COVERS:
Replace

INITIAL SETUP:

Maintenance Level
Field
Tools
Army: General Mechanic's Tool Kit (WP 0037)
Marine Corps: Common No. 1 Tool Set (WP 0037)
References:
Refer to TM 10-4610-309-23P for repair parts information
Personnel Required
One
Equipment Condition
Army TWPS: Generator off and TWPS main breaker off
Marine Corps TWPS: TWPS disconnected from power source

GENERAL:

This work package contains information and instructions for replacing components in the operating control panel sub-panel. The procedures covered in this work package include:

- 13-Slot Chassis Power Supply Replacement
- PLC Processor and Memory Module Replacement
- AC Input Module Replacement
- Relay Output Module Replacement
- Triac Output Module Replacement
- Analog Output Module Replacement
- Analog Input Module Replacement
- 13-Slot Chassis Replacement
- 3-Pole Relay Replacement
- Time Delay Relay Replacement
- Power Line Filter Replacement
- Electric Heater Replacement
- Solid State Relay Replacement
- Circuit Breaker Replacement
- Instrumentation Power Supply Replacement
- DC Terminal Replacement
- AC Terminal Replacement
- Ground Terminal Replacement

REPLACE

13-Slot Chassis Power Supply Replacement:

Parts:
Power Supply, 13-Slot Chassis (TM 10-4610-309-23P)
Equipment Condition:
Army TWPS: Generator off and TWPS main breaker off
Marine Corps TWPS: TWPS disconnected from power source

Replace the 13-slot chassis power supply on the operating control panel sub-panel as follows:

WARNING

Electrical hazard. Army personnel: make sure that the generator is off and the TWPS main breaker is off before working on the control panel. Marine Corps personnel: make sure that the TWPS is disconnected from its power source before working on the control panel. Failure to observe this warning could result in serious injury or death from electrical shock.

1. Open the cover to the OCP (see Figure 1).
2. Remove the 14 screws that secure the OCP and swing the instrument panel open.

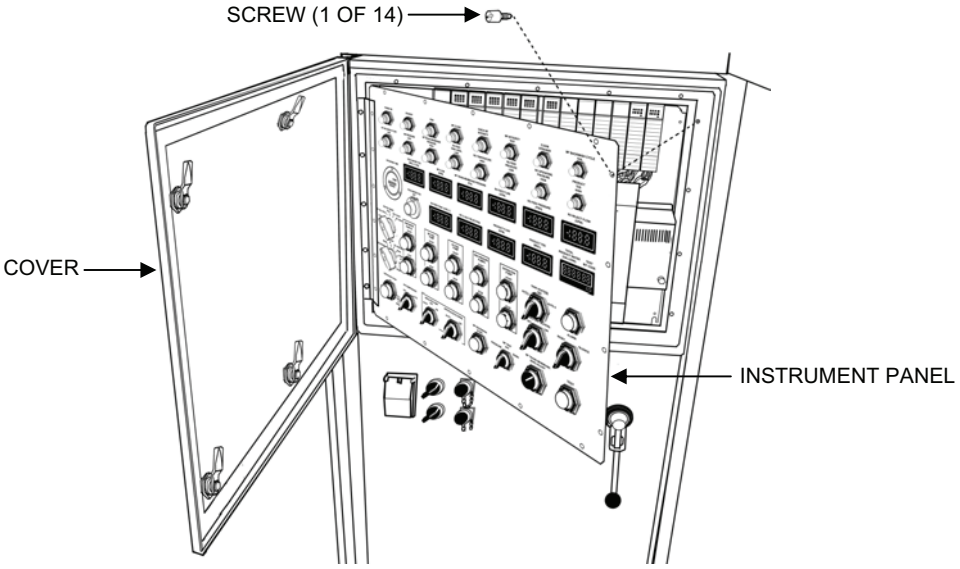

Figure 1. Opening the OCP Instrument Panel.

3. Remove the power supply as follows (see Figure 2):
    a. Locate the power supply mounted on the left side of the 13-slot chassis.
    b. Remove the wire duct cover below the 13-slot chassis.
    c. Open the compartment door of the power supply.
    d. Tag the wires connected to the power supply.
    e. Disconnect the wires connected to the power supply.
    f. Remove the two screws that secure the power supply to the 13-slot chassis and retain for reassembly.
    g. Remove the power supply from the 13-slot chassis.

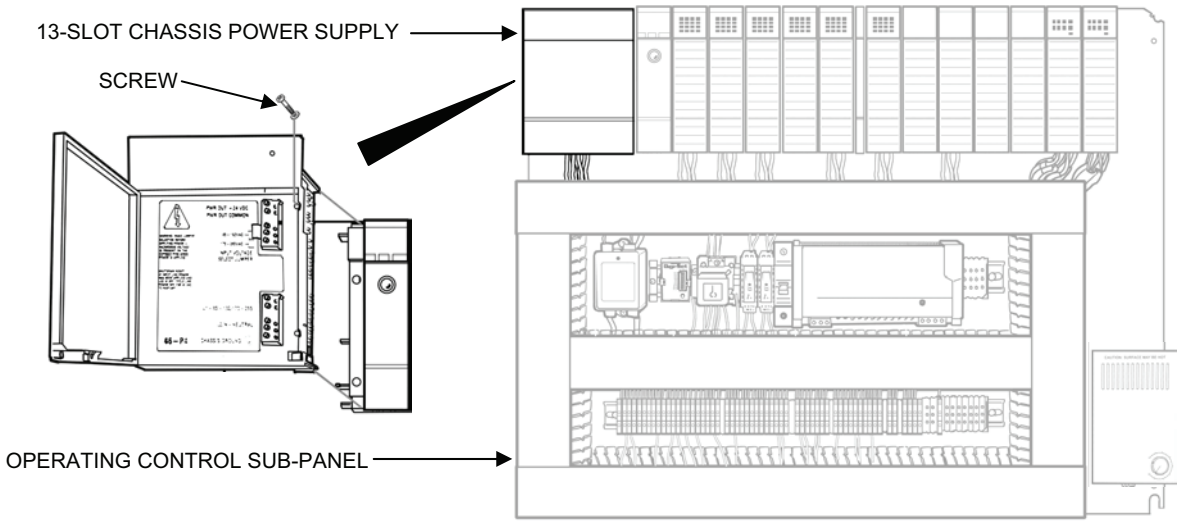

Figure 2. 13-Slot Chassis Power Supply Removal.

4. Install the new power supply as follows:
    a. Position the new power supply on the 13-slot chassis and press the power supply terminals into the 13-slot chassis slots.
    b. Secure the power supply to the chassis using the two screws.
    c. Connect the wires to the power supply in accordance with the wire tags.
    d. Remove the wire tags if necessary.
    e. Close the power supply compartment door.
    f. Reinstall the wire duct cover.
    g. Close and secure the OCP instrument panel using the 14 screws.

PLC Processor Module and Memory Module Replacement:

Parts:
PLC processor (TM 10-4610-309-23P)
Memory module (TM 10-4610-309-23P)
Equipment Condition:
Army TWPS: Generator off and TWPS main breaker off
Marine Corps TWPS: TWPS disconnected from power source

Replace the PLC processor module and/or the memory module inside the processor as follows:

WARNING

Electrical hazard. Army personnel: make sure that the generator is off and the TWPS main breaker is off before working on the control panel. Marine Corps personnel: make sure that the TWPS is disconnected from its power source before working on the control panel. Failure to observe this warning could result in serious injury or death from electrical shock.

1. Open the cover to the OCP (see Figure 1).
2. Remove the 14 screws that secure the OCP and swing the instrument panel open.
3. Locate the processor inside the 13-slot chassis that is to be replaced.
4. Remove the processor and memory module as follows (see Figure 3):

CAUTION

Electronic components are sensitive to electrical static. Discharge any electrical static before handling. Failure to do so may damage the components.

CAUTION

There are two different memory modules for the PLC. One for the segmented composite body pump and one for the solid metal body pump. DO NOT INTERCHANGE – Will cause damage to pump.

a. Touch any metal portion of the TWPS chassis to discharge any electrical static.
b. Open the compartment door of the processor.
c. Pull the upper terminal block with its connected wiring off the processor module.
d. Loosen the two screws that hold the lower terminal block in place then pull the lower terminal block off the processor module.
e. With one hand on each end of the processor, press the release tabs and evenly pull the processor out of the 13-slot chassis.
f. Locate the memory module on the processor.
g. Gently pull the memory module from the processor.

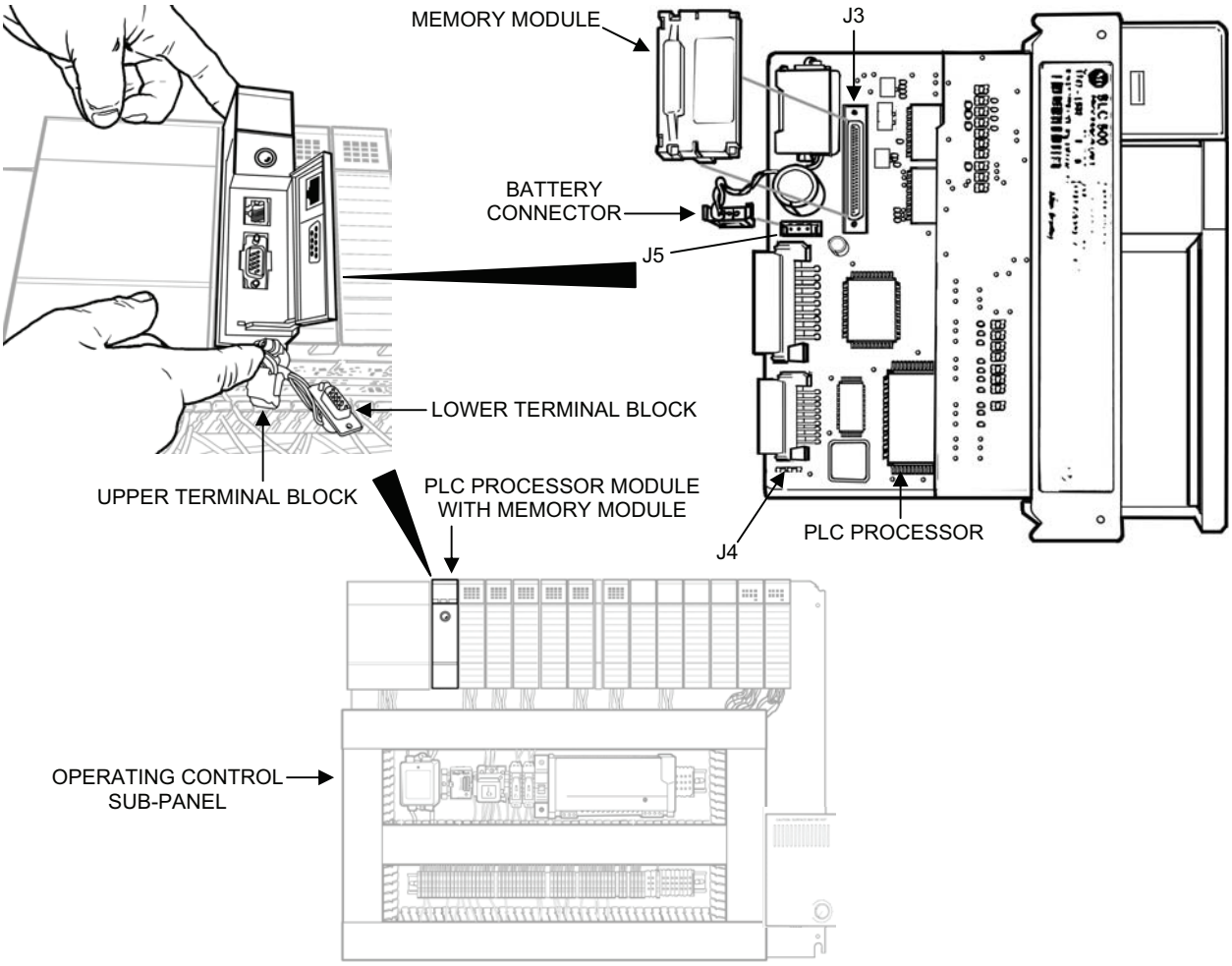

Figure 3. PLC Processor Module and Memory Module Replacement.

5. Install a new processor and/or memory module as follows:
   a. Connect the battery connector wire to J5 of the new processor.
   b. Place the jumper on pins 2 and 3 of J4 of the processor.
   c. Position the new memory module on J3 of the processor and press in place.
   d. Position the processor in the 13-slot chassis and press into place.
   e. Press the lower terminal block with its connected wiring onto the new processor module and secure it with the two screws.
   f. Press the upper terminal block with its connected wiring onto the new processor module.
   g. Close the processor compartment door.
   h. Close and secure the OCP instrument panel using the 14 screws.

AC Input Module, Relay Output Module, or Triac Output Module Replacement:

Parts (TM 10-4610-309-23P):
- AC input module
- Relay output module
- Triac output module

Equipment Condition:
- Army TWPS: Generator off and TWPS main breaker off
- Marine Corps TWPS: TWPS disconnected from power source

Replace the AC input module, the relay output module, or the triac output module on the operating control panel sub-panel as follows:

WARNING

Electrical hazard. Army personnel: make sure that the generator is off and the TWPS main breaker is off before working on the control panel. Marine Corps personnel: make sure that the TWPS is disconnected from its power source before working on the control panel. Failure to observe this warning could result in serious injury or death from electrical shock.

NOTE
Make sure to obtain the correct type of module before replacing.

1. Open the cover to the OCP (see Figure 1).
2. Remove the 14 screws that secure the OCP and swing the instrument panel open.
3. Remove AC input module, relay output module, or triac output module as follows (see Figure 4):
   a. Locate the AC input module, relay output module, or triac output module inside the 13-slot chassis that is to be replaced.

CAUTION

Electronic components are sensitive to electrical static. Discharge any electrical static before handling. Failure to do so may damage the components.

   b. Touch any metal portion of the TWPS chassis to discharge any electrical static.
   c. Open the compartment door of the module.
   d. Loosen the top and bottom screws that hold the terminal block in place, then pull the terminal block with its connected wiring off the module.
   e. With one hand on each end of the module, press the release tabs and evenly pull the module out of the 13-slot chassis.

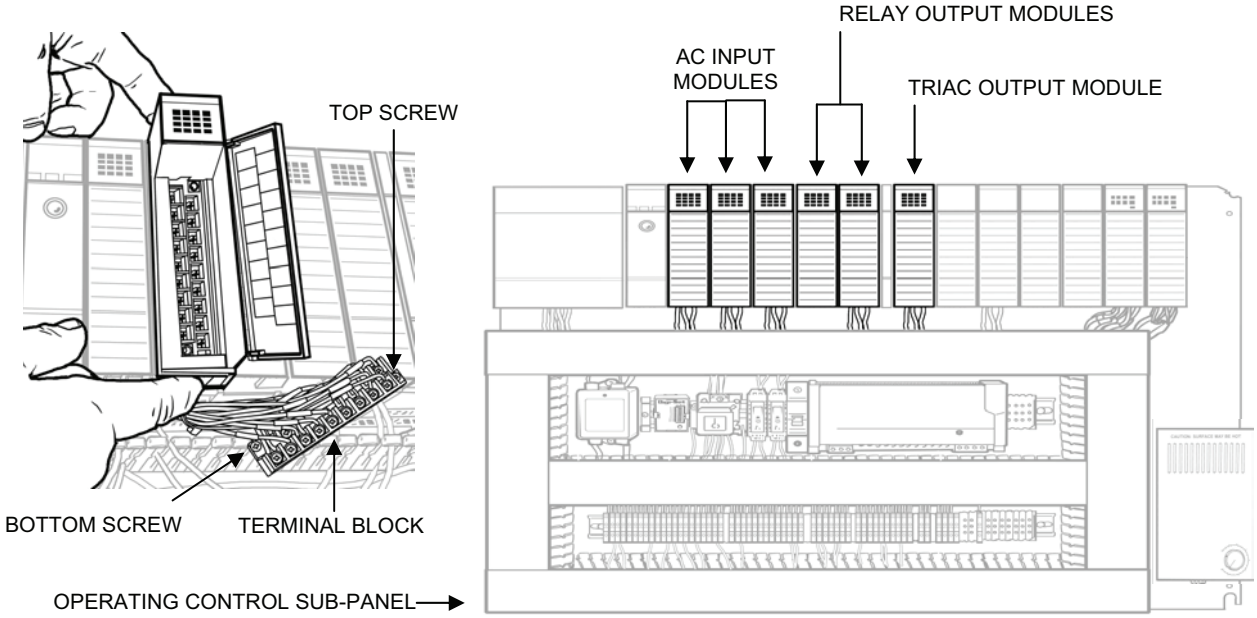

Figure 4. AC Input Module, Relay Output Module, or Triac Output Module Replacement.

4. Install a new AC input module, relay output module, or triac output module as follows:
   a. Position the new module in the 13-slot chassis and press into place.
   b. Press the terminal block with its connected wiring onto the new module and secure it with the two screws.
   c. Close the module compartment door.
   d. Close and secure the OCP instrument panel using the 14 screws.

Analog Output Module Replacement:

Parts:
Analog output module (TM 10-4610-309-23P)
Equipment Condition:
Army TWPS: Generator off and TWPS main breaker off
Marine Corps TWPS: TWPS disconnected from power source

Replace the analog output module on the operating control panel sub-panel as follows:

WARNING

Electrical hazard. Army personnel: make sure that the generator is off and the TWPS main breaker is off before working on the control panel. Marine Corps personnel: make sure that the TWPS is disconnected from its power source before working on the control panel. Failure to observe this warning could result in serious injury or death from electrical shock.

1. Open the cover to the OCP (see Figure 1).
2. Remove the 14 screws that secure the OCP and swing the instrument panel open.
3. Remove an analog output module as follows (see Figure 5):
   a. Locate the analog output module inside the 13-slot chassis that is to be replaced.

CAUTION

Electronic components are sensitive to electrical static. Discharge any electrical static before handling. Failure to do so may damage the components.

   b. Touch any metal portion of the TWPS chassis to discharge any electrical static.
   c. Open the compartment door of the module.
   d. Pull the lower terminal block with its connected wiring off the module.
   e. With one hand on each end of the module, press the release tabs and evenly pull the module out of the 13-slot chassis.

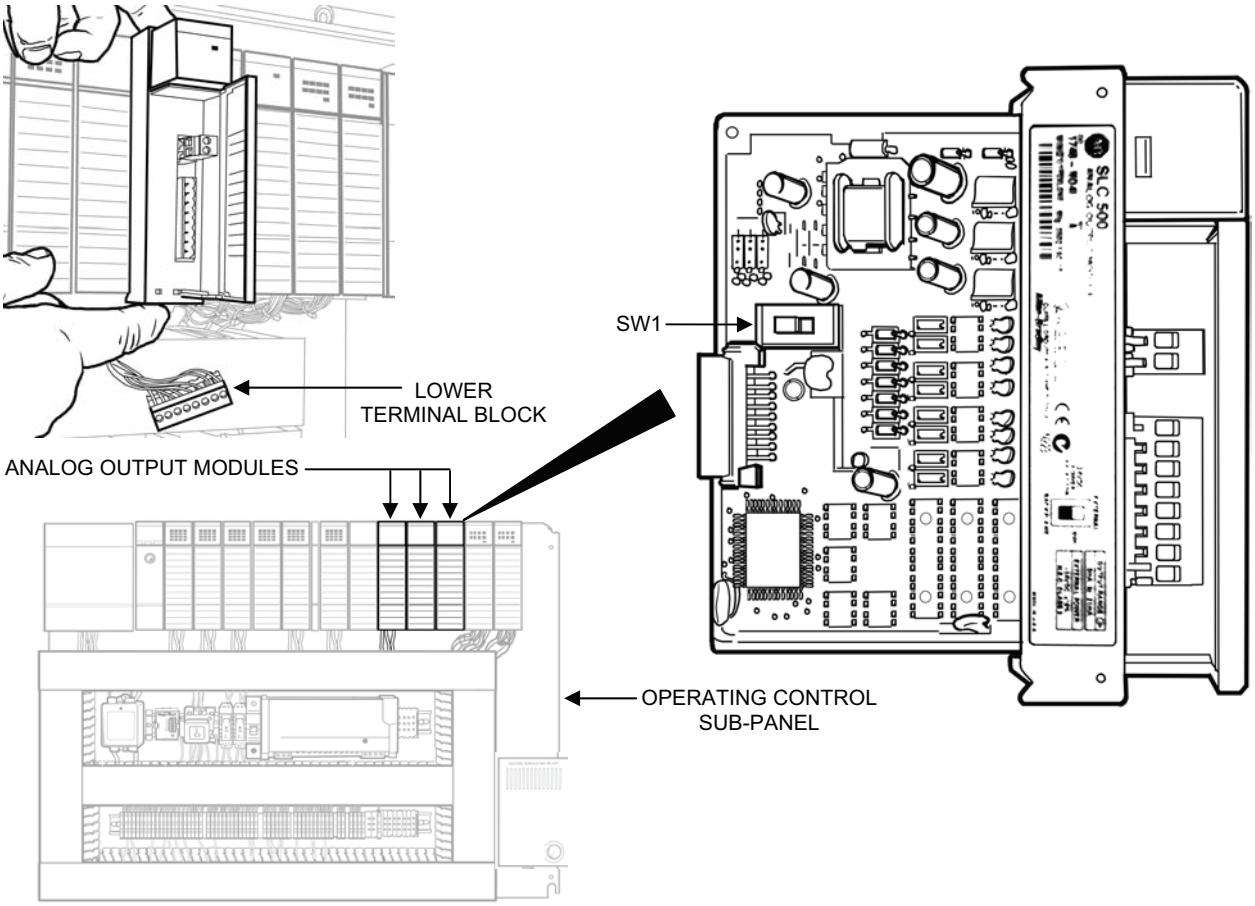

Figure 5. Analog Output Module Replacement.

4. Install a new analog output module as follows:
    a. On the new module, set SW1 to the “BACKPLANE” position.
    b. Position the new module in the 13-slot chassis and press into place.
    c. Press the terminal block with its connected wiring onto the new module.
    d. Close the module compartment door.
    e. Close and secure the OCP instrument panel using the 14 screws.

Analog Input Module Replacement:

Parts:
Analog input module (TM 10-4610-309-23P)
Equipment Condition:
Army TWPS: Generator off and TWPS main breaker off
Marine Corps TWPS: TWPS disconnected from power source

Replace the analog input module on the operating control panel sub-panel as follows:

WARNING

Electrical hazard. Army personnel: make sure that the generator is off and the TWPS main breaker is off before working on the control panel. Marine Corps personnel: make sure that the TWPS is disconnected from its power source before working on the control panel. Failure to observe this warning could result in serious injury or death from electrical shock.

1. Open the cover to the OCP (see Figure 1).
2. Remove the 14 screws that secure the OCP and swing the instrument panel open.
3. Remove the analog input module as follows (see Figure 6):
    a. Locate the analog input module inside the 13-slot chassis that is to be replaced.

CAUTION

Electronic components are sensitive to electrical static. Discharge any electrical static before handling. Failure to do so may damage the components.

    b. Touch any metal portion of the TWPS chassis to discharge any electrical static.
    c. Open the compartment door of the module.
    d. Loosen the top and bottom screws that hold the terminal block in place, then pull the terminal block with its connected wiring off the module.
    e. With one hand on each end of the module, press the release tabs and evenly pull the module out of the 13-slot chassis.

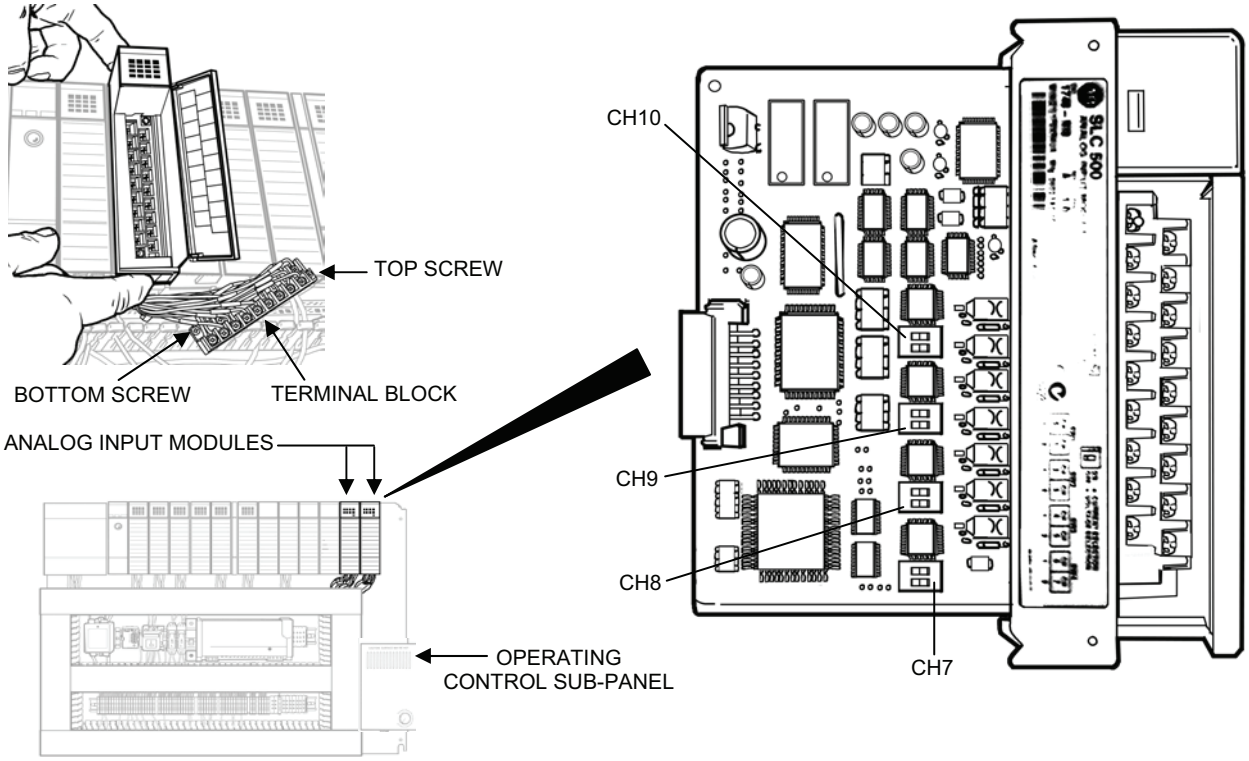

Figure 6. Analog Input Module Replacement.

4. Install a new analog output module as follows:
   a. On the new module, set the jumper switches CH7, CH8, CH9 and CH10 to the settings illustrated in Figure 7 for installation in slot 11 or slot 12.

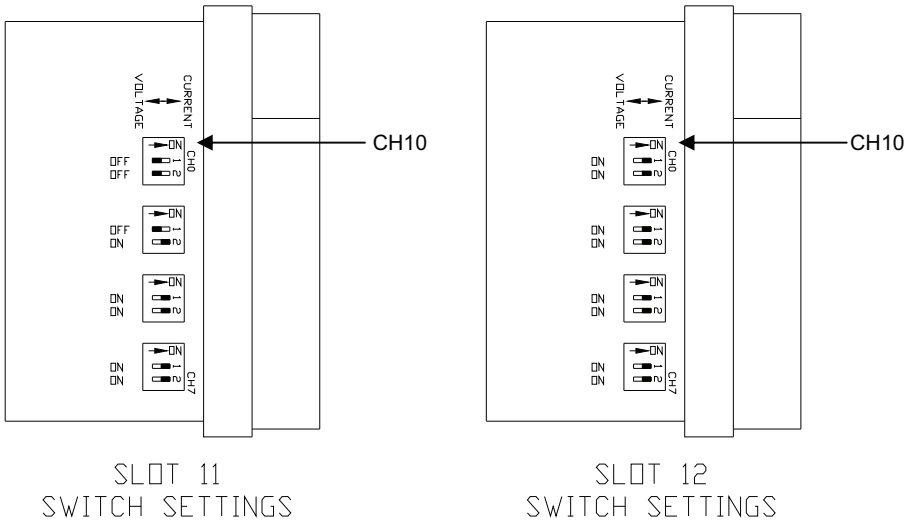

Figure 7. Analog Output Module Switch Settings.

b. Position the new module in the 13-slot chassis and press into place.
c. Press the terminal block with its connected wiring onto the new module and secure it with the two screws.
d. Close the module compartment door.
e. Close and secure the OCP instrument panel using the 14 screws.

13-Slot Chassis Replacement:

Parts:
13-Slot Chassis (TM 10-4610-309-23P)
Equipment Condition:
Army TWPS: Generator off and TWPS main breaker off
Marine Corps TWPS: TWPS disconnected from power source

Replace the 13-slot chassis on the operating control panel sub-panel as follows:

WARNING

Electrical hazard. Army personnel: make sure that the generator is off and the TWPS main breaker is off before working on the control panel. Marine Corps personnel: make sure that the TWPS is disconnected from its power source before working on the control panel. Failure to observe this warning could result in serious injury or death from electrical shock.

1. Open the cover to the OCP (see Figure 8).
2. Remove the 14 screws that secure the OCP and swing the instrument panel open.

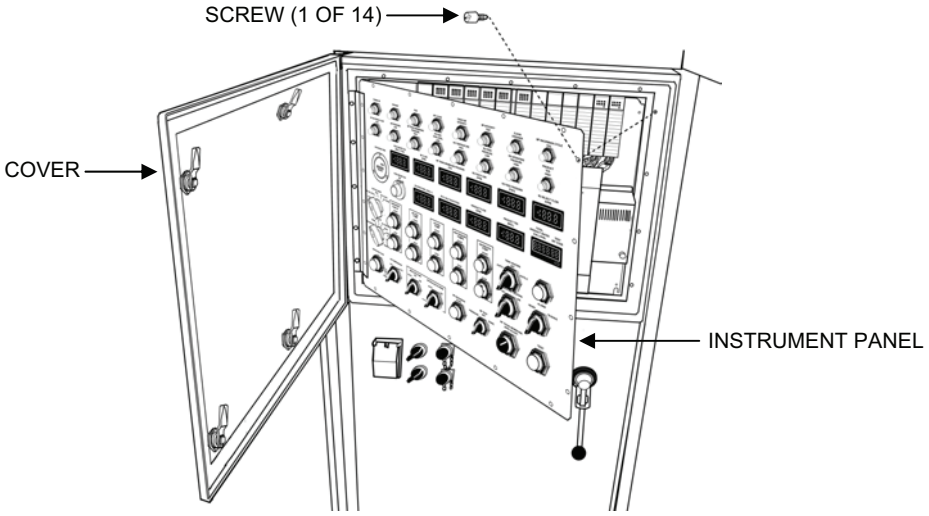

Figure 8. Opening the OCP Instrument Panel.

3. Remove the 13-slot chassis as follows (see Figure 9):
    a. Remove the 13 slot chassis power supply. Refer to **13-Slot Chassis Power Supply Replacement.**
    b. Remove PLC Processor Module. Refer to **PLC Processor Replacement** and **Memory Module Replacement.**
    c. Remove AC input modules and relay output modules. Refer to **AC Input Module Replacement** or **Relay Output Module Replacement**.
    d. Remove analog output modules. Refer to **Analog Output Module Replacement**.
    e. Remove analog input modules. Refer to **Analog Input Module Replacement**.
    f. Remove the four screws from the tabs at the bottom of the 13-slot chassis.
    g. Lift up the 13-slot chassis to clear the four screws in the keyhole brackets at the top of the chassis.
    h. Remove 13-slot chassis from the sub panel.

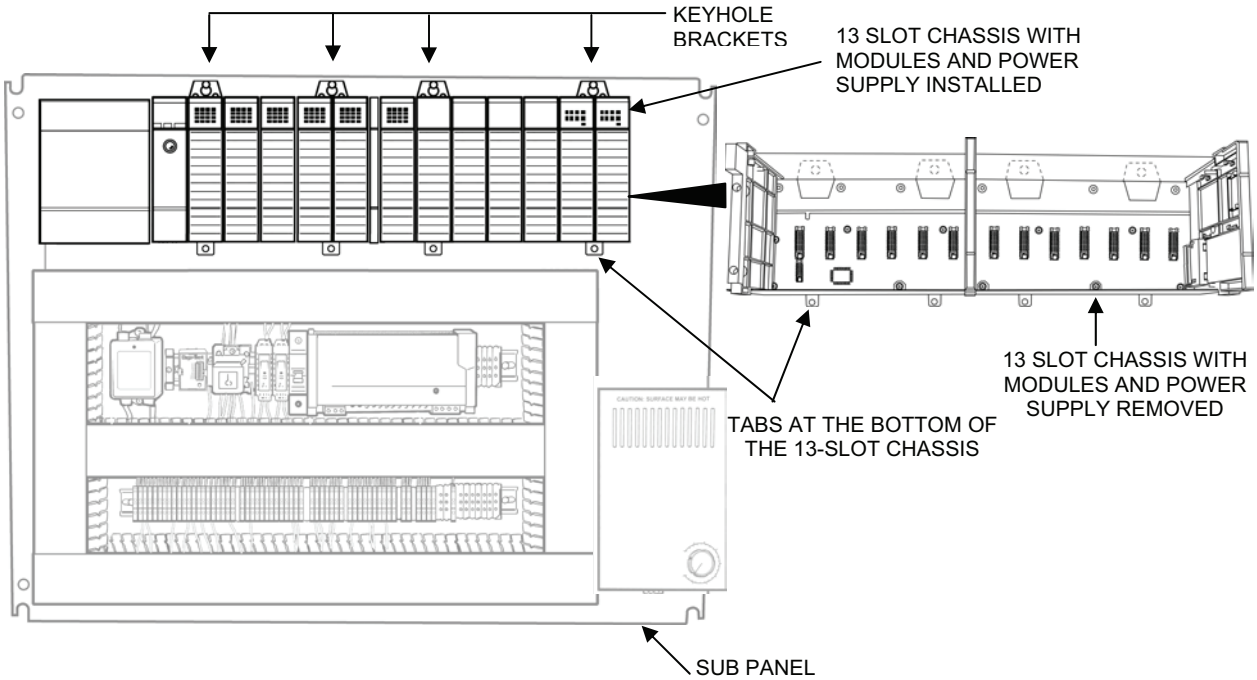

Figure 9. 13-Slot Chassis Replacement.

4. Install the new 13-slot chassis as follows:
    a. Position the 13-slot chassis on the sub panel by placing the chassis keyhole brackets over the four screws at the top of the panel.
    b. Slide the chassis down to secure the keyhole brackets with the screws.
    c. Reinstall the four screws at the bottom of the 13-slot chassis.
    d. Reinstall the 13 slot chassis power supply. Refer to **13-Slot Chassis Power Supply Replacement**.
    e. Reinstall the PLC Processor Module. Refer to **PLC Processor and Memory Module Replacement**.
    f. Reinstall the AC input modules and relay output modules. Refer to **AC Input Module Replacement** or **Relay Output Module Replacement**.

g. Reinstall the analog output modules. Refer to **Analog Output Module Replacement**.
h. Reinstall the analog input modules. Refer to **Analog Input Module Replacement**.

3-Pole Relay Replacement:

Parts:
Relay, 3-pole (TM 10-4610-309-23P)
Equipment Condition:
Army TWPS: Generator off and TWPS main breaker off
Marine Corps TWPS: TWPS disconnected from power source

Replace the 3-pole relay on the operating control panel sub-panel as follows:

WARNING

Electrical hazard. Army personnel: make sure that the generator is off and the TWPS main breaker is off before working on the control panel. Marine Corps personnel: make sure that the TWPS is disconnected from its power source before working on the control panel. Failure to observe this warning could result in serious injury or death from electrical shock.

1. Open the cover to the OCP (see Figure 1).
2. Remove the 14 screws that secure the OCP and swing the instrument panel open.
3. Remove the 3-pole relay as follows (see Figure 10):
   a. Locate the 3-pole relay.
   b. Carefully pull the 3-pole relay out of the relay socket.

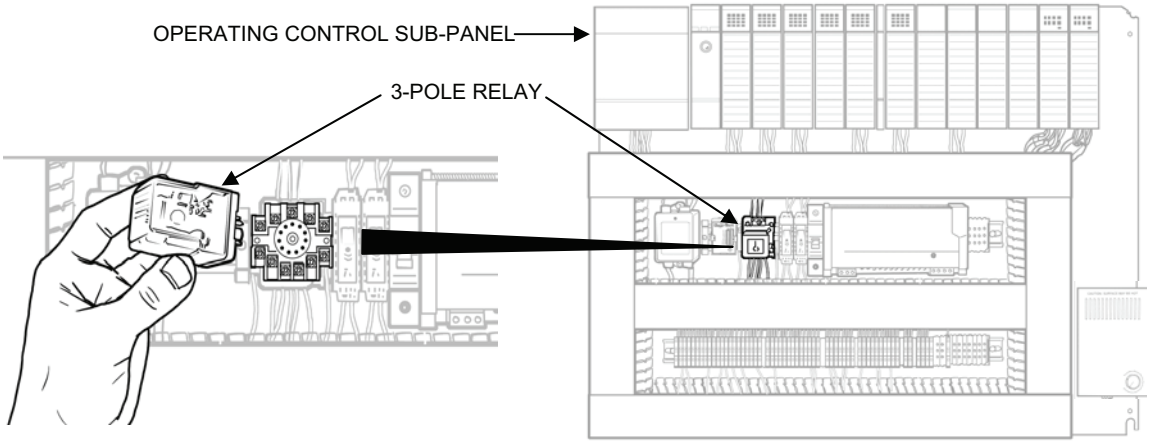

Figure 10. 3-Pole Relay Removal.

4. Install a new 3-pole relay as follows:
   a. Align the new 3-pole relay pins with the relay socket.
   b. Carefully push the 3-pole relay completely into the socket.
   c. Close and secure the OCP instrument panel using the 14 screws.

Time Delay Relay Replacement:

Parts:
Relay, Time Delay (TM 10-4610-309-23P)
Equipment Condition:
Army TWPS: Generator off and TWPS main breaker off
Marine Corps TWPS: TWPS disconnected from power source

Replace the time delay relay on the operating control panel sub-panel as follows:

WARNING

Electrical hazard. Army personnel: make sure that the generator is off and the TWPS main breaker is off before working on the control panel. Marine Corps personnel: make sure that the TWPS is disconnected from its power source before working on the control panel. Failure to observe this warning could result in serious injury or death from electrical shock.

1. Open the cover to the OCP (see Figure 1).
2. Remove the 14 screws that secure the OCP and swing the instrument panel open.
3. Remove the time delay relay as follows (see Figure 11):
   a. Locate the time delay relay.
   b. Un-clip the brackets at the top of the relay.
   c. Carefully pull the time delay relay out of the relay socket.

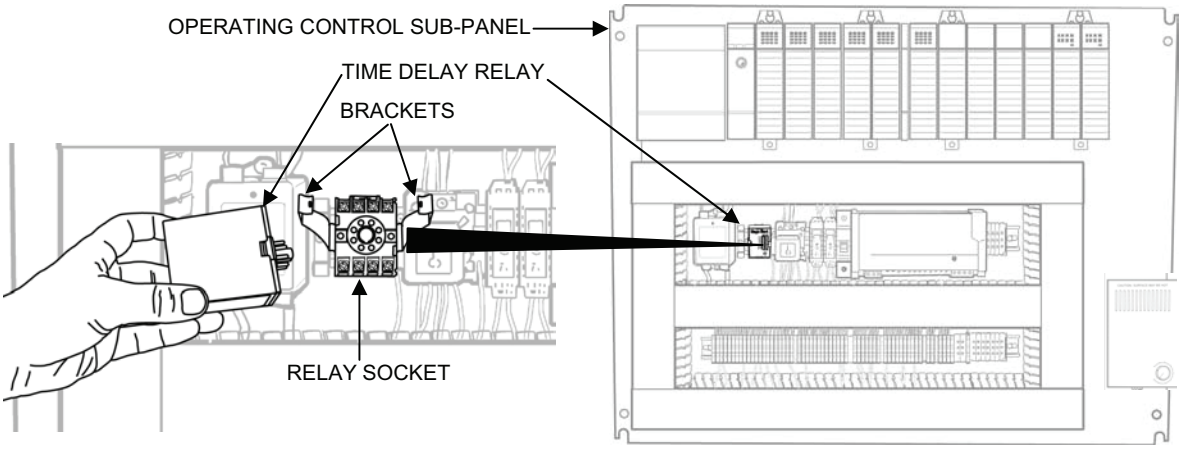

Figure 11. Time Delay Relay Removal.

4. Install a new time delay relay as follows:
    a. On the new time delay relay, set the jumper switches to the settings illustrated in Table 1 to obtain a 2 second time delay.

Table 1. Time Delay Relay Settings

Time	Setting
0.1	OFF
0.2	OFF
0.4	ON
0.8	OFF
1.6	ON
3.2	OFF
6.4	OFF
12.8	OFF
25.6	OFF
51.2	OFF

    b. Align the new time delay relay pins with the relay socket.
    c. Carefully push the time delay relay completely into the socket.
    d. Clip the brackets onto the relay.
    e. Close and secure the OCP instrument panel using the 14 screws.

Power Line Filter Replacement:

Parts:
Power Line Filter (TM 10-4610-309-23P)
Equipment Condition:
Army TWPS: Generator off and TWPS main breaker off
Marine Corps TWPS: TWPS disconnected from power source

Replace the power line filter on the operating control panel sub-panel as follows:

WARNING

Electrical hazard. Army personnel: make sure that the generator is off and the TWPS main breaker is off before working on the control panel. Marine Corps personnel: make sure that the TWPS is disconnected from its power source before working on the control panel. Failure to observe this warning could result in serious injury or death from electrical shock.

1. Open the cover to the OCP (see Figure 1).
2. Remove the 14 screws that secure the OCP and swing the instrument panel open.
3. Remove the power line filter as follows (see Figure 12):
    a. Locate the power line filter.
    b. Remove the two screws, flat washers and tooth washers that secure the power line filter to the sub-panel and retain for reassembly.

c. Tag the wires attached to the power line filter.
d. Carefully pull the connecting wires from the male terminals of the power line filter.
e. Remove the power line filter.

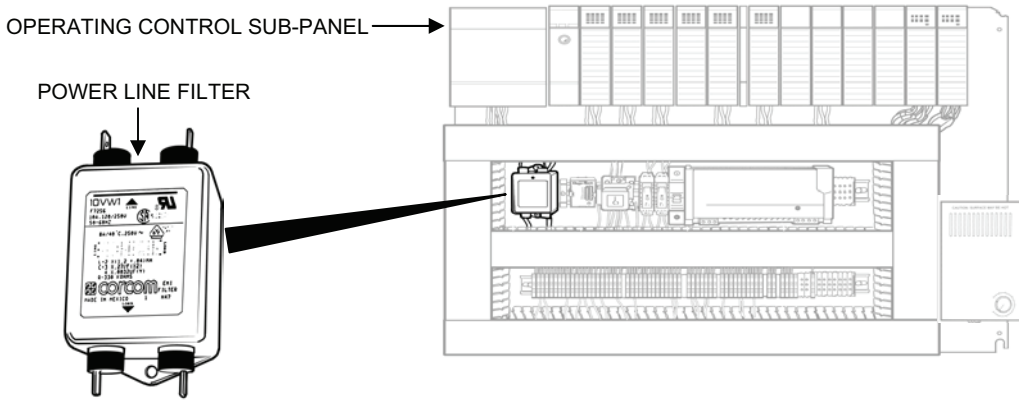

Figure 12. Power Line Filter Removal.

4. Install new power line filter as follows:
   a. Position the new power line filter in the operating control sub-panel.
   b. Attach the connecting wires to the power line filter in accordance to the wire tags.
   c. Secure the power line filter to the sub-panel using the two screws, flat washers and tooth washers.
   d. Remove the wire tags if necessary.
   e. Close and secure the OCP instrument panel using the 14 screws.

Electric Heater Replacement:

Parts:
Electric Heater (TM 10-4610-309-23P)
Equipment Condition:
Army TWPS: Generator off and TWPS main breaker off
Marine Corps TWPS: TWPS disconnected from power source

Replacing the electric heater on the operating control panel sub-panel as follows:

WARNING

Electrical hazard. Army personnel: make sure that the generator is off and the TWPS main breaker is off before working on the control panel. Marine Corps personnel: make sure that the TWPS is disconnected from its power source before working on the control panel. Failure to observe this warning could result in serious injury or death from electrical shock.

1. Open the cover to the OCP (see Figure 1).
2. Remove the 14 screws that secure the OCP and swing the instrument panel open.

3. Remove electric heater as follows (see Figure 13):
   a. Locate the electric heater.
   b. Remove the four screws and tooth washers that secure the electric heater to the sub-panel and retain for reassembly.
   c. Carefully lift the electric heater from panel.
   d. With a small flat tip screwdriver, press in the tension release slots to remove wires from terminal at bottom of electric heater.

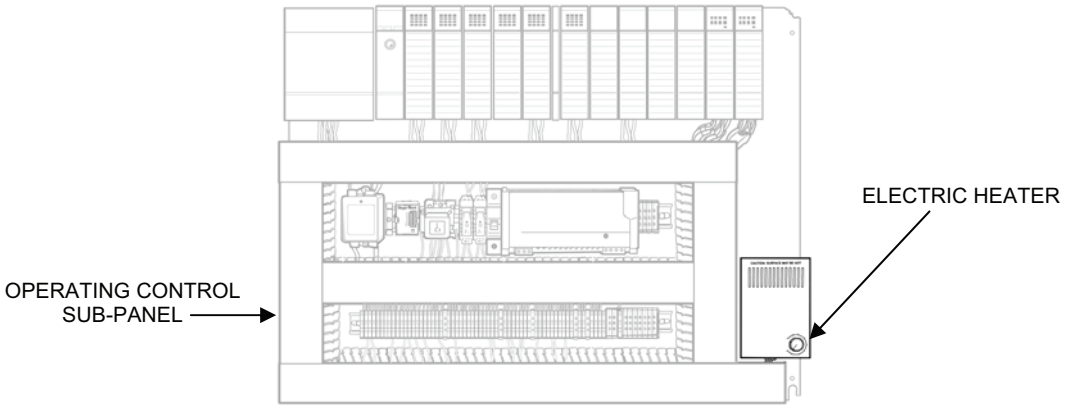

Figure 13. Electric Heater Removal.

4. Install new electric heater as follows:
   a. Position the new electric heater in the terminal block connection at the bottom of the electric heater.
   b. Secure the electric heater to the sub-panel using the four screws and tooth washers.
   c. Close and secure the OCP instrument panel using the 14 screws.

Solid State Relay Replacement:

Parts:
Solid State Relay (TM 10-4610-309-23P)
Equipment Condition:
Army TWPS: Generator off and TWPS main breaker off
Marine Corps TWPS: TWPS disconnected from power source

Replace the solid-state relay of the Operating Control Panel Sub-Panel as follows:

WARNING

Electrical hazard. Army personnel: make sure that the generator is off and the TWPS main breaker is off before working on the control panel. Marine Corps personnel: make sure that the TWPS is disconnected from its power source before working on the control panel. Failure to observe this warning could result in serious injury or death from electrical shock.

1. Open the cover to the OCP (see Figure 1).
2. Remove the 14 screws that secure the OCP and swing the instrument panel open.
3. Remove the solid state relay as follows (see Figure 14):
    a. Locate the solid-state relay.
    b. Tag the wires connected to the solid-state relay.
    c. Using a flat tip screwdriver, insert it into the DIN rail holding clip at the bottom of the solid-state relay. Gently pry down on the holding clip with the screwdriver to release the clip from the DIN rail and then lift up on the solid-state relay to remove from the DIN rail.
    d. Loosen the screw connections and remove the connecting wires

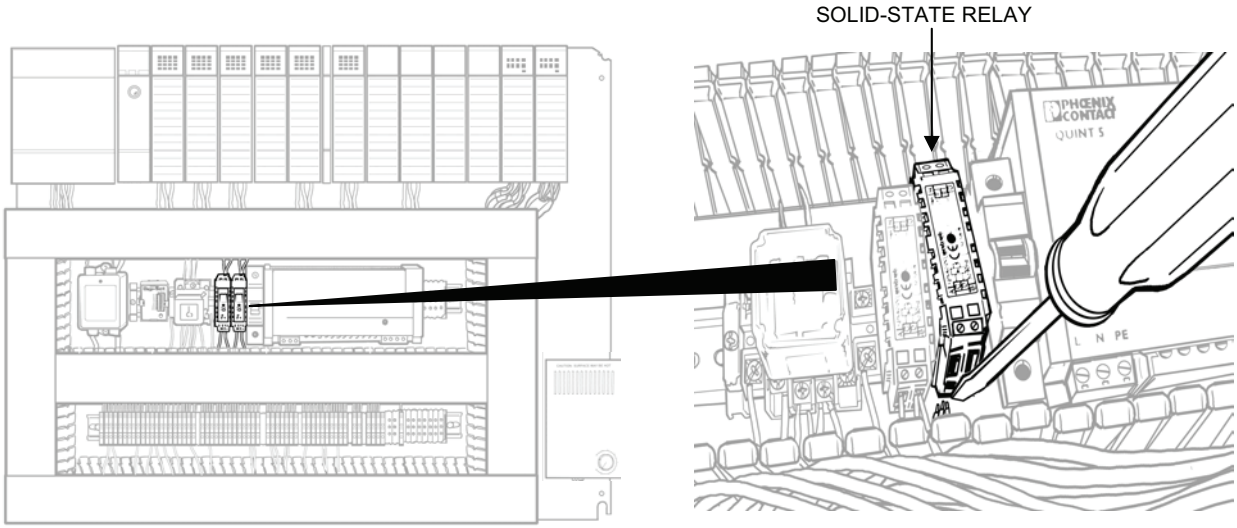

Figure 14. Solid State Relay Removal.

4. Install a new solid state relay as follows:
    a. Insert the wires into the screw connections in accordance to the wire tags on the new solid state relay.
    b. Position the new solid-state relay on the DIN rail.
    c. Carefully pull the built-in clamp of the component with a small flat tip screwdriver while pressing the component on the DIN rail.
    d. Tighten the screw connections to secure the wires.
    e. Remove the wire tags if necessary.
    f. Close and secure the OCP instrument panel using the 14 screws.

Circuit Breaker Replacement:

Parts:
Circuit Breaker (TM 10-4610-309-23P)
Equipment Condition:
Army TWPS: Generator off and TWPS main breaker off
Marine Corps TWPS: TWPS disconnected from power source
Replace the circuit breaker of the Operating Control Panel Sub-Panel as follows:

WARNING

Electrical hazard. Army personnel: make sure that the generator is off and the TWPS main breaker is off before working on the control panel. Marine Corps personnel: make sure that the TWPS is disconnected from its power source before working on the control panel. Failure to observe this warning could result in serious injury or death from electrical shock.

1. Open the cover to the OCP (see Figure 1).
2. Remove the 14 screws that secure the OCP and swing the instrument panel open.
3. Remove the circuit breaker as follows (see Figure 15):
    a. Locate the circuit breaker.
    b. Tag the wires connected to the circuit breaker.
    c. Using a flat tip screwdriver, insert it into the DIN rail holding clip at the bottom of the circuit breaker. Gently pry down on the holding clip with the screwdriver to release the clip from the DIN rail and then lift up on the circuit breaker to remove from the DIN rail.
    d. Loosen the screw connections and remove the connecting wires.

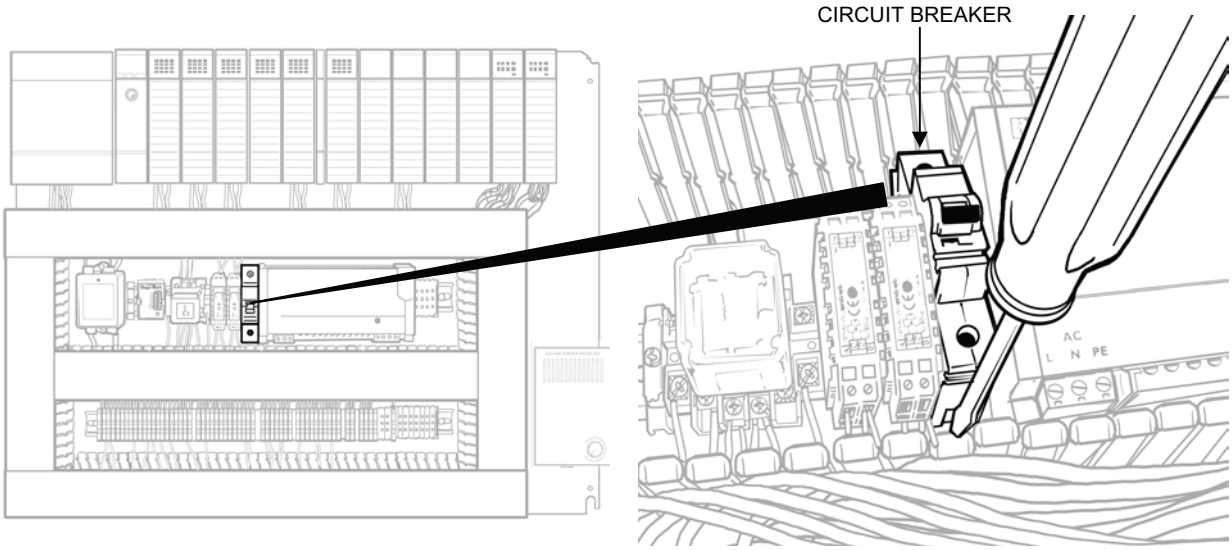

Figure 15. Circuit Breaker Removal.

4. Install a new circuit breaker as follows:
    a. Insert the wires into the screw connections in accordance to the wire tags on the new circuit breaker.
    b. Position the new circuit breaker on the DIN rail.
    c. Tighten the screw connections to secure the wires.
    d. Remove the wire tags if necessary.
    e. Close and secure the OCP instrument panel using the 14 screws.

Instrumentation Power Supply Replacement:

Parts:
Power Supply, Instrumentation (TM 10-4610-309-23P)
Equipment Condition:
Army TWPS: Generator off and TWPS main breaker off
Marine Corps TWPS: TWPS disconnected from power source

Replace the instrumentation power supply of the Operating Control Panel Sub-Panel as follows:

WARNING

Electrical hazard. Army personnel: make sure that the generator is off and the TWPS main breaker is off before working on the control panel. Marine Corps personnel: make sure that the TWPS is disconnected from its power source before working on the control panel. Failure to observe this warning could result in serious injury or death from electrical shock.

1. Open the cover to the OCP (see Figure 1).
2. Remove the 14 screws that secure the OCP and swing the instrument panel open.
3. Remove the instrumentation power supply as follows (see Figure 16):
   a. Locate the instrumentation power supply.
   b. Tag the wires connected to the instrumentation power supply.
   c. Pry down on the top terminal blocks on the left and right side of the power supply to disconnect the power supply.
   d. Gently pry down on the built-in clamp of the instrumentation power supply with a small flat tip screwdriver while lifting up on the instrumentation power supply to remove from the DIN rail.

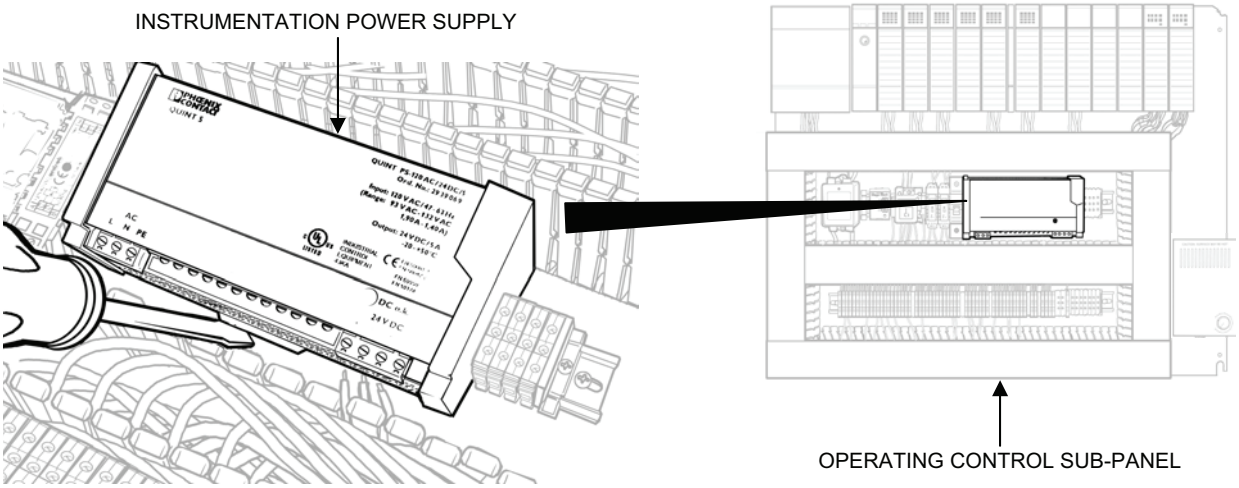

Figure 16. Instrumentation Power Supply Removal.

4. Install a new the instrumentation power supply as follows:
    a. Position the instrumentation power supply on the DIN rail.
    b. Press down on the lower part of the power supply to engage the DIN rail clip.
    c. Reconnect the two terminal blocks to the bottom of the power supply.
    d. Close and secure the OCP instrument panel using the 14 screws.

AC or DC Terminal Replacement:

Parts:
AC Terminal (TM 10-4610-309-23P)
DC Terminal (TM 10-4610-309-23P)
Equipment Condition:
Army TWPS: Generator off and TWPS main breaker off
Marine Corps TWPS: TWPS disconnected from power source

Replace an AC or DC terminal on the operating control panel sub-panel as follows:

WARNING

Electrical hazard. Army personnel: make sure that the generator is off and the TWPS main breaker is off before working on the control panel. Marine Corps personnel: make sure that the TWPS is disconnected from its power source before working on the control panel. Failure to observe this warning could result in serious injury or death from electrical shock.

NOTE
Make sure to obtain the correct type of terminal before replacing.

1. Open the cover to the OCP (see Figure 1).
2. Remove the 14 screws that secure the OCP and swing the instrument panel open.
3. Remove AC terminals (blue) or DC terminals (gray) as follows (see Figure 17):
    a. Locate the AC or DC terminal.
    b. Tag the wires connected to the terminal.
    c. Loosen the screw connections and remove the connecting wires.
    d. Gently pry down on the tab at the bottom of the terminal while lifting up on the terminal to remove from the DIN rail.

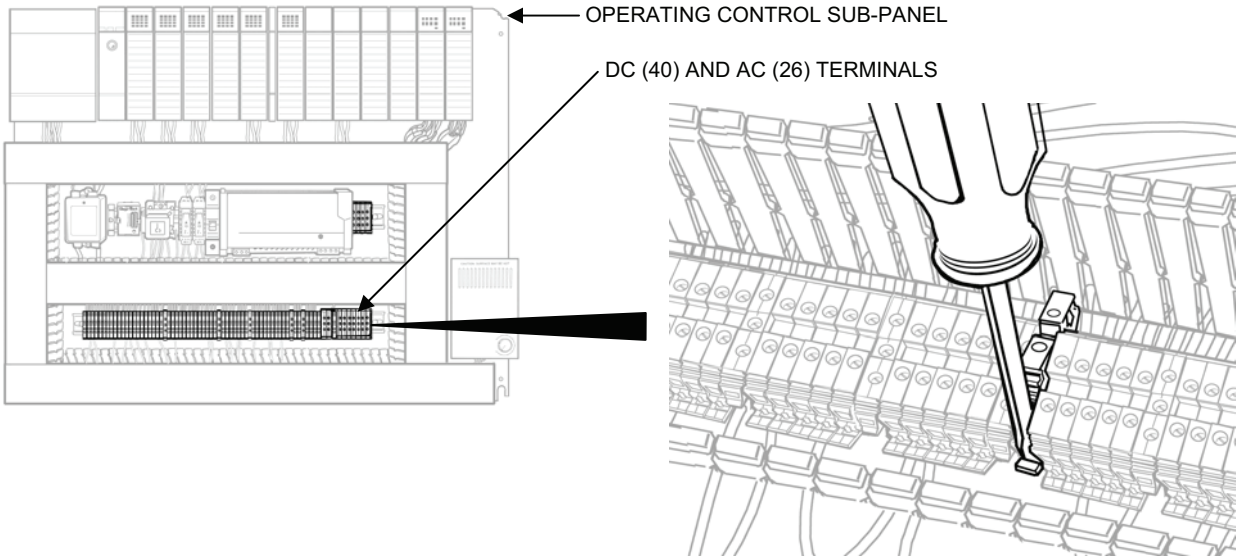

Figure 17. AC or DC Terminal Removal.

4. Install the new AC or DC terminal as follows:
    a. Position the new AC or DC terminal on the DIN rail and snap into place.
    b. Insert the wires in the screw connections in accordance to the wire tags.
    c. Tighten the screw connections to secure the wires.
    d. Remove the wire tags if necessary.
    e. Close and secure the OCP instrument panel using the 14 screws.

Ground Terminal Replacement:

Parts:
Ground Terminal (TM 10-4610-309-23P)
Equipment Condition:
Army TWPS: Generator off and TWPS main breaker off
Marine Corps TWPS: TWPS disconnected from power source

Replace the ground terminal on the operating control panel sub-panel as follows:

1. Open the cover to the OCP (see Figure 1).
2. Remove the 14 screws that secure the OCP and swing the instrument panel open.
3. Remove ground terminal (green/yellow) as follows (see Figure 18):
    a. Locate the ground terminal.
    b. Tag wires connected to the terminal.
    c. Loosen the screw connections and remove the wires.
    d. Loosen the center screw on the ground terminal and then lift the terminal off the DIN rail.

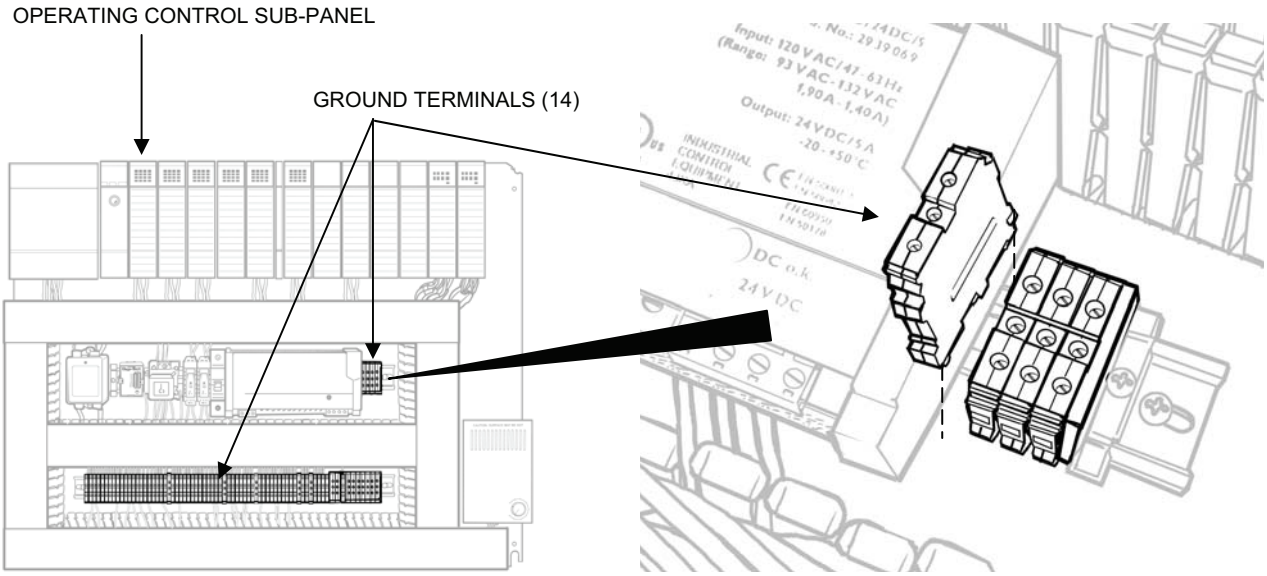

Figure 18. Ground Terminal Removal.

4. Install the new ground terminal as follows:
    a. Position the ground terminal onto the DIN rail.
    b. Tighten the center screw on the ground terminal to secure to the DIN rail.
    c. Insert the wires in the screw connections in accordance to the wire tags.
    d. Tighten the screw connections to secure the wires.
    e. Remove the wire tags if necessary.
    f. Close and secure the OCP instrument panel using the 14 screws.

END OF WORK PACKAGE

TACTICAL WATER PURIFICATION SYSTEM (TWPS) FIELD MAINTENANCE PROCEDURES FEED FLOW CONTROL PANEL

0022 00

THIS SECTION COVERS:
Replace

INITIAL SETUP:

Maintenance Level
Field
Tools
Army: General Mechanic's Tool Kit (WP 0037)
Marine Corps: Common No. 1 Tool Set (WP 0037)
Reference:
Refer to TM 10-4610-309-23P for repair parts information
Personnel Required
One
Equipment Condition
TWPS in Standby Shutdown Without Draining Down
Army TWPS: Generator off and TWPS main breaker off
Marine Corps TWPS: TWPS disconnected from power source

GENERAL:

This work package contains information and instructions for replacing components in the air system feed flow control panel of the TWPS. If you are unable to return a component or assembly to workable condition by following the repair procedure, replace the complete panel assembly. The procedures covered in this work package include, in order:

- Air System Bleed Down Procedures
- Feed Flow Control Panel Assembly Replacement
- Pressure Regulating Valve PRV-904 Replacement
- IP Transducer FY-102 Replacement
- Three Way Solenoid Valve XV-912 Replacement
- Feed Control Selector Valve V-914 Replacement
- Pressure Gauge 0-30 psig PI-904 Replacement

All feed flow control panel repair procedures in this work package, can be performed on the TWPS.

AIR SYSTEM BLEED DOWN PROCEDURES

WARNING

The TWPS must be in Shutdown and the TQG and TWPS main breaker must be off (Army) or the TWPS disconnected from its power source (Marine Corps) prior to performing maintenance on the TWPS Air System. Failure to observe this warning can result in injury to personnel and damage to equipment.

High pressure. The air system contains air pressure up to 1800 psig. The air system must be bled prior to performing maintenance on components of the air system. Failure to observe this warning can result in injury to personnel and damage to equipment.

Bleed the air system as follows:

1. Make sure TWPS is in Standby Shutdown without Draining Down (WP 0013, TM 10-4610-309-10).
2. Bleed the air system as follows (see Figure 1 for valve location):
   a. Stop the air compressor by switching the Air Compressor control at the OCP to OFF.
   b. Close Air Receiver Tank Shut-Off Valve V-907.
   c. Make sure that Low Pressure Air Shut Off Valve V-909 is open.
   d. **Slowly** open Low Pressure Air Vent Valve V-910 to bleed the air from the air system.

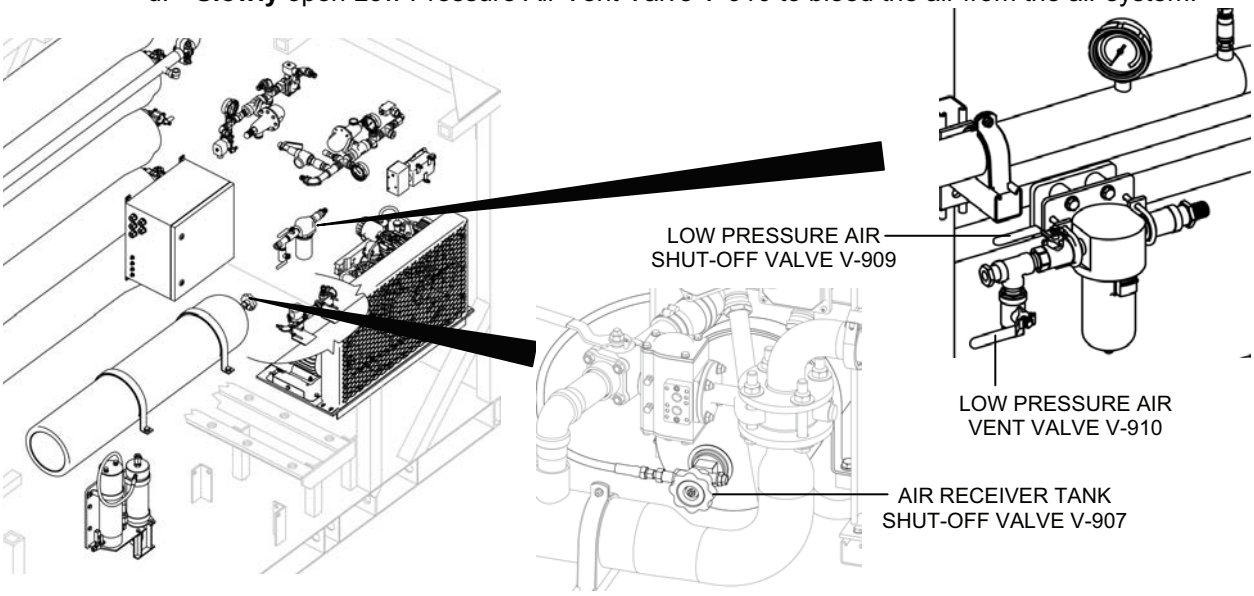

Figure 1. Valves for Bleeding the Air System.

REPLACE

Feed Flow Control Panel Assembly Replacement:

Parts:
Feed Flow Control Panel Assembly (TM 10-4610-309-24P)
Equipment Condition:
TWPS in Standby Shutdown Without Draining Down
Army TWPS: Generator off and TWPS main breaker off
Marine Corps TWPS: TWPS disconnected from power source

WARNING

The TWPS must be in Shutdown and the TQG and TWPS main breaker must be off (Army) or the TWPS disconnected from its power source (Marine Corps) prior to performing maintenance on the TWPS Air System. Failure to observe this warning can result in injury to personnel and damage to equipment.

High pressure. The air system contains air pressure up to 1800 psig. The air system must be bled prior to performing maintenance on components of the air system. Failure to observe this warning can result in injury to personnel and damage to equipment.

Replace the feed flow control panel assembly as follows:

1. Bleed the air system. Refer to **AIR SYSTEM BLEED DOWN PROCEDURES**.
2. Remove the feed flow control panel assembly from the TWPS as follows (see Figure 2):

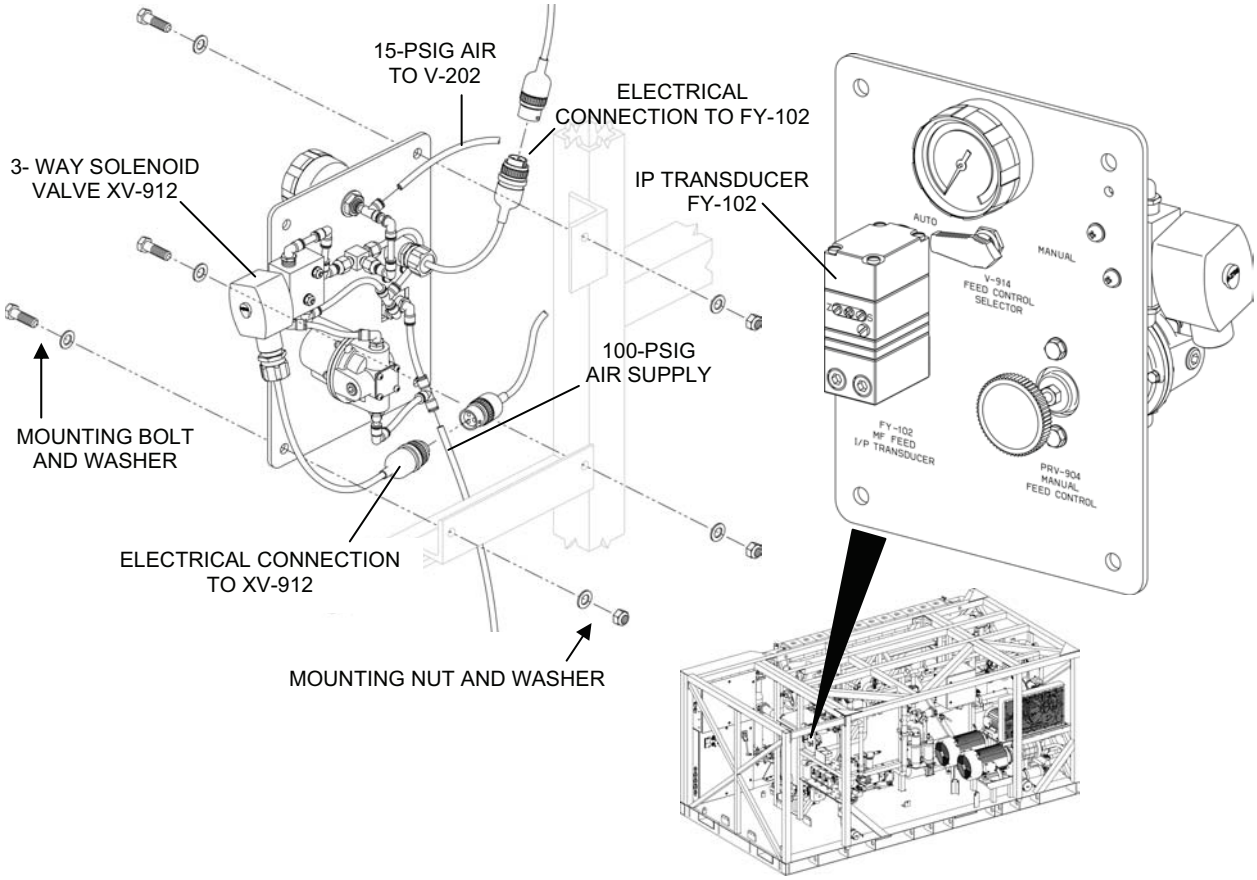

Figure 2. Feed Flow Control Panel Removal.

   a. Disconnect the air hose that supplies 100-psig air to the Feed Flow Control Panel.
   b. Disconnect the air hose that supplies 15-psig air to Filtrate Flow Control Valve V-202.
   c. Disconnect and tag the electrical connection from Transducer FY-102.
   d. Disconnect and tag the electrical connection from 3-Way Solenoid Valve XV-912.
   e. Remove the bolts, nuts, and washers that secure the feed flow control panel assembly to the TWPS.
2. Install the new feed flow control panel as follows (see Figure 2):
   a. Install the feed flow control panel assembly to the TWPS using 4 bolts and nuts and 8 washers.
   b. Reconnect the electrical connection to Transducer FY-102.
   c. Reconnect the electrical connection to 3-Way Solenoid Valve XV-912.
   d. Reconnect the 15-psig air hose.
   e. Reconnect the 100-psig air hose.

Pressure Regulating Valve PRV-904 Replacement:

Parts:
Pressure Regulating Valve PRV-904 (TM 10-4610-309-23P)
Material:
Antiseizing tape (WP 0038, Table 1, item 49, 50)
Equipment Condition:
TWPS in Standby Shutdown Without Draining Down
Army TWPS: Generator off and TWPS main breaker off
Marine Corps TWPS: TWPS disconnected from power source

WARNING

The TWPS must be in Shutdown and the TQG and TWPS main breaker must be off (Army) or the TWPS disconnected from its power source (Marine Corps) prior to performing maintenance on the TWPS Air System. Failure to observe this warning can result in injury to personnel and damage to equipment.

High pressure. The air system contains air pressure up to 1800 psig. The air system must be bled prior to performing maintenance on components of the air system. Failure to observe this warning can result in injury to personnel and damage to equipment.

Replace Pressure Regulating Valve PRV-904 as follows:

1. Remove Pressure Regulating Valve PRV-904 from the feed flow control panel assembly as follows (see Figure 3):
    a. Bleed the air system. Refer to **AIR SYSTEM BLEED DOWN PROCEDURES**.
    b. Disconnect the upper and lower tubes from the regulating valve.
    c. Unscrew the lock nut that holds the adjusting knob in place; remove and retain the knob.
    d. Remove the two bolts, lock washers, and flat washers that hold the pressure-regulating valve to the panel assembly and remove the pressure-regulating valve.
    e. Remove the two tubing adapters from the regulating valve and clean the threads.

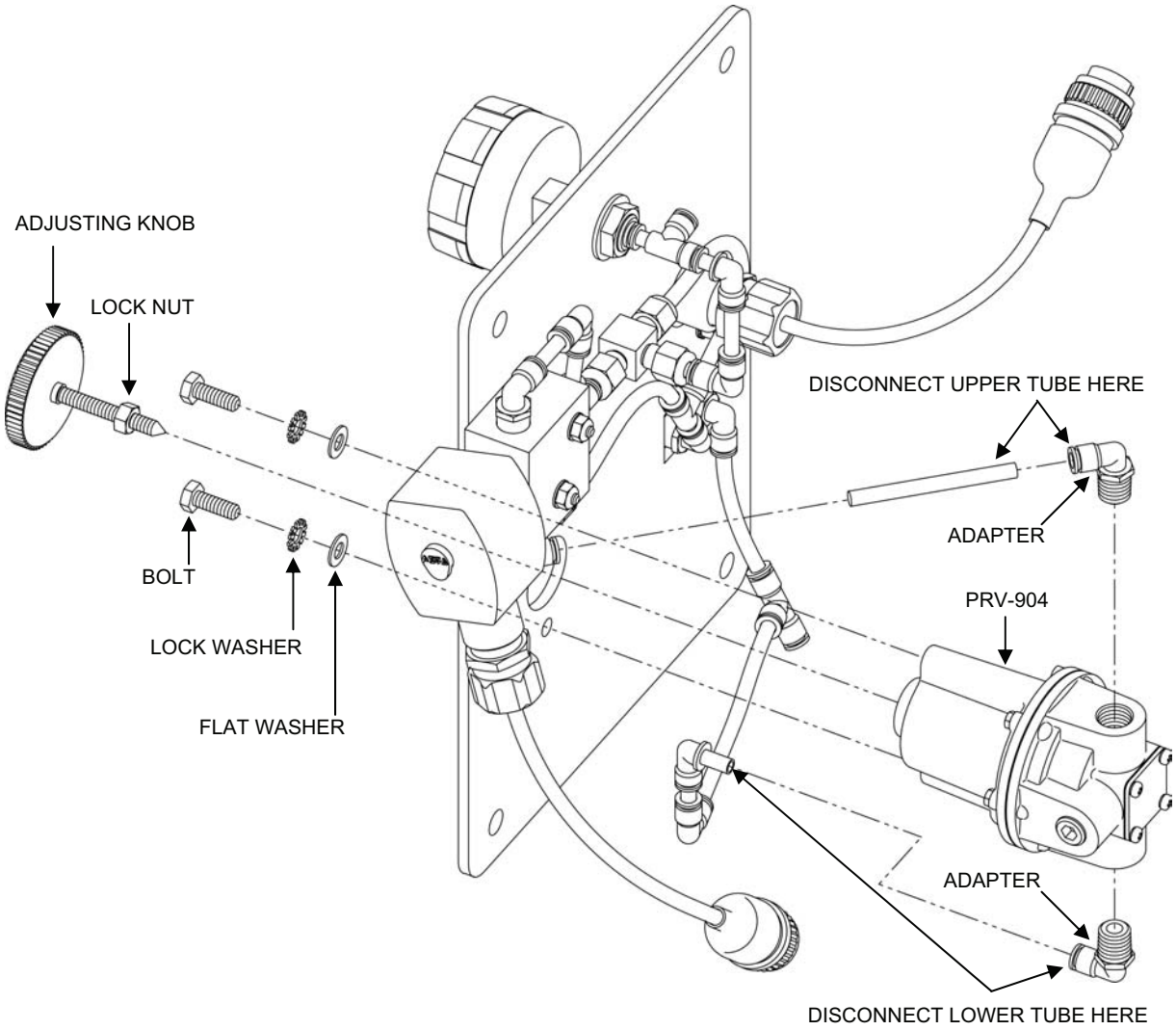

Figure 3. Pressure Regulating Valve PRV-904.

2. Install the new pressure regulating valve onto the feed flow control panel assembly as follows:
   a. Apply antiseizing tape to the threads of the two tubing adapters removed from the old valve.
   b. Install the tubing adapters into the new pressure-regulating valve.
   c. Mount the regulator valve bracket to the control panel; then install the two screws that secure the regulator to the front of the panel.
   d. Install the adjusting knob to the stem of the regulating valve and secure the locknut.
   e. Connect the tubes that were disconnected from the old valve to the same adapters in the new valve.
3. Check the feed flow control panel assembly for leaks and proper operation.

IP Transducer FY-102 Replacement:

Parts:
IP Transducer FY-102 (TM 10-4610-309-23P)
Material:
Antiseizing tape (WP 0038, Table 1, item 49, 50)
Equipment Condition:
TWPS in Standby Shutdown Without Draining Down
Army TWPS: Generator off and TWPS main breaker off
Marine Corps TWPS: TWPS disconnected from power source

WARNING

The TWPS must be in Shutdown and the TQG and TWPS main breaker must be off (Army) or the TWPS disconnected from its power source (Marine Corps) prior to performing maintenance on the TWPS Air System. Failure to observe this warning can result in injury to personnel and damage to equipment.

High pressure. The air system contains air pressure up to 1800 psig. The air system must be bled prior to performing maintenance on components of the air system. Failure to observe this warning can result in injury to personnel and damage to equipment.

Replace IP Transducer FY-102 as follows:

1. Remove the IP Transducer FY-102 from the feed flow control panel assembly as follows (See Figure 4):
    a. Bleed the air system. Refer to **AIR SYSTEM BLEED DOWN PROCEDURES**.
    b. Disconnect the IP Transducer FY-102 electrical connection.
    c. Disconnect the two tubing connections from the IP transducer.
    d. Remove the two screws, lock washers, and flat washers that hold the IP transducer to the panel assembly and remove the transducer.
    e. Remove the two tubing adapters from the IP transducer and clean the threads.

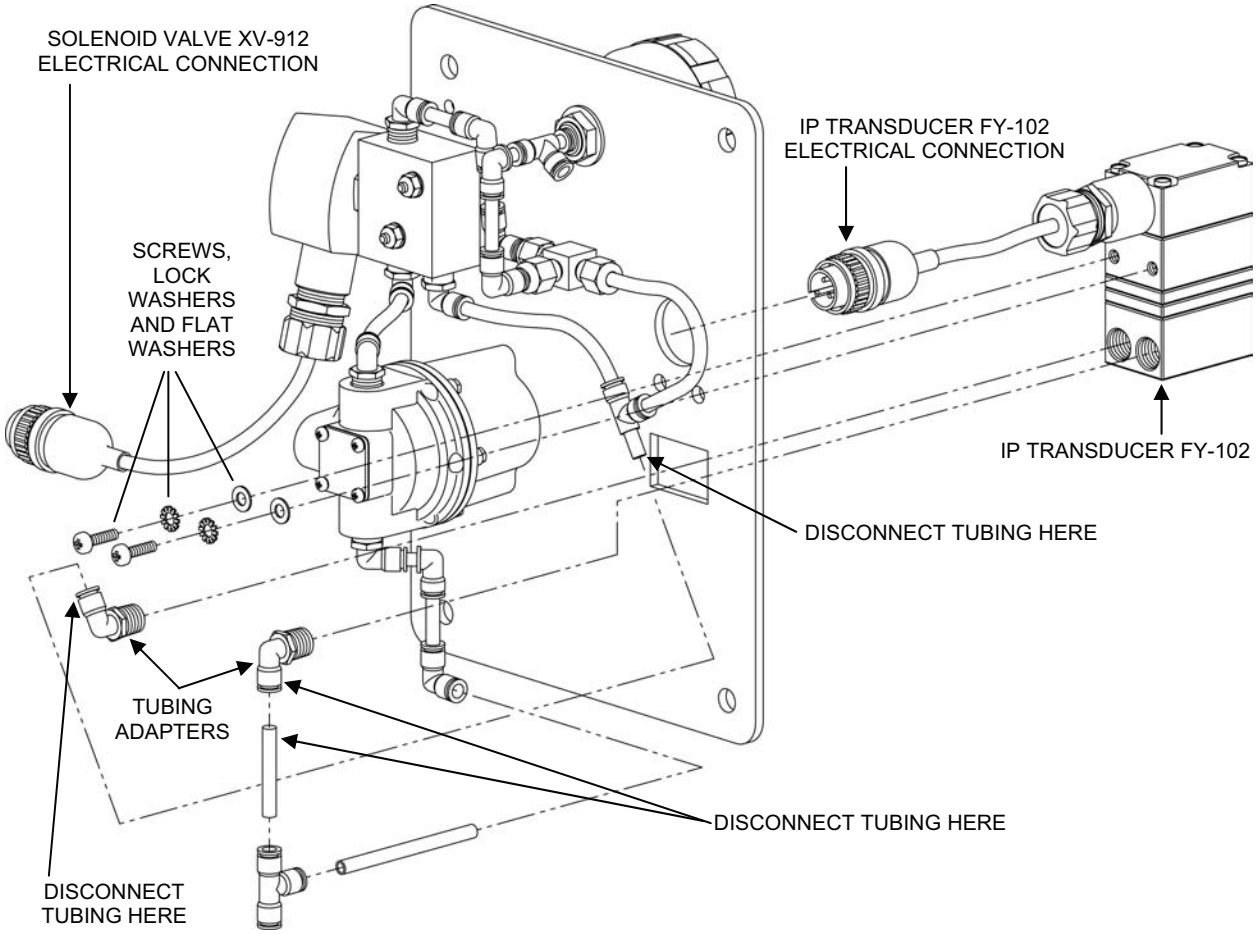

Figure 4. IP Transducer FY-102.

2. Install the IP transducer into the feed flow control panel assembly as follows:
    a. Apply antiseizing tape to the adapter threads.
    b. Install the adapters in the new IP transducer in the same positions as they were in the old transducer. Do not over-tighten.
    c. Mount the IP transducer to the panel assembly, then install and tighten the two screws, lock washers, and flat washers.
    d. Connect the tubes that were disconnected from the old transducer to the same adapters in the new transducer.
    e. Reconnect the electrical connection to IP Transducer FY-102.
3. Check the feed flow control panel for proper operation and leaks.

Three-Way Solenoid Valve XV-912 Replacement:

Parts:
Three-Way Solenoid Valve XV-912 (TM 10-4610-309-23P)
Materials:
Antiseizing tape (WP 0038, Table 1, item 49, 50)
Equipment Condition:
TWPS in Standby Shutdown Without Draining Down
Army TWPS: Generator off and TWPS main breaker off
Marine Corps TWPS: TWPS disconnected from power source

WARNING

The TWPS must be in Shutdown and the TQG and TWPS main breaker must be off (Army) or the TWPS disconnected from its power source (Marine Corps) prior to performing maintenance on the TWPS Air System. Failure to observe this warning can result in injury to personnel and damage to equipment.

High pressure. The air system contains air pressure up to 1800 psig. The air system must be bled prior to performing maintenance on components of the air system. Failure to observe this warning can result in injury to personnel and damage to equipment.

Replace 3-Way Solenoid Valve XV-912 as follows:

1. Remove 3-Way Solenoid Valve XV-912 from the feed flow control panel assembly as follows (see Figure 5):
   a. Bleed the air system. Refer to **AIR SYSTEM BLEED DOWN PROCEDURES**.
   b. Disconnect the solenoid electrical connection.
   c. Disconnect the tubing from the three tubing adapters on the solenoid valve.
   d. Remove the 2 lock nuts, 2 flat washers, and 2 screws that hold the 3-way valve to the control panel and remove the solenoid valve.
   e. Remove the three tubing adapters from the old solenoid valve and clean the threads.

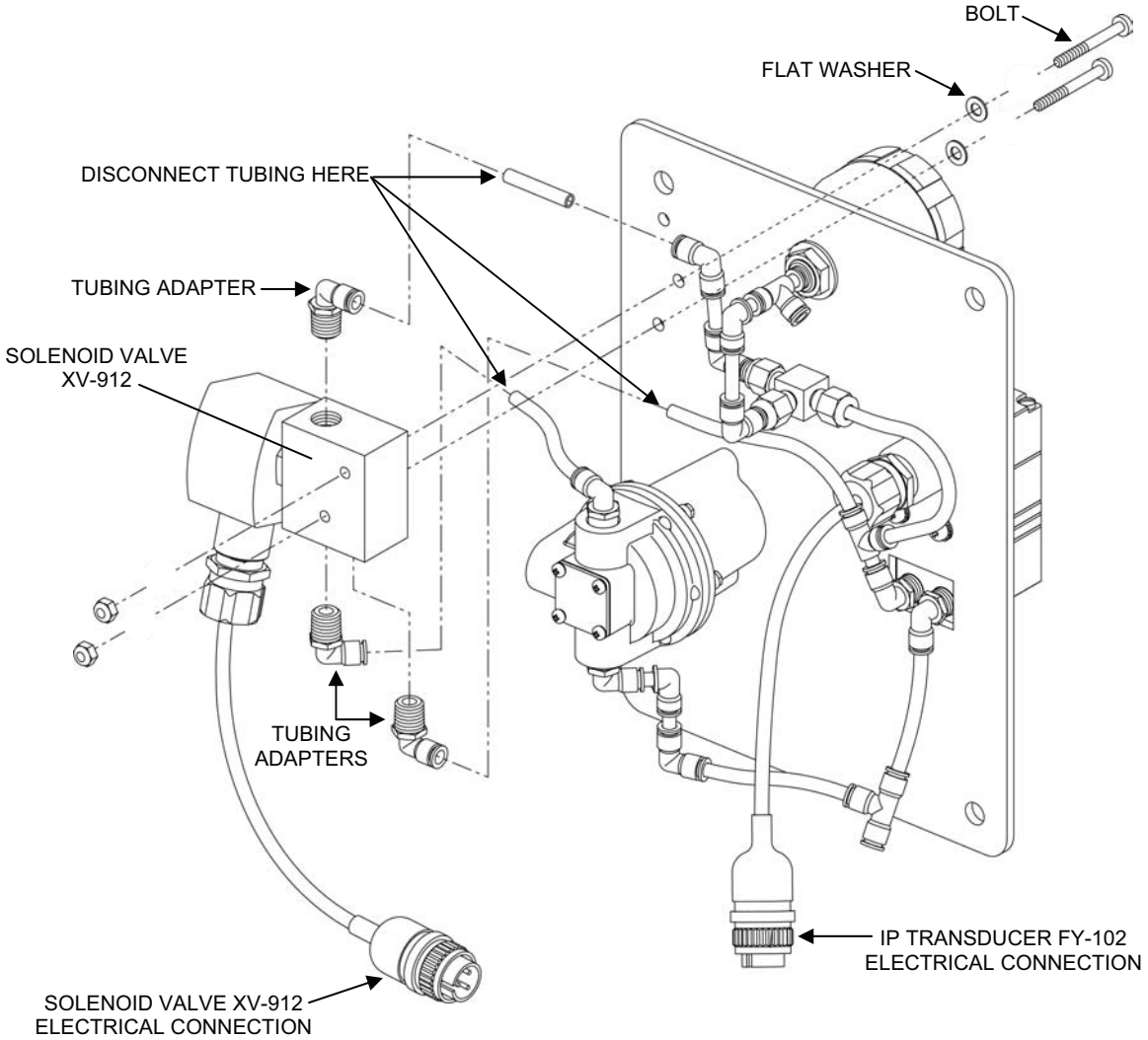

Figure 5. Three Way Solenoid Valve XV-912.

2. Install the three way solenoid valve onto the feed flow control panel assembly as follows:
   a. Apply antiseizing tape to the adapter threads.
   b. Install the adapters into the new solenoid valve in the same position they were in the old solenoid valve. Do not over-tighten.
   c. Mount the 3-way solenoid valve onto the feed flow control panel assembly using the 2 lock nuts, 2 flat washers, and 2 screws.
   d. Connect the 3 tubes that were disconnected from the old solenoid valve to the same adapters in the new solenoid valve.
   e. Reconnect the electrical connection to 3-Way Solenoid Valve XV-912
3. Check the feed flow control panel for proper operation and leaks.

Feed Control Selector Valve V-914 Replacement:

Parts:
Feed Control Selector Valve V-914 (TM 10-4610-309-23P)
Equipment Condition:
TWPS in Standby Shutdown Without Draining Down
Army TWPS: Generator off and TWPS main breaker off
Marine Corps TWPS: TWPS disconnected from power source

WARNING

The TWPS must be in Shutdown and the TQG and TWPS main breaker must be off (Army) or the TWPS disconnected from its power source (Marine Corps) prior to performing maintenance on the TWPS Air System. Failure to observe this warning can result in injury to personnel and damage to equipment.

High pressure. The air system contains air pressure up to 1800 psig. The air system must be bled prior to performing maintenance on components of the air system. Failure to observe this warning can result in injury to personnel and damage to equipment.

Replace Feed Control Selector Valve V-914 as follows:

1. Remove Feed Control Selector Valve V-914 from the feed flow control panel assembly as follows (see Figure 6):
    a. Bleed the air system. Refer to **AIR SYSTEM BLEED DOWN PROCEDURES**.
    b. Position the selector valve in the manual feed position.
    c. Disconnect the tubing from the selector valve.
    d. Loosen the setscrew on the selector knob and remove the selector knob.
    e. Remove the flat nut that holds the selector valve to the feed flow control panel and remove the selector valve.
    f. Loosen the ferrules on the selector valve and remove and retain the tubes from the valve.

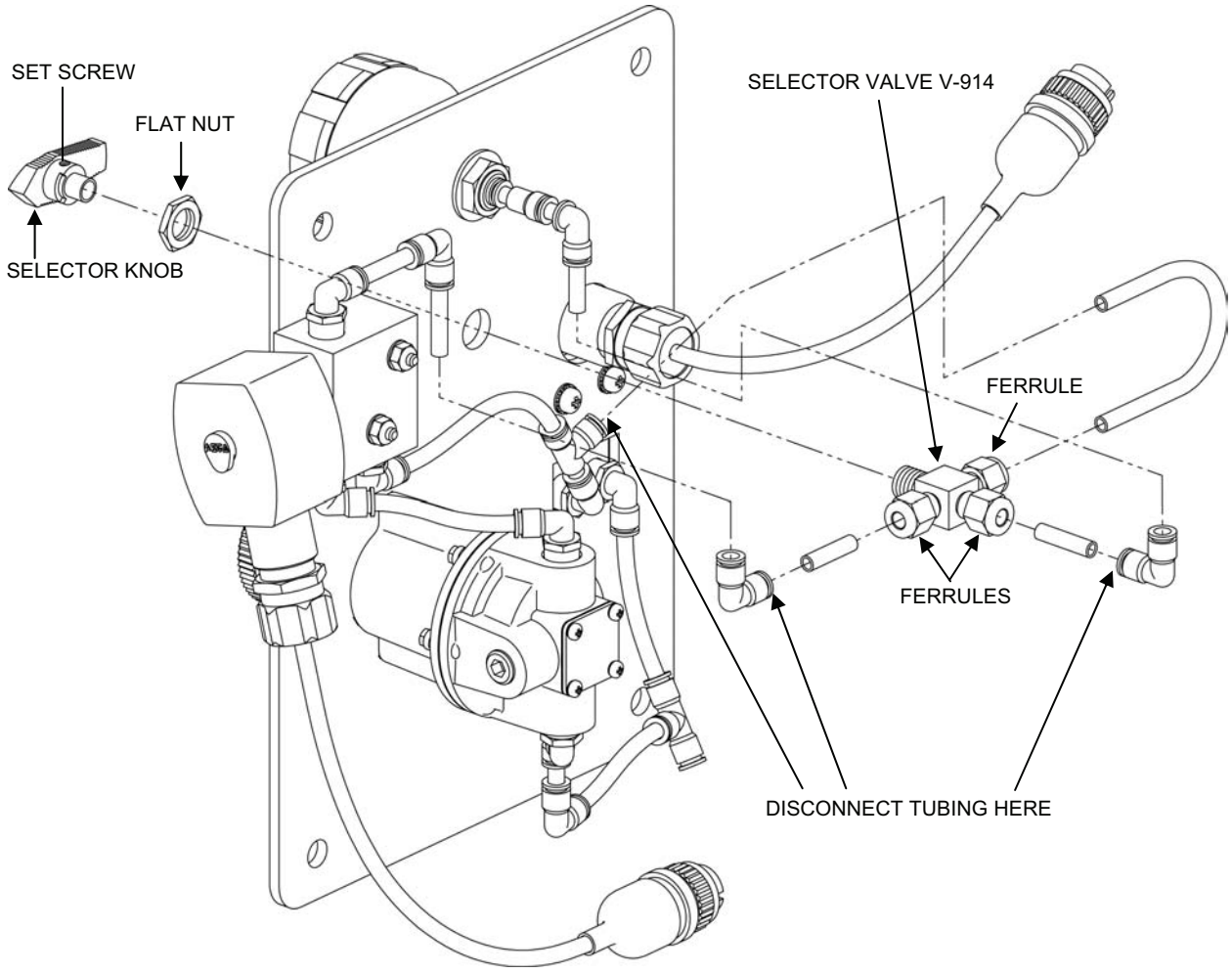

Figure 6. Feed Control Selector Valve V-914.

2. Install the new Feed Control Selector Valve V-914 to the feed flow control panel assembly as follows:
    a. Loosen the ferrules on the new selector valve. Insert the tubes that were removed from the old selector valve in the same ferrules in the new selector valve. Tighten the ferrules to secure the tubes. Do not over-tighten.
    b. Insert the selector valve through the panel and secure it to the panel with the flat nut.
    c. Install the selector knob to the selector stem and secure it with the setscrew. Make sure the knob is positioned in the manual feed position.
    d. Connect the 3 tubes that were disconnected earlier to their appropriate locations.
3. Check the feed flow control panel for proper operation and leaks.

Pressure Gauge 0-30 psig PI-904 Replacement:

Parts:
Pressure Gauge 0-30 psig PI-904 (TM 10-4610-309-23P)
Material:
Antiseizing tape (WP 0038, Table 1, item 49, 50)
Equipment Condition:
TWPS in Standby Shutdown Without Draining Down
Army TWPS: Generator off and TWPS main breaker off
Marine Corps TWPS: TWPS disconnected from power source

WARNING

The TWPS must be in Shutdown and the TQG and TWPS main breaker must be off (Army) or the TWPS disconnected from its power source (Marine Corps) prior to performing maintenance on the TWPS Air System. Failure to observe this warning can result in injury to personnel and damage to equipment.

High pressure. The air system contains air pressure up to 1800 psig. The air system must be bled prior to performing maintenance on components of the air system. Failure to observe this warning can result in injury to personnel and damage to equipment.

Replace Pressure Gauge PI-904 as follows:

1. Remove Pressure Gauge PI-904 from the feed flow control panel assembly as follows (see Figure 7):
   a. Bleed the air system. Refer to **AIR SYSTEM BLEED DOWN PROCEDURES**.
   b. Disconnect the tube from the panel mount connector.
   c. Remove the nut that holds the pressure gauge to the feed flow control panel and remove the pressure gauge.
   d. Remove the panel-mount connector from the gauge and clean the threads of the connector.

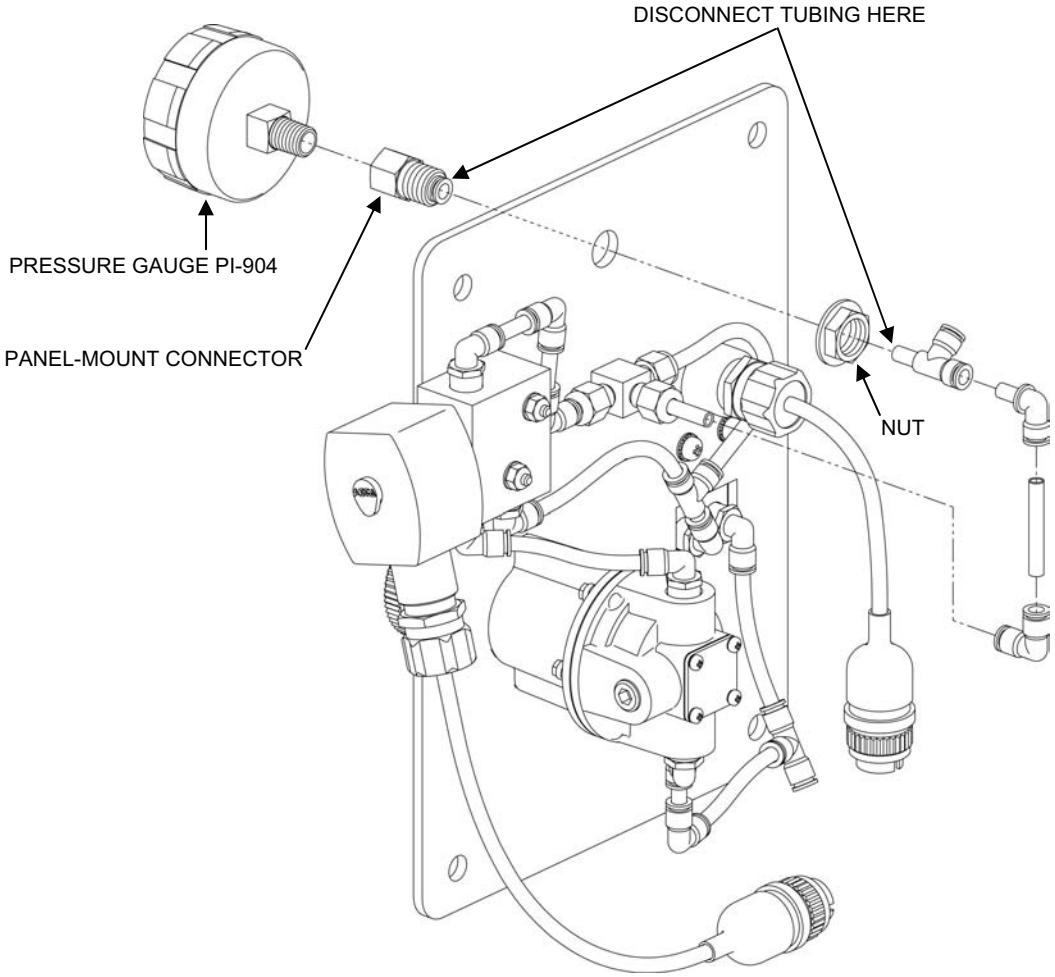

Figure 7. Pressure Gauge PI-904.

2. Install the new pressure gauge in the feed flow control panel assembly as follows:
    a. Apply antiseizing tape to the new pressure gauge threads and the panel-mount connector threads.
    b. Install the panel mount connector onto the threads of the new pressure gauge.
    c. Mount the new pressure gauge to the feed flow control panel assembly and secure it with the nut.
    d. Connect the tube that was disconnected from the pressure gauge to the connector on the new pressure gauge.
3. Check the feed flow control panel for proper operation and leaks.

END OF WORK PACKAGE

TACTICAL WATER PURIFICATION SYSTEM (TWPS) FIELD MAINTENANCE PROCEDURES CONTROL INSTRUMENTS

0023 00

THIS SECTION COVERS:
Replace, Check, Configure

INITIAL SETUP:

Maintenance Level
Field
Tools
Army: General Mechanic's Tool Kit (WP 0037)
Marine Corps: Common No. 1 Tool Set (WP 0037)
References:
Refer to TM 10-4610-309-23P for repair parts information
Personnel Required
One Maintainer
Equipment Condition
TWPS in Standby Shutdown Without Draining Down
Army TWPS: Generator off and TWPS main breaker off
Marine Corps TWPS: TWPS disconnected from power source

GENERAL:

This work package contains information and instructions for replacing common control instruments in a number of systems on the TWPS. The procedures covered in this work package include:

Panel-Mounted Flow Transmitter Replacement and Configuration:
- MF Feed Flow Transmitter FT-101
- RO Reject Flow Transmitter FT-401
- Product Flow Transmitter FT-501

Tee Mounted Flow Sensor Replacement:
- MF Feed Flow Element FE-101
- RO Reject Flow Element FE-401
- Product Flow Element FE-501

Flow Loop Status Check

Panel-Mounted Conductivity Transmitter Replacement and Configuration:
- Conductivity Indicating Transmitter CIT-501

Conductivity Sensor Replacement:
- Product Conductivity Element CE-501A
- Product Conductivity Element CE-501B

MF and RO System Indicator Replacement:
- MF Feed Pressure Indicator PI-101
- MF Filtrate Pressure Indicator PI-201
- RO Feed Tank Temperature Indicator TI-202
- RO Feed Pressure Indicator PI-202
- HPP Discharge Pressure Indicator PI-303
- RO Feed Pressure Indicator PI-304
- RO Reject Pressure Indicator PI-401
- RO Product Pressure Indicator PI-501

MF and RO Transmitter Replacement:
- MF Feed Pressure Transmitter PT-101
- MF Filtrate Pressure Transmitter PT-102
- RO Feed Tank Level Transmitter LT-201
- RO Feed Pressure Transmitter PT-201
- RO Feed Pressure Transmitter PT-302
- RO Feed (Filtrate) Temperature Transmitter TT-201

REPLACE

Panel-Mounted Flow Transmitter Replacement:

Parts:
GLI model Pro-Series Model F3 (TM 10-4610-309-23P)
Tools:
Electrical Tool Box
Equipment Condition:
TWPS in Standby Shutdown Without Draining Down
Army TWPS: Generator off and TWPS main breaker off
Marine Corps TWPS: TWPS disconnected from power source

Replacing any of the three panel-mounted flow transmitters listed below as follows:
- MF Feed Flow Transmitter FT-101
- RO Reject Flow Transmitter FT-401
- Product Flow Transmitter FT-501

WARNING

Electrical hazard. Army personnel: make sure that the generator is off and the TWPS main breaker is off before disconnecting and connecting transmitter electrical connections. Marine Corps personnel: make sure that the TWPS is disconnected from its power source before working on the transmitter. Failure to observe this warning could result in serious injury or death from electrical shock.

1. Remove the flow transmitter from the instrument/solenoid panel box as follows (see Figure 1):
   a. Hold the flow transmitter and remove the four screws on the front of the transmitter.
   b. Disconnect the DC input supply cable from the back of the transmitter (see Figure 2).
   c. Disconnect the sensor cable from the back of the transmitter (see Figure 2).
   d. Remove the flow transmitter, transmitter panel mount gasket and retainer plate from the transmitter panel.

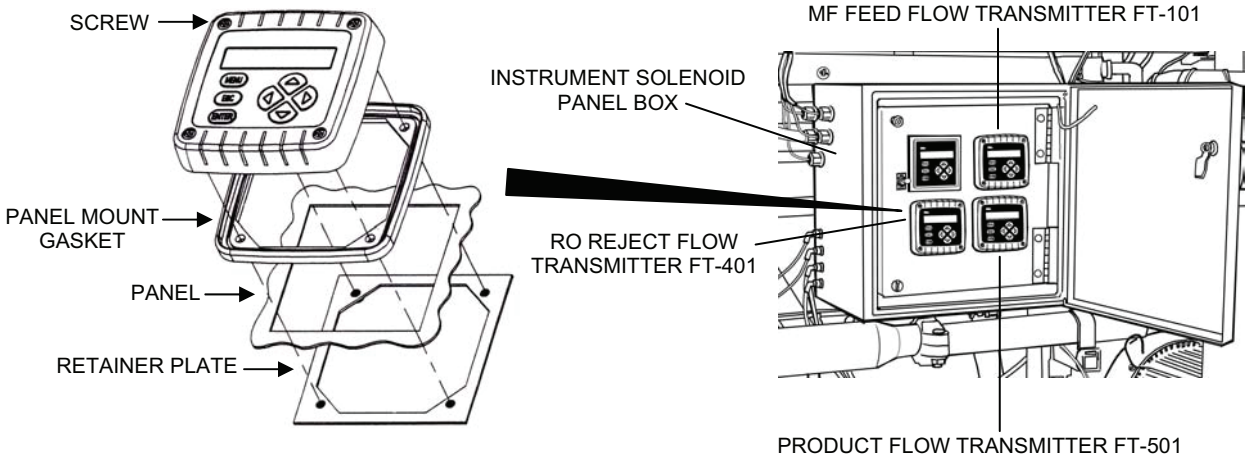

Figure 1. Flow Transmitter Removal.

2. Install the new flow transmitter to the instrument/solenoid panel as follows (see Figure 2):
   a. Put the DC input supply cable and sensor cable through the back of the retainer plate, transmitter panel, and the transmitter panel mount gasket.

NOTE

The terminal color code label on the back of the flow transmitter may not match the colors of the wires that are to be connected to the terminals. Follow the instructions below when connecting wiring to the flow transmitter terminals.

   b. Connect the sensor cable wiring to the new transmitter as follows:
      1. Black wire to terminal 1 of TB2.
      2. Red wire to terminal 2 of TB2.
      3. Shielded ground wire to terminal 3 of TB2.
   c. Connect the two wire DC input supply cable as follows:
      1. DC+ Positive to terminal 1 of TB1 (black wire)
      2. DC- Negative to terminal 4 of TB1 (red wire)
      3. Jumper across terminals 2 and 3 of TB1.
   d. Mount the transmitter to the transmitter panel using the four screws supplied with the transmitter.

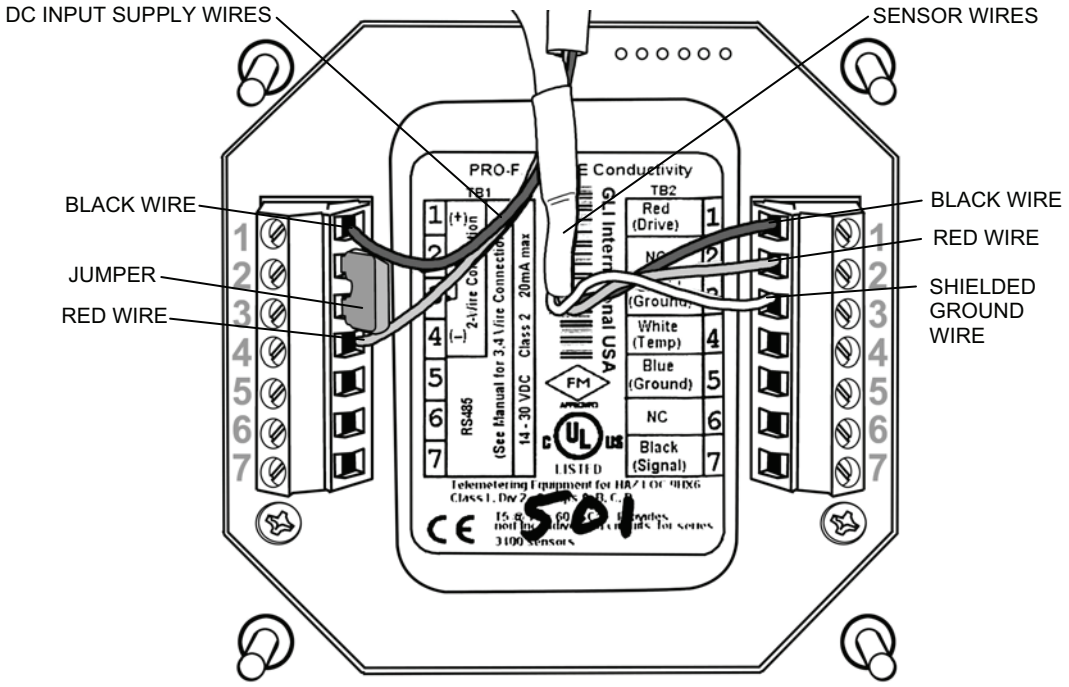

Figure 2. Flow Transmitter Wiring Terminal Designations.

3. Configure the flow transmitter with its associated sensor. Refer to **Flow Transmitter Configuration**.
4. Run the TWPS unit and check the transmitter for proper operation.

Panel-Mounted Flow Transmitter Configuration:

NOTE

The transmitter and the sensor that feeds information to the transmitter are configured using the following keys on the face of the transmitter (see Figure 3):

- **Enter key: Pressing this key does two things: It displays submenu and edit/selection screens, and it enters (saves) configuration values/selections.**
- **ESC key: Pressing this key always takes the display up on level in the menu tree. The ESC key can also "abort" the procedure to change a value or selection.**
- **Left and right arrow keys: Depending on the type of displayed screen, these keys do the following:**
  - **Measure Screen: At the Measure screen the left and right arrow keys change the readout (in a continuous loop sequence) to show different measurements.**
  - **Menu Screen: At the Menu screen the left and right arrow key are non-functional.**
  - **Edit/Selection Screens: At the Edit/Selection screens the left and right arrow keys move the cursor left or right in order to select digit for adjustment with up and down arrow keys.**
- **Up and down arrow keys: Depending on the type of displayed screen, these keys do the following:**
  - **Measure Screen: At the Measure screen the up and down arrow keys are non-functional.**
  - **Menu Screen: At the Menu screen the up and down arrow keys move the display up or down between other <u>same-level</u> menu screens.**
  - **Edit/Selection Screens: At the Edit/Selection screens the up and down arrow keys adjust the selected digit value up or down, or move up or down between choices.**

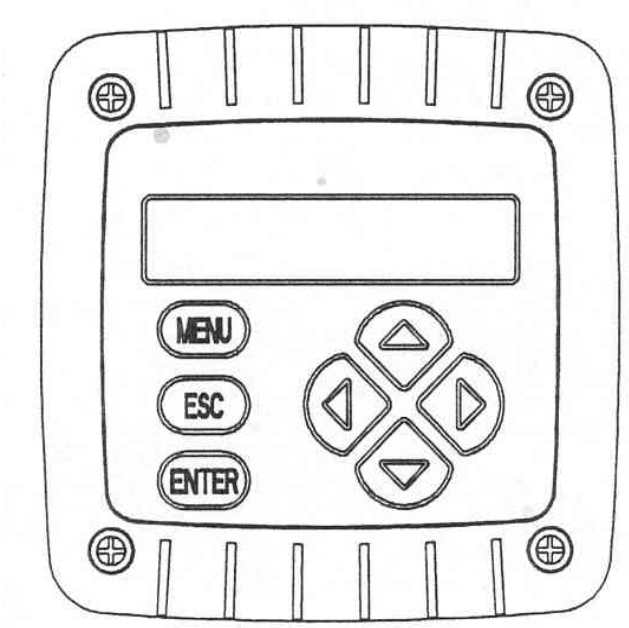

Figure 3. Transmitter Keypad.

Configure a flow transmitter with its sensor as follows:

1. Select the language to operate the transmitter:
    a. Press the **MENU** key to display a **"MAIN MENU"** screen.
    b. If the "**MAIN MENU/CONFIGURE"** screen is not showing, use the **up** and **down** arrow keys to display it.
    c. Press the **ENTER** key to display **Configure/Set Output**.
    d. Press the **down** arrow key until **Configure/Language** screen appears.
    e. This setting is factory default set to **English** so no entry is required.
2. Configure the sensor:
    a. Set the Multiplier (for displayed flow rate).
        1) With the **Configure/Language** screen displayed, press **down** arrow key once to display **Configure/Sensor**.
        2) Press the **ENTER** key to display **Sensor/Set Multiplier**.
        3) Press **ENTER** key again to display a screen like **Set Multiplier/(x100).**
        4) Use the **up** and **down** arrow keys **to select "x1"**.
        5) With **"x1"** selected press **ENTER** key to enter selection.
    b. Set the Decimal (for displayed flow rate).
        1) With the **Sensor/Set Multiplier** screen displayed, press the **down** arrow key once to display **Sensor/Set Decimal**.
        2) Press the **ENTER** key to display a screen like **Set Decimal/xxx.x**. Use the **up** and **down** arrow keys to select **"xxx.x".**
        3) With **"xxx.x"** selected press the **ENTER** key to enter this selection.
    c. Set the Filter Time.
        1) With the **Sensor/Set Decimal screen** displayed, press the **down** arrow key once to display **Sensor/Set Filter**.
        2) Press the **ENTER** key to display a screen like **Set Filter/0 Seconds**.
        3) Use the **up** and **down** arrow keys to adjust the displayed value to the desired filter time of **two (2) seconds** and press the **ENTER** key to enter the value.
    d. Select the Flow Units (for displayed flow rates).
        1) With the **Sensor/Set Filter** screen displayed, press the **down** arrow key once to display **Sensor/Flow Units**.
        2) Press the **ENTER** key to display a screen like **Flow Units/US GAL/MIN**.
        3) This setting is factory default to **US GAL/MIN.**
        4) Press the **ENTER** key to accept this selection.
    e. Select the Volume Units (for displayed volume).
        1) With the **Sensor/Flow** Units screen displayed, press the **down** arrow key once to display **Sensor/Volume Units**.
        2) Press the **ENTER** key to display a screen like **Volume Units/US GALLONS**.
        3) This setting is factory default to **US GALLONS.**
        4) Press the **ENTER** key to accept this selection
    f. Select the Enter Note (top line of Measurement screen).
        1) With the **Sensor/Volume Units** Screen displayed, press the **down** arrow key **three times** to display **Sensor/Enter Note.**
        2) Press the **ENTER** key to display **Enter Note/Flow**.
        3) This setting is factory default to **Flow.**
        4) Press the **ENTER** key to accept this selection

g. Select the Sensor Type.
   1) With the **Sensor/Enter Note** screen displayed. Press the **down** key once to display **Sensor/Select Sensor**.
   2) Press the **ENTER** key to display a screen like **Select Sensor/GLI PIPE MOUNT**.
   3) Use the **up** and **down** arrow keys to select the type of sensor and mounting arrangement for the transmitter according to the service as follows:
      a) FT-101: **GLI PIPE MOUNT**
      b) FT-401: **GLI PVDF T**
      c) FT-501: **GLI PVDF T**
   4) With the appropriate choice displayed, press the **ENTER** key to enter this selection.

h. Set the Sensor Data.

NOTE

If a sensor is replaced, always enter the new sensor's related configuration data. If the entered data does not match the sensor being used, measurement readings will be inaccurate. After selecting/entering sensor type, the Sensor/Select Sensor screen re-appears.

   1) Press the **down** arrow key once to display **Sensor/Set Sensor**. Pressing the **ENTER** key displays **Set Sensor/Set Pipe ID** (for FT-101) or **Tee Size** (for FT-401 and FT-501)
   2) **For FT-101 only.** With the **Set Sensor/Set Pipe ID** screen displayed, press the **ENTER** key to display a screen like **Set Pipe ID/(3.000 in.).** Use the arrow keys to adjust the display value to **3.314 in.** and press **ENTER** key to enter the value. (Right/left keys moves the curser. Up/down keys change the value of the number at the curser.)
   3) **For FT-401 and FT-501.** With the **Set Sensor/Set Pipe ID** screen displayed, press the **ENTER** key to display a screen like **Set Pipe ID/(3.000 in.).** Use the up/down arrow keys to adjust the display value to **2.0 in.** and press **ENTER** key to enter the value.

3. Configuring the Analog Output:
   a. Set the Parameter (representation)
      1) Press the **MENU** key to display a **"MAIN MENU"** screen.
      2) If the **MAIN MENU/Configure** screen is not showing use the **up** and **down** arrow keys to display it.
      3) Press the **ENTER** key to display **Configure/Set Output.**
      4) Press the **ENTER** key again to display **Set Output/Set Parameter.**
      5) Press the **ENTER** key again to display a screen like **Set Parameter/(Flow).**
      6) Use the **up** and **down** arrow keys to select desired choice **"FLOW"** press the **ENTER** key to enter this selection.
   b. Set the 4mA and 20mA Values (range expand)
      1) With the **Set Output/Set Parameter** screen displayed, press the **down** arrow key once to display **Set Output/Set 4mA Value**.
      2) Press the **ENTER** key to display a screen like **Set 4mA Value/(0.0 x 1GPM)**. Use the **arrow** keys to set a displayed value of **"ZERO"** at which 4mA is desired, and press the **ENTER** key to enter this value.
      3) After the **Set Output/Set 4mA Value** screen re-appears, press the **down** arrow key once to display **Set Output/Set 20ma Value**.

4) Press **ENTER** key to display a screen like **Set 20mA Value**. Use the **arrow** keys to set the display value as listed below. Press the **ENTER** key to enter the value.
   a) FT-101: **225**
   b) FT-401: **55**
   c) FT-501: **30**

c. Set the Fail Level Mode (off, 4 mA or 20 mA).
   1) Press the **down** arrow key <u>twice</u> to display **Set Output/Set Fail Level**.
   2) Press the **ENTER** key to display **Set Fail Level/(OFF).** Use the **up** and **down** arrow keys to select **"OFF"** as the desired choice, then press the **ENTER** key to enter this selection.

4. Set the Passcode (feature enabled or disabled).
   a. Press the **MENU** key to display the **MAIN MENU** screen.
   b. If the **MAIN MENU/Configure** screen is not showing, use the **up** and **down** arrow keys to display it.
   c. Press the **ENTER** key to display **Configure/Set Output**.
   d. Press the **down** arrow key <u>once</u> to display **Configure/Set Passcode**.
   e. Press the **ENTER** key to display **Set Passcode/Disabled**.
   f. The desired choice is **"Disabled",** Press the **ENTER** key to enter this selection.
   g. Press **Menu** and then **Esc** to return to the normal display screen.
5. The F3 Transmitter configuration is now complete.

Tee-Mounted Flow Sensor Replacement:

Parts:
Tee-Mount Flow Sensor F1A11 (TM 10-4610-309-23P)
Tools:
Electrical Tool Box
Material:
Valve seal lubricant (WP 0038, Table 1, item 30)
Five Gallon Bucket
Tie Wraps (BII)
Equipment Condition:
TWPS in Standby Shutdown With Drain-Down
Army TWPS: Generator off and TWPS main breaker off
Marine Corps TWPS: TWPS disconnected from power source

Replace any of the three tee-mounted flow sensors listed below as follows:
- MF Feed Flow Element FE-101
- RO Reject Flow Element FE-401
- Product Flow Element FE-501

WARNING

Electrical hazard. Army personnel: make sure that the generator is off and the TWPS main breaker is off before working on flow sensors. Marine Corps personnel: make sure that the TWPS is disconnected from its power source before working on flow sensors. Failure to observe this warning could result in serious injury or death from electrical shock.

NOTE

Make sure that the pipe connection where the flow sensor is to be removed has been depressurized and drained.

1. Make sure the TWPS is in Standby Shutdown with Drain-Down. Refer to WP 0013, TM 10-4610-309-10.
2. Remove a tee-mounted flow sensor as follows:

NOTE
Place a container under the sensor to catch any residual water.

a. Remove the locking pin holding the sensor in place, then remove the sensor from the process pipe (see Figure 4 for the location of the flow sensors).

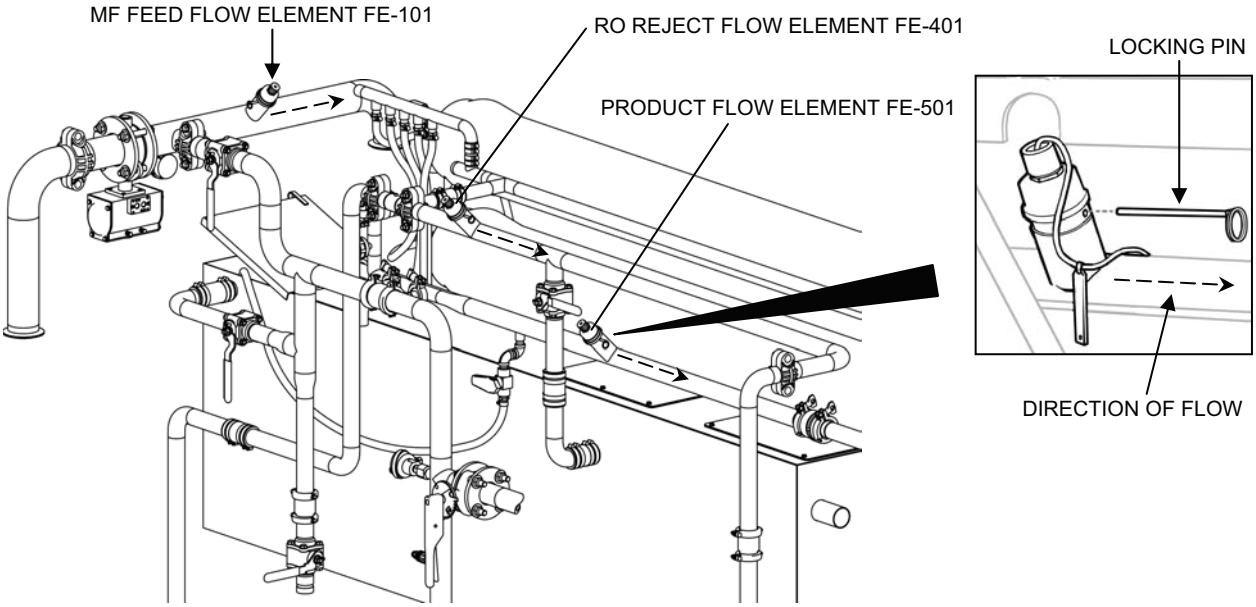

Figure 4. Tee-Mounted Flow Sensors.

3. Mark the sensor cable routing from the sensor to the transmitter in the Instrument/Solenoid Panel Box (see Figure 5 for the sensor and box locations).
    a. Cut the tie wraps that secure the sensor cable along it routing from the sensor to the transmitter.
    b. Unscrew the ring nut from the panel box that the cable runs through.
    c. Disconnect the transmitter sensor cable from the back of panel mounted flow transmitter. Refer to **REPLACE** and **Panel-Mounted Flow Transmitters**.
    d. Pull the wiring through the panel box and remove the sensor and its cabling.

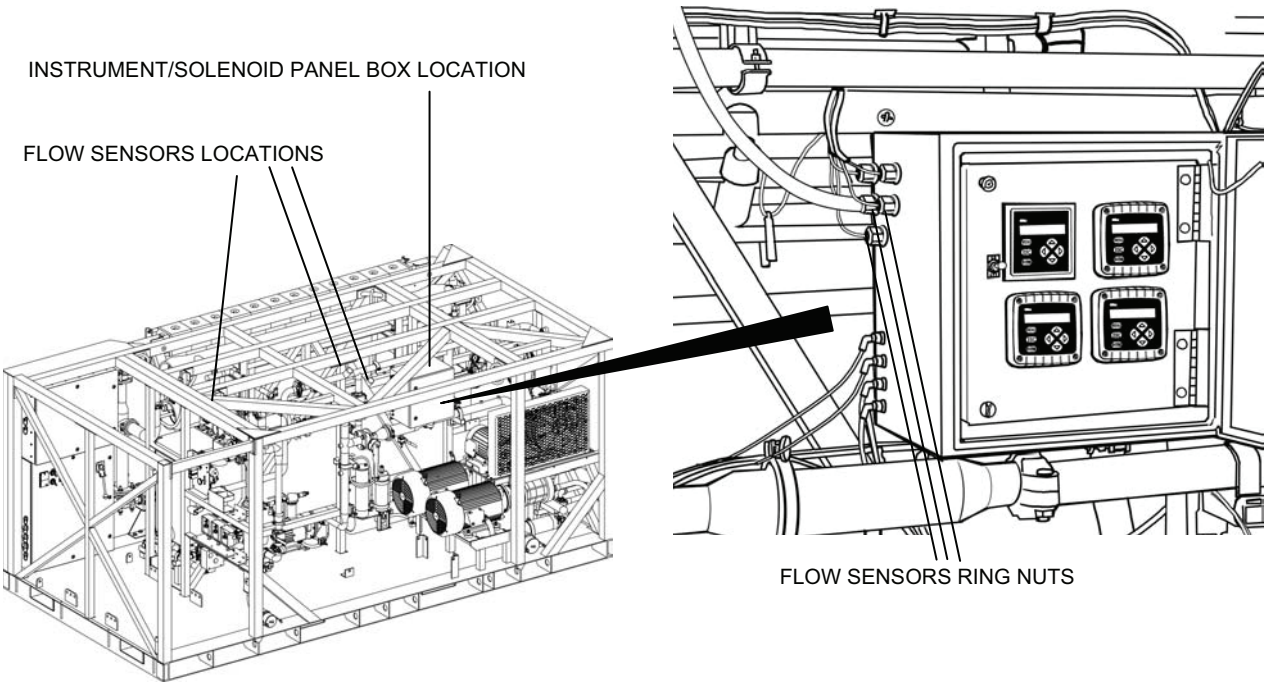

Figure 5. Flow Sensor and Instrument/Solenoid Panel Box Location.

4. Clean the area where the sensor mounts and inspect for any condition that could cause leakage.
5. Install the new flow sensor as follows:
    a. Place a small amount of valve seal lubricant on the two O-rings on the sensor to make installation into the tee mount easier.
    b. Install the sensor into the tee mount.
    c. Install the locking pin.
    d. Route the sensor cable along the cabling run that was marked earlier during removal and secure the sensor cable and other cabling in the run with tie wraps.
    e. Feed the cabling through the ring nut and panel box.
    f. Connect the new sensor cable to the transmitter. Refer to **REPLACE** and **Panel-Mounted Flow Transmitters**.
6. Run the TWPS and check for leaks and proper operation.

Flow Loop Status Check:

NOTE

The flow transmitter is designed so that you can check the operating status of the transmitter and the sensor. When the transmitter detects a "FAIL" diagnostic condition it will flash the "WARNING CHECK STATUS" message on the screen. By performing the flow loop status check, you can determine if the problem is with the transmitter or the sensor.

Perform the flow loop status check as follows:

1. Press the **MENU** key to display a **"MAIN MENU"** screen.
2. If the "**MAIN MENU TEST/MAINT"** screen is not showing, use the **up** and **down** arrow keys to display it.
3. Press the **ENTER** key to display **TEST/MAINT STATUS**.
4. Press the **ENTER** key again.
   a. If **STATUS: ANALYZER OK** appears, the transmitter is operating properly.
   b. If **FAIL** appears, replace the transmitter. Refer to **Panel-Mounted Flow Transmitter Replacement and Configuration**.
5. Press the **ENTER** key again.
   a. If **STATUS: SENSOR OK** appears, the sensor is operating properly.
   b. If **FAIL** appears, replace the sensor. Refer to **Tee-Mounted Flow Sensor Replacement**.
6. Press the **ESC** key or the **ENTER** key again to end status checking.

Panel-Mounted Conductivity Transmitter Replacement:

Parts:
GLI Model C33 Conductivity Analyzer (TM 10-4610-309-23P)
Tools:
Electrical Tool Box
Equipment Condition:
TWPS in Standby Shutdown Without Draining Down
Army TWPS: Generator off and TWPS main breaker off
Marine Corps TWPS: TWPS disconnected from power source

Replacing Conductivity Indicating Transmitter CIT-501 as follows:

WARNING

Electrical hazard. Army personnel: make sure that the generator is off and the TWPS main breaker is off before working on the transmitter. Marine Corps personnel: make sure that the TWPS is disconnected from its power source before working on the transmitter. Failure to observe this warning could result in serious injury or death from electrical shock.

1. Remove the conductivity indicating transmitter from the instrument/solenoid panel box as follows (see Figure 6):

a. Disconnect the AC power supply wiring module (TB1) from the back of the transmitter.
b. Disconnect the sensor shield wiring module (TB2) from the back of the transmitter.
c. Disconnect the sensor A and B wiring module (TB3) from the back of the transmitter.
d. Disconnect the relay wiring module (TB4) from the back of the transmitter.
e. Remove the two screws that hold the transmitter to the transmitter panel and pull the transmitter out the front of the panel.

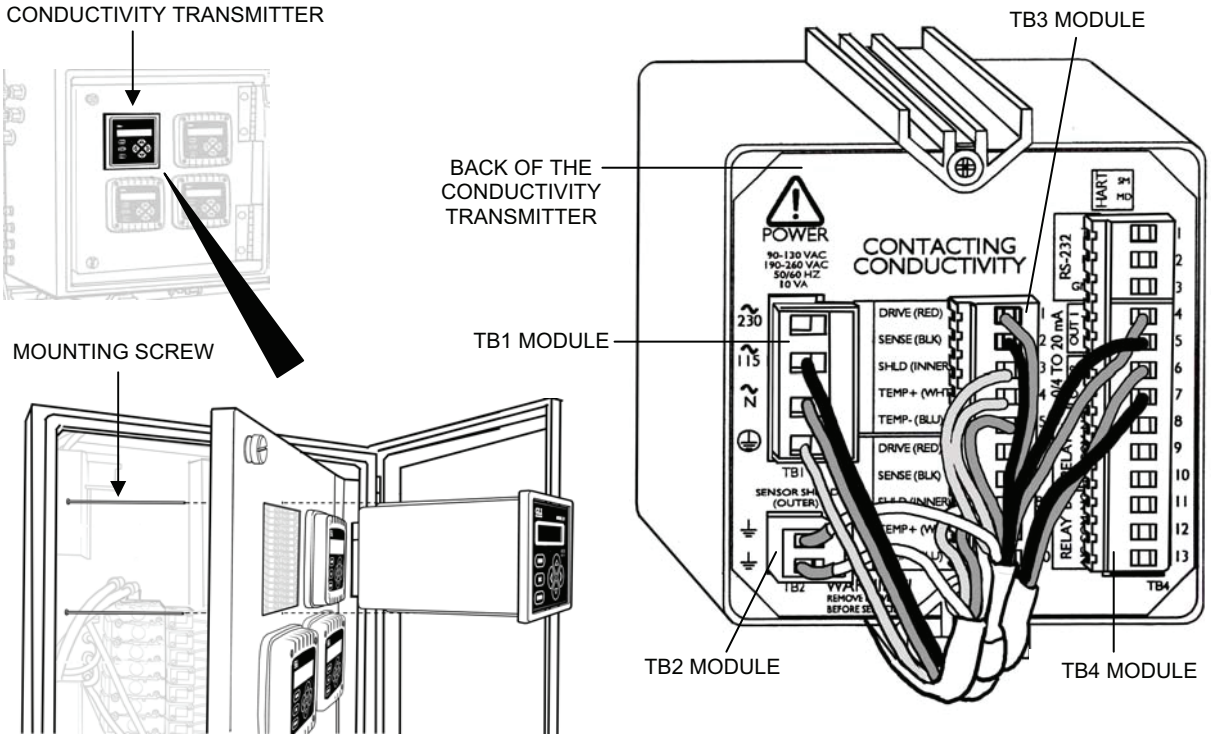

Figure 6. Panel-Mounted Conductivity Transmitter Removal.

2. Install the new conductivity transmitter to the transmitter panel as follows (see Figure 6):
   a. Insert the new conductivity transmitter in the panel and secure it with the two screws.
   b. Connect the relay wiring module to the TB4 terminals on the back of the new transmitter.
   c. Connect the sensor A and B wiring module to the TB3 terminals on the back of the new transmitter.
   d. Connect the sensor shield wiring module to the TB2 terminals on the back of the new transmitter.
   e. Connect the AC power supply wiring module to the TB1 terminals on the back of the new transmitter.
3. Configure the conductivity indicating transmitter and sensors A and B. Refer to **Conductivity Transmitter Configuration**.
4. Run the TWPS unit and check the transmitter for proper operation.

Panel-Mounted Conductivity Transmitter Configuration:

NOTE

The user interface consists of a two-line LCD display and keypad with MENU, ENTER, ESC, Left and Right and Up and Down Keys (see Figure 7).

The MEASURE Screen is normally displayed. Pressing the MENU Key temporarily replaces the MEASURE screen with the top-level MAIN Menu-CALIBRATE branch selection screen. Using the keypad, you can then display other screens to calibrate, configure or test the Transmitter.

If the keypad is not used within 30 minutes, except during calibration or while using specific Transmitter test/maintenance functions, the display will automatically return to the MEASURE screen.

To display the MEASURE screen at any time, press the MENU key once and then the ESC key once.

The Conductivity Transmitter KEY Pad:

- **MENU Key:**
  - **Pressing this key when the MEASURE screen is displayed shows the MAIN MENU-CALIBRATE screen. Then, to display the CONFIGURE or top-level main branch screen press the Down- key.**
  - **Pressing the MENU-key when a menu screen is displayed always shows the top-level screen in that branch.**
  - **(Pressing the MENU-key also "aborts" the procedure to change values or selections).**
- **ENTER key: Pressing this key does two things:**
  - **It displays submenu and edit/selection screens.**
  - **It enters (saves) configuration values/selections.**
- **ESC key:**
  - **Pressing this key always takes the display up one level in the menu tree.**
  - **The ESC key can also "abort" the procedure to change a value or selection.**
- **Left and Right arrow keys: Depending on the type of displayed screen, these keys do the following:**
  - **Measure Screen: At the Measure screen the left and right arrow keys change the readout (in a continuous loop sequence) to show different measurements.**
  - **Menu Screen: At the Menu screen the left and right arrow key are non-functional.**
  - **Edit/Selection Screens: Coarse adjusts the displayed numerical value.**
- **Up and down arrow keys: Depending on the type of displayed screen, these keys do the following:**
  - **Measure Screen: At the Measure screen the up and down arrow keys are non-functional.**
  - **Menu Screen: At the Menu screen the up and down arrow keys move up or down between other same-level menu screens.**
  - **Edit/Selection Screens: At the Edit/Selection screens the up and down arrow keys "Fine" adjust the displayed numerical value (holding key down changes value faster), or moves up or down between choices.**
- **Measure Screen:**

- **The measure screen can show seven different readout versions.**
- **The standard readout used for our configuration is shown in Figure 7.**
- **When the measure value is beyond the Transmitter's measuring range, series of "+" or "-" screen symbols appear respectively indicating that the value is above or below range.**

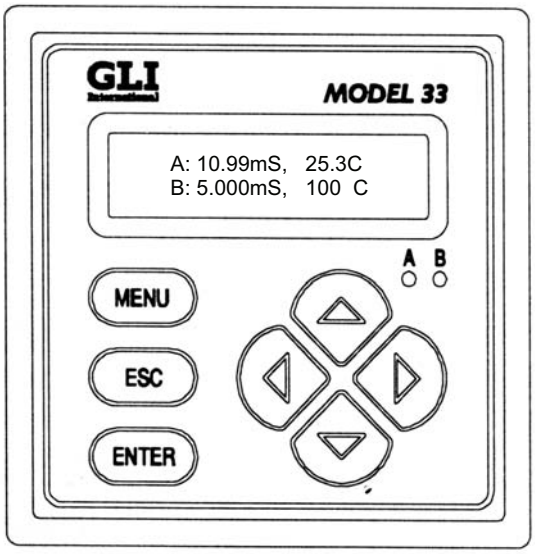

Figure 7. CIT-501 Conductivity RO Product Measure Screen Standard Configuration.

Configure the conductivity transmitter as follows:

1. Select the language to operate the transmitter:
   a. Press the MENU key to display a "MAIN MENU" screen.
   b. If the "MAIN MENU/CONFIGURE" screen is not showing, use the Up and Down arrow keys to display it.
   c. Press the ENTER key to display Configure/Set Output 1.
   d. Press the Down arrow key until Configure/Language screen appears.
   e. Press ENTER key to display a language like English.
   f. Use the Up or Down key to select "English" as the language.
   g. Press the ENTER key to enter the language selected.

NOTE

All listed sensor configuration instructions are for Sensor A. Configure Sensor B in the same way and with same values as Sensor A, except as listed in configuration step.

2. Select Measurement
   a. With the **Configure/Language** screen displayed, press the **Down key** once to display **Configure/Sensor A** (Press **Down Key** twice to display **Configure/Sensor B**).
   b. Press **ENTER key** to display **Sensor A/Select Measure.**
   c. Press **ENTER key** again to display a screen **Select Measure/(Conductivity)**.

d. Use the **Up** or **Down key** to select desired measurement **"Conductivity".**
e. Press the **ENTER key** to enter the selected measurement.

3. Select Display Format
   a. With the **Sensor A/Select Measure** screen displayed, press the **Down key** once to display **Sensor A/Display Format**.
   b. Press the **ENTER key** to display a screen like **Display Format/(200.0 us/cm).**
   c. Use the **Down** or **Up keys** to select a Display format .
      1) Conductivity For Sensor A ENTER: 200.0 us/cm
      2) Conductivity For Sensor B ENTER 2000 us/cm
   d. Press **ENTER key** to enter the selected display format.
4. Select Temperature Compensation
   a. With the **Sensor A/Display Format** screen displayed, press the **Down key** once to display **Sensor A/T-Compensation**.
   b. Press **ENTER key** to display a screen like **T-Compensation/Linear**.
   c. Use the **Down** and **Up keys** to select "**LINEAR**".
   d. Then press the **ENTER key** to enter the selection.
5. Select Config Linear
   a. With the **Sensor A/T-Compensation** screen displayed press the **Down key** until **Sensor A/Config Linear** screen appears.
   b. Press **ENTER key** to display **Config Linear/Set Slope**.
   c. Press **ENTER key** again to display a screen like **Set Slope/(2.00 %/°C)**.
   d. Use **Arrow keys** to adjust to a desired slope of **"2.00 %/ °C".**
   e. Press **ENTER key** to enter the slope.
   f. After the **Config Linear/Set Slope** screen re-appears, press the **Down key** once to display **Config Linear/Set Ref Temp**.
   g. Press **ENTER key** to display a screen like **Set Ref Temp/(25.0 °C)**.
   h. Use the **Arrow keys** to adjust to the desired reference temperature of **"25.0 °C".**
   i. Press the **ENTER key** to enter the reference temperature.
   j. After the **Config Linear/Set Ref Temp** screen re-appears, press **ESC key** once to return to the **Sensor A/Config Linear** Screen.
6. Select Cell K
   a. With the **Sensor A/Config Linear** screen displayed, press the **Down key** until **Sensor A/Cell Constant** screen appears.
   b. Press **ENTER key** to display **Cell Constant/Select Cell K**.
   c. Press **ENTER key** again to display a screen like **Select Cell K/ (0.05000)**.
   d. Use the **Down** and **Up keys** to select the nominal cell category that corresponds to the sensor's **GLI Certified "K" Value**.
      1) For **Sensor A** Enter **"0.05000"**
      2) For **Sensor B** Enter **"10"**
   e. Press **ENTER key** to enter the selected nominal cell category.
   f. After the **Cell Constant/Select Cell K** screen re-appears, press the **Down key** once to display **Cell Constant/Set Cell K**.
   g. Press **ENTER key** to display a screen like **Set Cell K/ (0.05000)**.
   h. Use the **Up** or **Down Arrow keys** to adjust the display value to **EXACTLY MATCH** the sensor's GLI certified "K" value listed on the Sensor cable.
   i. Press **ENTER key** to enter the certified "K" value.
   j. After the **Cell Constant/Set Cell K** screen re-appears, press **ESC key** once to return to the **Sensor A/Cell Constant** screen.

7. Set Filter Time
    a. With the **Sensor A/Cell Constant** screen displayed, press the **Down key** once to display **Sensor A/Set Filter**.
    b. Press the **ENTER key** to display a screen like **Set Filter/(0S)**.
    c. Use the **Arrow keys** to adjust to the desired filter time of **"2S".**
    d. Press **ENTER key** to enter the filter time.
8. Select Pulse Suppress (ON/OFF)
    a. With the **Sensor A/Set Filter** screen displayed, press the **Down key** once to display **Sensor A/Pulse Suppress**.
    b. Press the **ENTER key** to display a screen like **Pulse Suppress/ (ON)**.
    c. Use the **Down** and **Up keys** to select the pulse suppress mode of **"ON".**
    d. Press the **ENTER key** to enter pulse suppress mode.
9. Select Temp Element Type
    a. With the **Sensor A/Pulse Suppress** Screen displayed press the **Down key** twice to display **Sensor A/Temp Element**.
    b. Press **ENTER key** to display **Temp Element/Select Type**.
    c. Press **ENTER key** again to display a screen like **Select Type/(PT1000)**.
    d. Use the **Down** and **Up keys** to select **PT1000** as the type of temperature element used with the sensor to compensate the measurement.
    e. Press **ENTER key** to enter the selected temperature element.
10. Set T Factor (Sensor's GLI-certified "T" factor)
    a. With the **Temp Element/Select Type** screen displayed, press the **Down key** once to display **Temp Element/Set T Factor**.
    b. Press **ENTER key** to display a screen like **Set T Factor/(1000.0 OHMS)**.
    c. Use the **Arrow keys** to adjust the displayed value to **EXACTLY MATCH** the sensor's GLI certified T Factor listed on the cable
    d. Press **ENTER key** to enter certified T Factor.
    e. After the **Temp Element/Set T Factor** screen re-appears, press **ESC key** twice to return to the **Configure/Sensor A** screen.
11. Set °C or °F (temperature display format)
    a. With the **Configure/ Sensor A** screen displayed, press **UP key ONLY** twice until the **Configure/Set °C or °F** screen appears.
    b. Press **ENTER key** to display a screen like **Set °C or °F/(°C)**.
    c. Use the **Down and Up keys** to select the display temperature units **(°F)**.
    d. Press **ENTER key** to enter the selected display temperature units.
12. Set Parameter (These instructions configure Output 1. Configure Output 2 in the same way.)
    a. With the **Configure/Set °C or °F** screen displayed, press the **UP key ONLY** until **Configure/Set Output 1** appears.
    b. Press **ENTER key** to display **Set Output 1/Set Parameter**.
    c. Press **ENTER key** again to display a display screen like **Set Parameter/(Sensor A)**.
    d. Use the **Up** and **Down keys** to select the parameter the output will represent.
        1) **Output 1** Parameter **Sensor A**
        2) **Output 2** Parameter **Sensor B**
    e. Press **ENTER key** to enter the selected parameter.
13. Set 0/4mA and 20mA Values (range expand)
    a. With the **Set Output 1/Set Parameter** screen displayed, press **Down key** once to display **Set Output 1/Set 4mA Value**.
    b. Press **ENTER key** to display a screen like **Set 4mA Value/ (0.0 uS/cm)**.

c. Use the **Arrow keys** to set the value for which **0/4mA** is desired.
   1) For **Output 1 Sensor A** enter **0.0 uS/cm**
   2) For **Output 2 Sensor B** enter **0.0 uS/cm**
d. Press **ENTER key** to enter the desired value selected.
e. After the **Set Output 1 Set 4mA Value** screen re-appears, press **Down key** once to display **Set Output 1/Set 20mA Value**.
f. Press **ENTER key** to display a screen like **+++.+ uS/cm**.
g. Use **Arrow keys** (**Left** key **decreases** value and **Right** key **increases** value) to set value at which **20mA** is desired.
   1) For **Output 1 Sensor A** enter **100 uS/cm**
   2) For **Output 2 Sensor B** enter **2000 uS/cm**
h. Press **ENTER key** to enter the desired value selected.

14. Set Filter Time
    a. With the **Set Output 1/Set 20mA Value** Screen displayed Press **Down key** Twice to display **Set Output 1/Set Filter**.
    b. Press **ENTER key** to display a screen like **Set Filter/(0S)**.
    c. Use **Arrow keys** to adjust to a filter time of **"2S".**
    d. Press **ENTER key** to enter the selected filter time.
15. Set Scale 0mA/4mA(low end point
    a. With the **Set Output 1/Set Filter** screen displayed, press **Down key** once to display **Set Output 1/Scale 0mA/4mA**.
    b. Press **ENTER** key to display a screen like **Scale 0mA/4mA/(4mA)**.
    c. Use the **Down** and **Up keys** to select the minimum value of **"4mA"** for the analog output
    d. Press **ENTER key** to enter the selected minimum value.
16. Return to Measure Screen - Press the **MENU key** once and then the **ESC key** once.
17. Configuration Complete. Follow procedures for zeroing and calibration in (WP 0045 00, TM 10 4610-309-10).

Conductivity Sensor Replacement:

Parts (TM 10-4610-309-23P):
GLI Model 3455-Series Sanitary (CIP) Flange Style Conductivity Sensor
Gasket
Material:
Five Gallon Bucket
Tie Wraps
Tools:
Electrical Tool Box
Equipment Condition:
TWPS in Standby Shutdown With Drain-Down
Army TWPS: Generator off and TWPS main breaker off
Marine Corps TWPS: TWPS disconnected from power source

Replace either or both of the conductivity elements (sensors) listed below as follows:
- Product Conductivity Element CE-501A
- Product Conductivity Element CE-501B

WARNING

Electrical hazard. Army personnel: make sure that the generator is off and the TWPS main breaker is off before working on the conductivity elements. Marine Corps personnel: make sure that the TWPS is disconnected from its power source before working on the transmitter. Failure to observe this warning could result in serious injury or death from electrical shock.

NOTE

Make sure that the piping connection where the sensor is to be removed has been depressurized and drained.

1. Make sure the TWPS is in Standby Shutdown with Drain-Down. Refer to WP 0013, TM 10-4610-309-10.
2. Remove the sensor as follows:

NOTE

Place a bucket under the sensor to catch any liquid still in the piping system.

a. Remove the sanitary clamp and gasket that secure the sensor in the process pipe and pull the sensor out of the pipe (see Figure 8 for the location of the conductivity sensors).
b. Inspect the gasket for damage and replace if necessary.

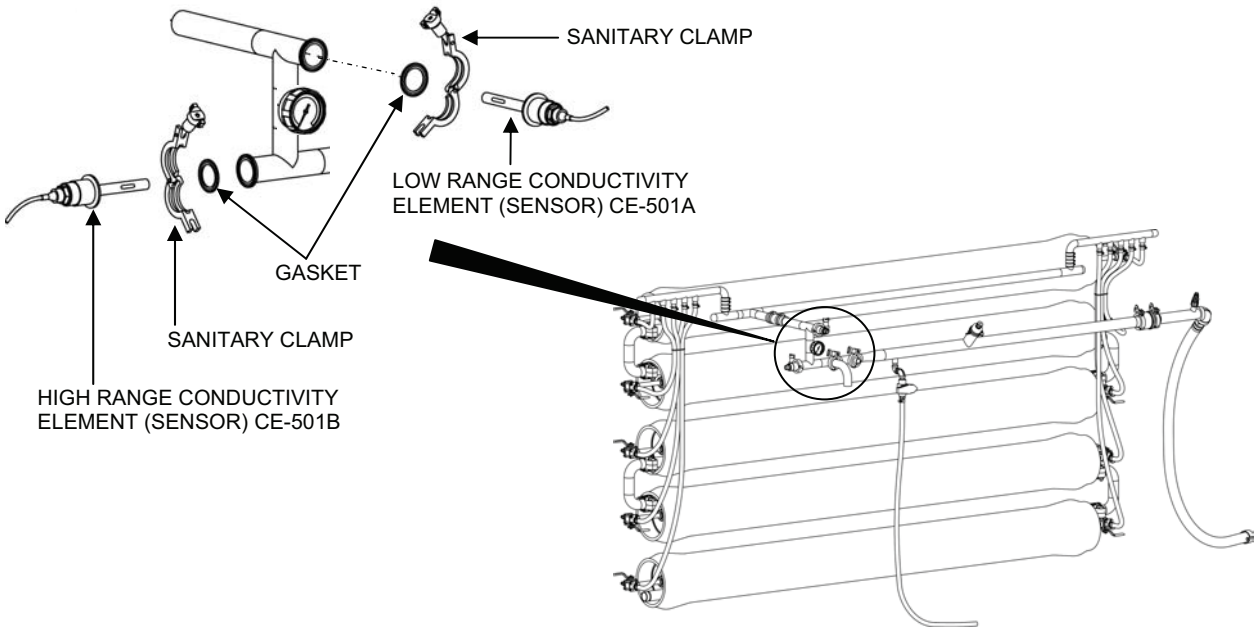

Figure 8. Conductivity Sensors Location.

c. Mark the sensor cable routing from the sensor to the transmitter in the Instrument/Solenoid Panel Box (see Figure 9 for the sensor and box locations).
d. Cut the tie wraps that secure the sensor cable along its routing from the sensor to the transmitter.
e. Unscrew the ring nut from the panel box that the cable runs through.

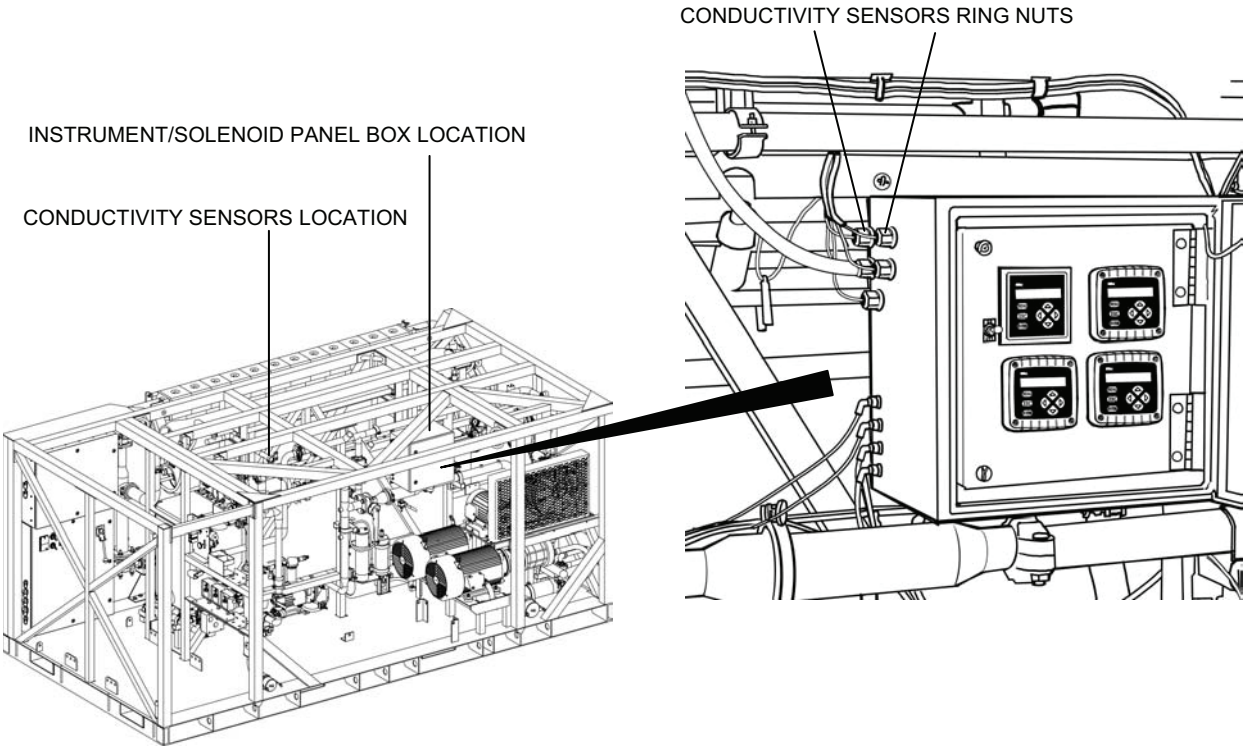

Figure 9. Conductivity Sensors and Instrument/Solenoid Panel Box Location.

f. Disconnect the sensor outer shield wire from module TB2 and the sensor red, black, inner shield, white, and blue wires from module TB3 at the back of the conductivity transmitter CIT-501 (see Figure 10).
g. Pull the wiring through the panel box and remove the sensor and its cabling.

3. Clean the area where the sensor mounts and inspect for any condition that could cause leakage.
4. Install the new conductivity sensor as follows:
   a. Position the gasket on the piping flange.
   b. Insert the new sensor into the piping and position it against the gasket.
   c. Secure the sensor and gasket to the flange using the sanitary clamp and tighten.
   d. Rout the sensor cabling back through the cabling run that was marked earlier during removal and secure the sensor cabling and the other cabling in the run with tie wraps.
   e. Feed the sensor cabling through the ring nut and panel box.

5. Connect the sensor wiring to the back of the transmitter as follows (see Figure 10):

CAUTION

Both conductivity sensors have two shield wires. One of the two shield wires has shrink tube near the end of the wire. This shield wire is the outer sensor shield wire and must be connected to the terminal at the TB2 module. If the two shield wires are not connected to their proper terminals, the conductivity sensor and transmitter may not function properly.

a. Outer shield wire (stranded wire with clear sheathing and a shrink tube near the end of the wire) to the open terminal on module TB2.
b. Red sensor wire to the TB3 module terminal labeled DRIVE (RED).
c. Black sensor wire to TB3 module terminal labeled SENSE (BLK).
d. Inner shield wire (stranded wire with clear sheating without a shrink tube) to the TB3 module terminal labeled SHLD (INNER).
e. White wire to the TB3 module terminal labeled TEMP+(WHT).
f. Blue wire to the TB3 module terminal labeled TEMP-(BLU).

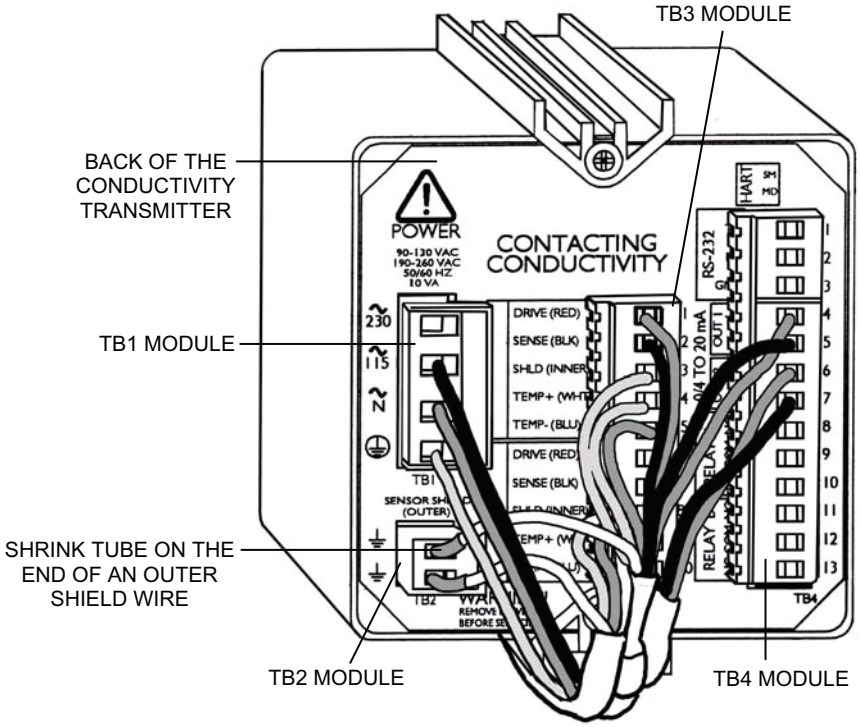

Figure 10. Conductivity Sensor Wiring Connections to the Conductivity Transmitter.

6. Configure the conductivity transmitter with the new conductivity sensor as described in **Conductivity Transmitter Configuration**.
7. Follow procedures for zeroing and calibration in (WP 0043 00, TM 10-4610-309-10).
8. Run the TWPS and check for leaks and proper operation.

MF and RO System Indicator Replacement:

Parts (TM 10-4610-309-23P):
- MF Feed Pressure Indicator PI-101
- MF Filtrate Pressure Indicator PI-201
- RO Feed Pressure Indicator PI-202
- HPP Discharge Pressure Indicator PI-301
- RO Feed Pressure Indicator PI-304
- RO Reject Pressure Indicator PI-401
- RO Product Pressure Indicator PI-501
- RO Feed Tank Temperature Indicator TI-202

Material:
Five Gallon Bucket
Antiseizing Tape (WP 0038, Table 1, item 52, 53)

Equipment Condition:
TWPS in Standby Shutdown With Drain-Down
Army TWPS: Generator off and TWPS main breaker off
Marine Corps TWPS: TWPS disconnected from power source

Replace any of the MF or RO System pipe-threaded pressure, temperature or flow indicators listed below as follows:
- MF Feed Pressure Indicator PI-101
- MF Filtrate Pressure Indicator PI-201
- RO Feed Pressure Indicator PI-202
- HPP Discharge Pressure Indicator PI-301
- RO Feed Pressure Indicator PI-304
- RO Reject Pressure Indicator PI-401
- RO Product Pressure Indicator PI-501
- RO Feed Tank Temperature Indicator TI-202

NOTE

Make sure that the piping where any of these indicators are to be removed has been depressurized and drained.

1. Make sure the TWPS is in Standby Shutdown with Drain-Down. Refer to WP 0013, TM 10-4610-309-10.
2. Remove the indicator as follows (see Figure 11 for the location and position of MF and RO system indicators):

NOTE

Note the direction of the front of the indicator is facing before removal to ensure that the new indicator faces in the same direction.

a. Where possible, place the five gallon bucket under the area where the indicator is to be removed to catch any leakage.
b. Remove the gauge.

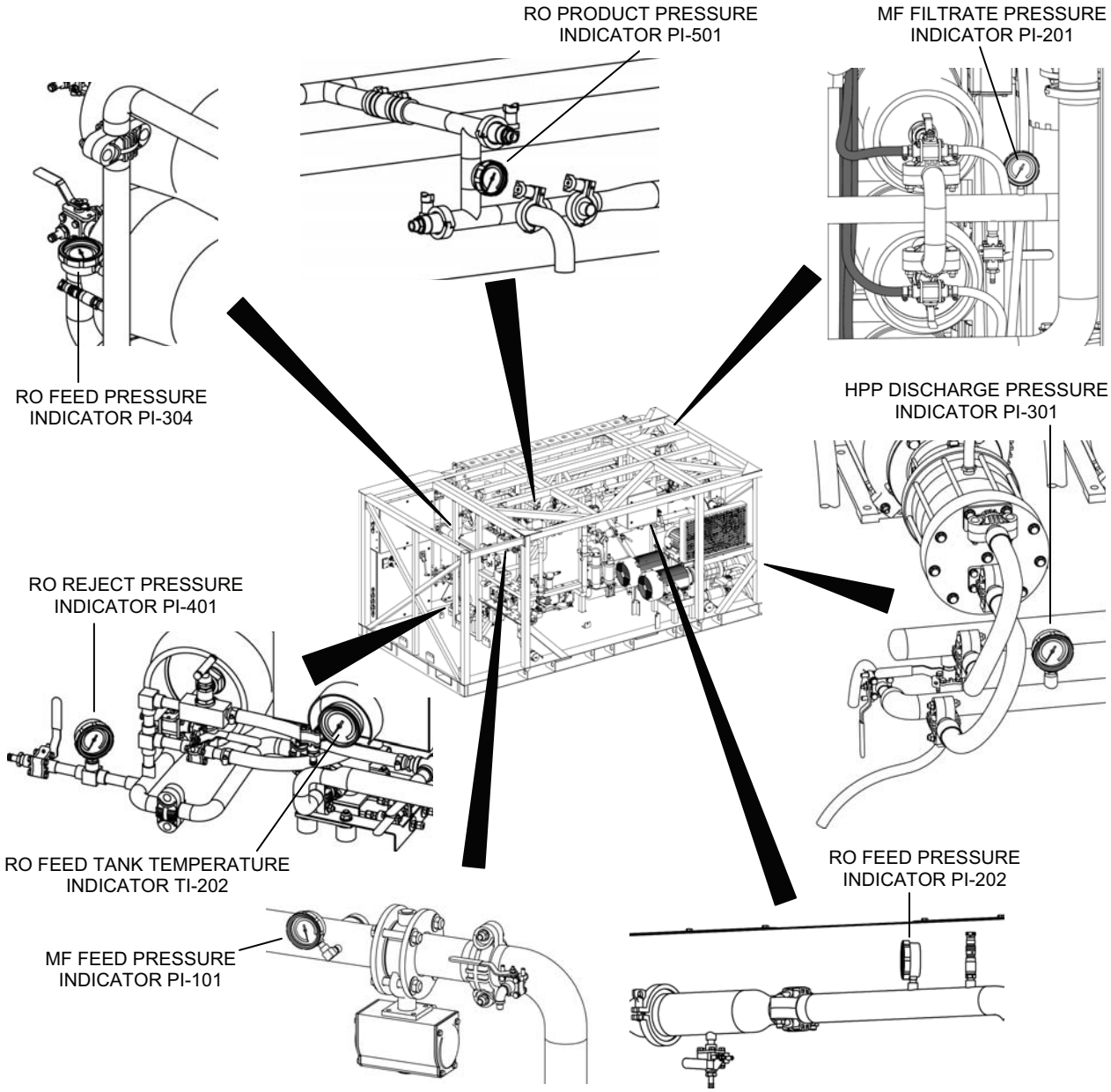

Figure 11. Location and Position of MF and RO System Indicators.

3. Clean the area where the indicator mounts and inspect for conditions that could cause leakage.
4. Wrap antiseizing tape on the gauge threads and thread the gauge into position.
5. Run the TWPS and check for leaks and proper operation.

MF and RO System Transmitter Replacement:

Parts (TM 10-4610-309-23P):
- MF Feed Pressure Transmitter PT-101
- MF Filtrate Pressure Transmitter PT-102
- RO Feed Tank Level Transmitter LT-201
- RO Feed Pressure Transmitter PT-201
- RO Feed Pressure Transmitter PT-302
- RO Feed (Filtrate) Temperature Transmitter TT-201

Material:
Five Gallon Bucket
Antiseizing Tape (WP 0038, Table 1, item 49, 50)

Equipment Condition:
TWPS in Standby Shutdown With Drain-Down
Army TWPS: Generator off and TWPS main breaker off
Marine Corps TWPS: TWPS disconnected from power source

Replace any of the MF or RO System Pipe threaded Pressure, Level, and Temperature Transmitters listed below as follows:
- MF Feed Pressure Transmitter PT-101
- MF Filtrate Pressure Transmitter PT-102
- RO Feed Tank Level Transmitter LT-201
- RO Feed Pressure Transmitter PT-201
- RO Feed Pressure Transmitter PT-302
- RO Feed (Filtrate) Temperature Transmitter TT-201

WARNING

Electrical hazard. Army personnel: make sure that the generator is off and the TWPS main breaker is off before working on a transmitter. Marine Corps personnel: make sure that the TWPS is disconnected from its power source before working on a transmitter. Failure to observe this warning could result in serious injury or death from electrical shock.

1. Make sure the TWPS is in Standby Shutdown with Drain-Down. Refer to WP 0013, TM 10-4610-309-10.
2. Remove the transmitter from the MF or RO system as follows (see Figure 12 for the location of the MF and RO system transmitters):
   a. Disconnect the electrical cable attached to the transmitter.

NOTE

Where possible, place a bucket under the transmitter that is to be removed to catch any excess fluid in the line.

   b. Remove the transmitter from the threaded pipe connection.

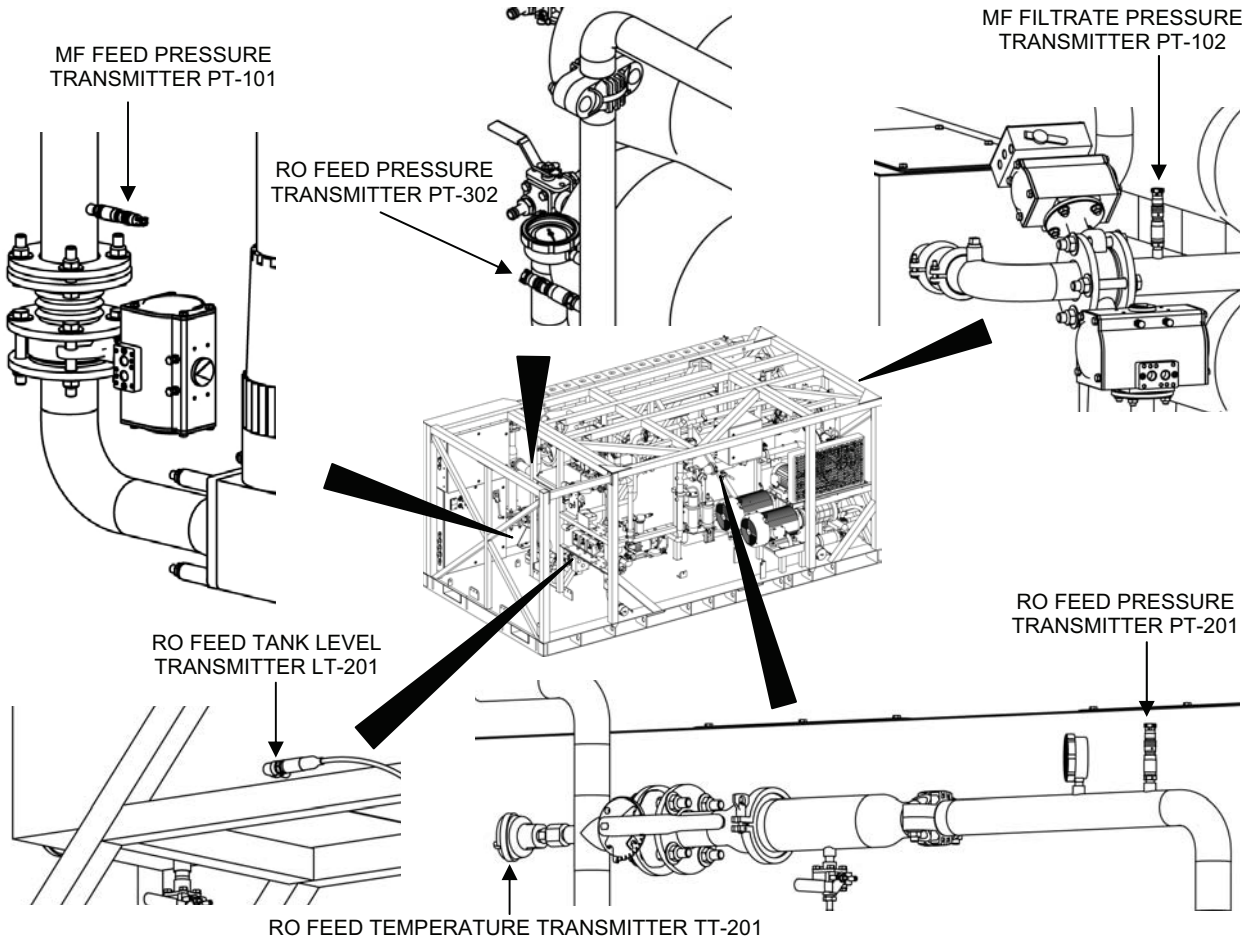

Figure 12. Location of MF and RO System Transmitters.

3. Clean the area around the removed transmitter and inspect the area for corrosion, cracks or other conditions that could cause the transmitter or pipe connection to leak or malfunction.
4. Install the new transmitter as follows:
   a. Wrap antiseizing tape on the transmitter threads and thread the transmitter into position.

NOTE

Be careful not to over-tighten the transmitter or back off the transmitter after tightening as this could weaken the pipe tape and cause leakage.

   b. Reconnect the electrical cable to the transmitter.
5. Operate the TWPS and check for leaks and proper operation.

END OF WORK PACKAGE

TACTICAL WATER PURIFICATION SYSTEM (TWPS) FIELD MAINTENANCE PROCEDURES POWER DISTRIBUTION SYSTEM

0024 00

THIS SECTION COVERS:
Replace

INITIAL SETUP:

Maintenance Level
Field
Tools
Army: General Mechanic's Tool Kit (WP 0037)
Marine Corps: Common No. 1 Tool Set (WP 0037)
References:
Refer to TM 10-4610-309-23P for repair parts information
Personnel Required
One Maintainer
Equipment Condition
TWPS in Standby Shutdown Without Draining Down
Army TWPS: Generator off and TWPS main breaker off
Marine Corps TWPS: TWPS disconnected from power source

GENERAL:

This work package contains information and instructions for replacing components of the Power Distribution System. The procedures covered in this work package include:

- Circuit Breaker With Auxiliary Switch Replacement
- Circuit Breaker Replacement
- GFI Module Replacement
- Contactor/Overload Relay/Surge Suppressor Replacement
- Contactor/Surge Suppressor Replacement
- Surge Arrester Replacement
- Surge Arrester Assembly Replacement
- Busbar Jumper Replacement
- Surge Suppressor Replacement
- Transformer Replacement
- 125 Amp Main Power Circuit Breaker Replacement
- Distribution Block Replacement
- Power Connector Replacement
- Light Outlet Replacement
- Utility Outlet Replacement
- Light Switch Replacement
- Main Circuit Breaker Handle Replacement

REPLACE

Circuit Breaker with Auxiliary Switch Replacement:

Parts (TM 10-4610-309-23P):
- Circuit Breaker, 10 amp 3 pole
- Circuit Breaker, 16 amp 3 pole
- Circuit Breaker, 63 amp 3 pole
- Circuit Breaker, 20 amp 3 pole
- Auxiliary Switch

Equipment Condition:
- TWPS in Standby Shutdown Without Draining Down
- Army TWPS: Generator off and TWPS main breaker off
- Marine Corps TWPS: TWPS disconnected from power source

Replace a circuit breaker with an auxiliary switch on the power distribution panel as follows:

WARNING

Electrical hazard. Army personnel: make sure that the generator is off and the TWPS main breaker is off before working on the control panel. Marine Corps personnel: make sure that the TWPS is disconnected from its power source before working on the control panel. Failure to observe this warning could result in serious injury or death from electrical shock.

NOTE

Check the model number on the old and replacement Circuit Breakers. All replacement circuit breakers are a model S203. If the old model number starts with S263, the auxillary switch must also be replaced. Follow the steps as noted below. The –Dxx number must be the same for both circuit breakers.

1. Remove a circuit breaker with an auxiliary switch as follows (see Figure 1):
   a. Open the power distribution panel and locate the circuit breaker to be replaced.
   b. Remove wire duct covers above and below circuit breaker.
   c. Tag the wires attached to the circuit breaker and the attached auxiliary switch.
   d. Loosen the screw terminal connections and remove the connecting wires.
   e. Using a flat-tip screwdriver, insert it into the DIN rail holding clip at the bottom of the circuit breaker. Gently pry down on the holding clip with the screwdriver to release the clip from the DIN rail. Then lift up on the breaker and remove it from the DIN rail.
   f. If the old circuit breaker is an S203 model follow the steps below
      i. Set the circuit breaker to the “Off” position.
      ii. With a small screwdriver, lift the triangular tabs on the auxiliary switch and separate it from the circuit breaker. Retain the auxiliary switch for reuse.

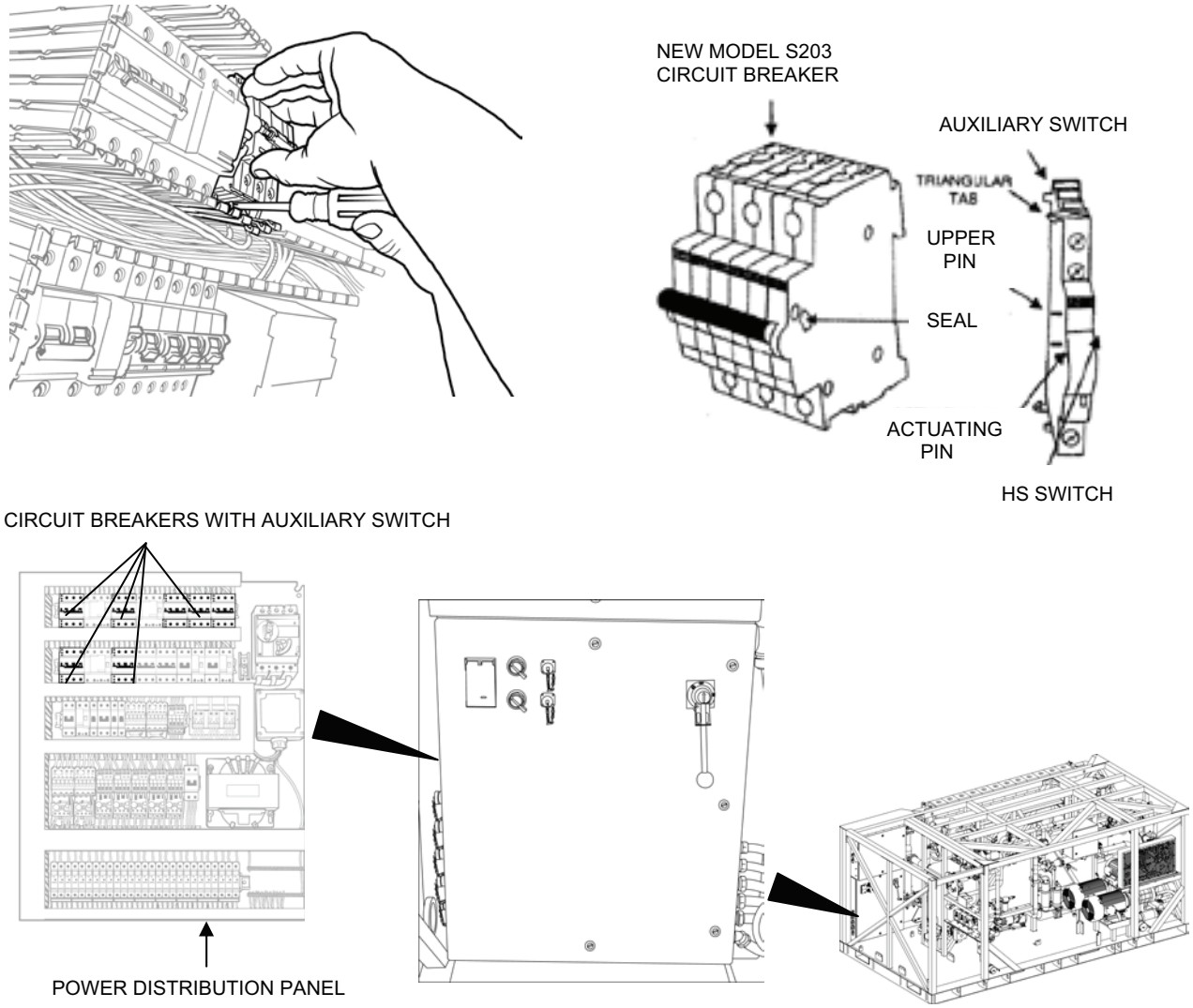

Figure 1. Circuit Breaker with Auxiliary Switch Replacement.

2. Install a new model S203 circuit breaker and auxiliary switch as follows (see Figure 1):
   a. Set the new circuit breaker to the ON position and remove the seal on the right side.
   b. If using a new auxiliary switch:
      1) Remove the upper (F200) pin.
      2) Rotate the actuating pin up (ON position).
      3) Set the H/S switch on the right side to the H position with a small screwdriver.
   c. Snap the auxiliary switch into place on the side of the circuit breaker.
   d. Position the circuit breaker on the DIN Rail and carefully press the circuit breaker in place.
   e. Attach the wires to the screw connections in accordance to the wire tags.

Note

When replacing an S263 circuit breaker with an S203, the common red 300 series wire will need to be butt spliced and routed to the bottom of the auxiliary switch.

f. Tighten the screw connections to secure the wires.
g. Remove the wire tags if necessary.
h. Reinstall the wire duct covers.
i. Close the power distribution panel.

Circuit Breaker Replacement:

Parts (TM 10-4610-309-23P):
Circuit Breaker, 25 amp 3 pole
Circuit Breaker, 16 amp 2 pole
Circuit Breaker, 2 amp 1 pole
Circuit Breaker, 4 amp 2 pole
Circuit Breaker, 8 amp 1 pole
Circuit Breaker, 4 amp 1 pole
Circuit Breaker, 20 amp, 3 pole
Equipment Condition:
TWPS in Standby Shutdown Without Draining Down
Army TWPS: Generator off and TWPS main breaker off
Marine Corps TWPS: TWPS disconnected from power source

Replace a circuit breaker on the power distribution panel as follows:

WARNING

Electrical hazard. Army personnel: make sure that the generator is off and the TWPS main breaker is off before working on the control panel. Marine Corps personnel: make sure that the TWPS is disconnected from its power source before working on the control panel. Failure to observe this warning could result in serious injury or death from electrical shock.

NOTE

Make sure to obtain the correct type of Circuit Breaker before replacing.

1. Remove a circuit breaker as follows (see Figure 2):
   a. Open the power distribution panel and locate the circuit breaker to be replaced.
   b. Remove wire duct covers above and below the circuit breaker.
   c. Tag the wires attached to the circuit breaker.
   d. Loosen the two screw terminal connections and remove the connecting wires.
   e. Using a flat-tip screwdriver, insert it into the DIN rail holding clip at the bottom of the circuit breaker. Gently pry down on the holding clip with the screwdriver to release the clip from the DIN rail. Then lift up on the breaker and remove it from the DIN rail.

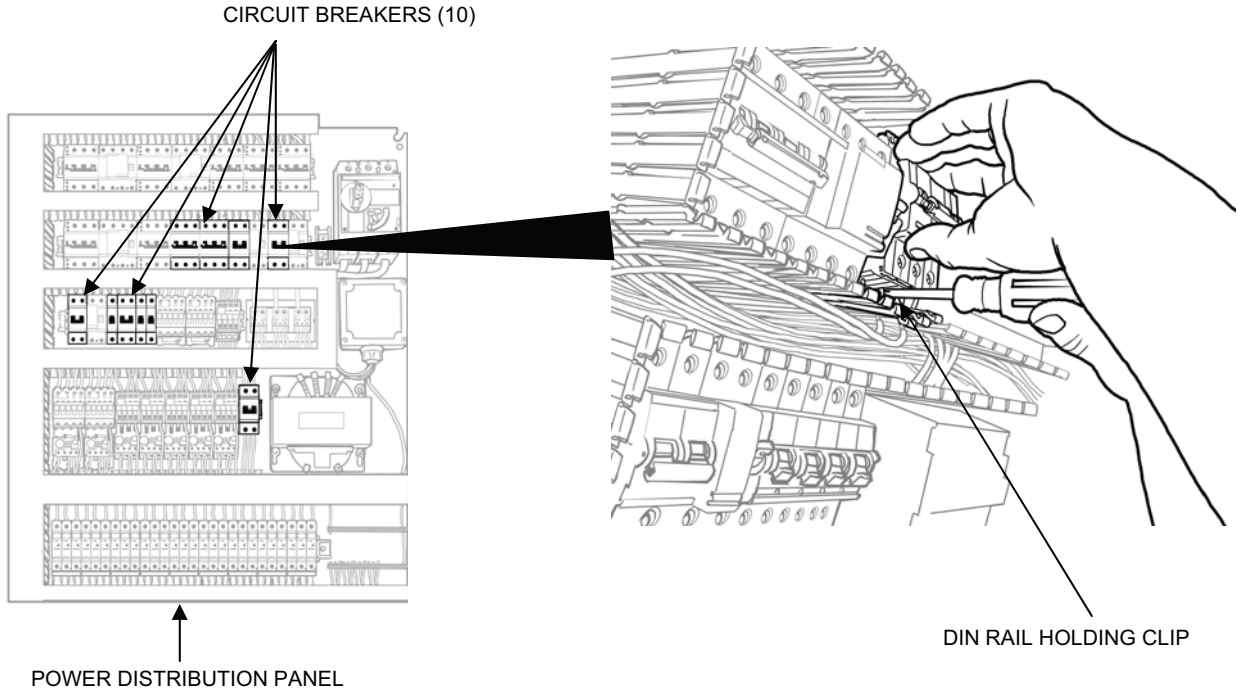

Figure 2. Circuit Breaker Replacement.

2. Install a new circuit breaker as follows:
    a. Position the new circuit breaker on the DIN rail and carefully press the circuit breaker in place.
    b. Attach the wires to the screw connections in accordance to the wire tags.
    c. Tighten the screw connections to secure the wires.
    d. Remove the wire tags if necessary.
    e. Reinstall the wire duct covers.
    f. Close the power distribution panel.

GFI Module Replacement:

Parts (TM 10-4610-309-23P):
GFI Module, 4 pole, 300ma
GFI Module, 2 pole, 30ma
Equipment Condition:
TWPS in Standby Shutdown Without Draining Down
Army TWPS: Generator off and TWPS main breaker off
Marine Corps TWPS: TWPS disconnected from power source

Replace a GFI module on the power distribution panel as follows:

WARNING

Electrical hazard. Army personnel: make sure that the generator is off and the TWPS main breaker is off before working on the control panel. Marine Corps personnel: make sure that the TWPS is disconnected from its power source before working on the control panel. Failure to observe this warning could result in serious injury or death from electrical shock.

NOTE
Make sure to obtain the correct type of GFI module before replacing.

1. Remove a GFI module as follows (see Figure 3):
   a. Open the power distribution panel and locate the GFI module to be replaced.
   b. Remove wire duct covers above and below the GFI module.
   c. Tag the wires attached to the GFI module.
   d. Loosen the two screw terminal connections and remove the connecting wires.
   e. Using a flat-tip screwdriver, insert it into the DIN rail holding clip at the bottom of the circuit breaker. Gently pry down on the holding clip with the screwdriver to release the clip from the DIN rail. Then lift up on the breaker and remove it from the DIN rail.

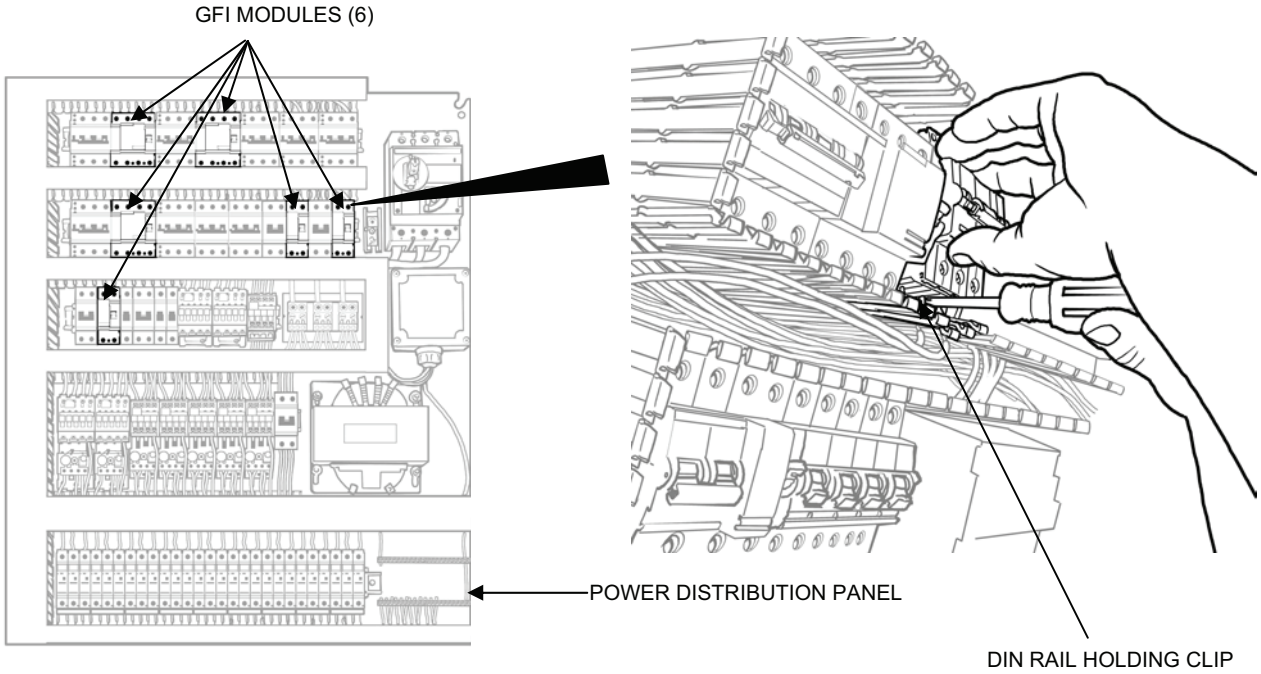

Figure 3. GFI Module Replacement.

2. Install a new GFI module as follows:
    a. Position the new GFI module on the DIN rail and carefully press the GFI module in place.
    b. Attach the wires to the screw connections in accordance to the wire tags.
    c. Tighten the screw connections to secure the wires.
    d. Remove the wire tags if necessary.
    e. Reinstall the wire duct covers.
    f. Close the power distribution panel.

Contactor/Overload Relay / Surge Suppressor Replacement:

Parts (TM 10-4610-309-23P):
Contactor, 3 pole, 5 HP
Contactor, 3 pole, 7 1/2 HP
Contactor, 3 pole, 20 HP
Overload Relay, Adjustable, 28 - 42 amp
Overload Relay, Adjustable, 4.5 - 6.5 amp
Overload Relay, Adjustable, 10 - 14 amp
Overload Relay, Adjustable, 6 - 8.5 amp
Surge Suppressor, 120vac
Equipment Conduction:
TWPS in Standby Shutdown Without Draining Down
Army TWPS: Generator off and TWPS main breaker off
Marine Corps TWPS: TWPS disconnected from power source

Replace a contactor/overload relay/suppressor assembly on the power distribution panel as follows:

WARNING

Electrical hazard. Army personnel: make sure that the generator is off and the TWPS main breaker is off before working on the control panel. Marine Corps personnel: make sure that the TWPS is disconnected from its power source before working on the control panel. Failure to observe this warning could result in serious injury or death from electrical shock.

NOTE

Make sure to obtain the correct type of contactor/overload relay/suppressor before replacing.

1. Remove a contactor/overload relay/suppressor assembly as follows (see Figure 4):
    a. Open the power distribution panel and locate the contactor assembly to be replaced.
    b. Tag the wires attached to the contactor assembly.
    c. Loosen the screw terminal connections and remove the connecting wires.
    d. Loosen the three terminal screws connecting the overload relay to the contactor. Separate the overload relay from the contactor.

e. Using a flat-tip screwdriver, insert it into the DIN rail holding clip at the bottom right side of the contactor. Gently pry down on the holding clip with the screwdriver to release the clip from the DIN rail. Then lift up on the contactor and remove it from the DIN rail.
f. Remove the contactor assembly from the DIN rail.
g. Remove the surge suppressor clip from the contactor.

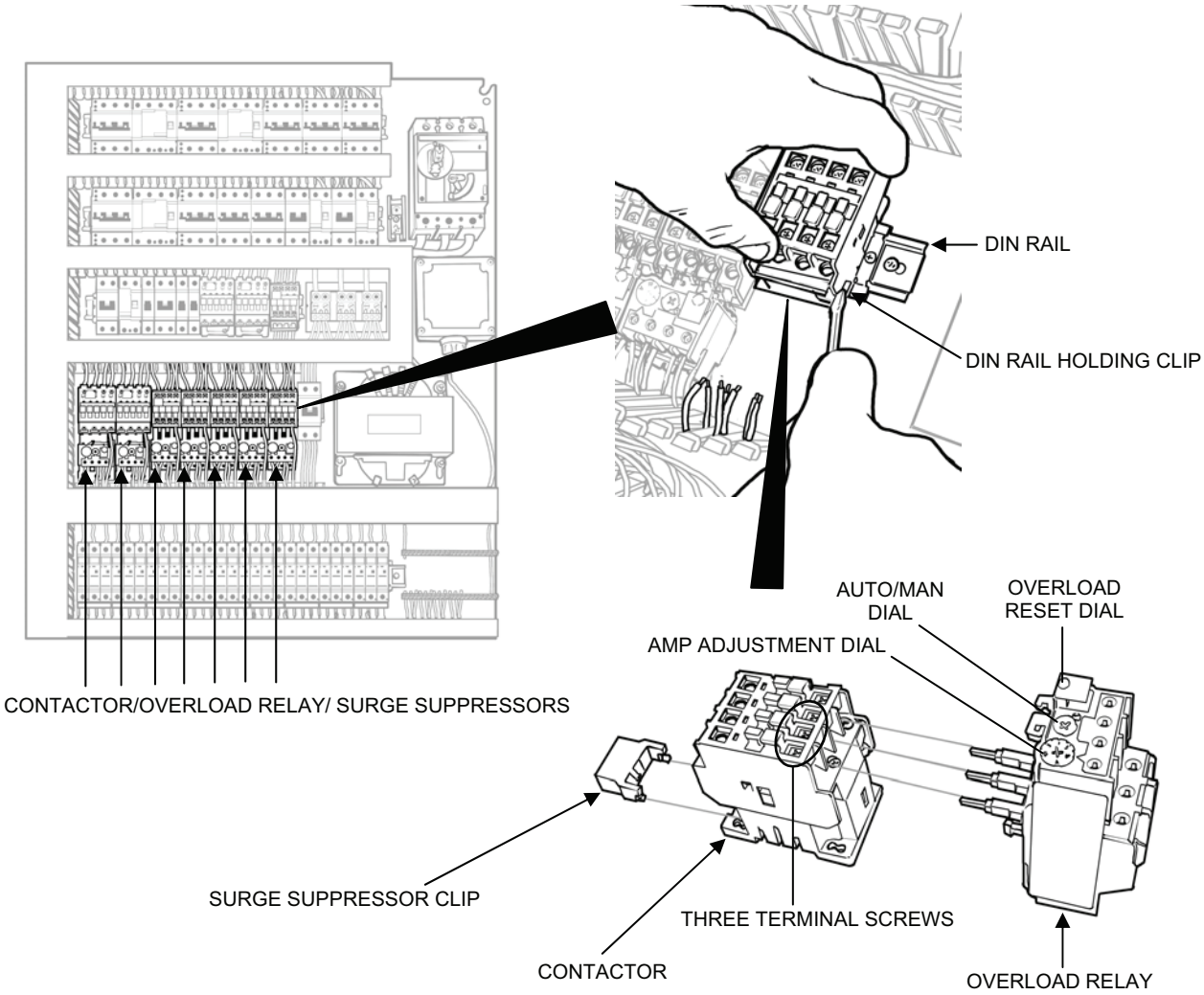

Figure 4. Contactor/Overload Relay/Surge Suppressor Assembly Replacement.

2. Install a new contactor/overload relay/surge suppressor assembly as follows:
   a. Install the surge suppressor clip on the new contactor.
   b. Position the new overload relay on the bottom of the new contactor.
   c. Carefully insert the overload relay terminals into the contactor until locked in place.
   d. Tighten the 3 terminal screws connecting the overload relay to the contactor.
   e. Position the contactor assembly on the DIN rail and carefully press into place.

f. Attach the wires to the screw connections in accordance to the wire tags.
g. Tighten the screw connections to secure the wires.
h. Remove the wire tags if necessary.
i. Set the overload relay amp adjustment dial in accordance with the associated contactor number labeled on the contactor as called out in Table 1.

Table 1. Overload Relay Amp Settings.

Contactor Number	Overload Relay Amp Setting
501	5
502	10
503	7 ½
504	33
505	33
506	5
510	8

j. Position the pointer on the Auto/Man dial to MAN.
k. Position the dial on the OVERLOAD RESET to RO.
l. Close the power distribution panel.

Contactor/ Surge Suppressor Replacement:

Parts (TM 10-4610-309-23P):
Contactor, 3 pole, 5 HP
Contactor, 3 pole, 20 HP
Surge Suppressor, 120vac
Equipment Conduction:
TWPS in Standby Shutdown Without Draining Down
Army TWPS: Generator off and TWPS main breaker off
Marine Corps TWPS: TWPS disconnected from power source

Replace a contactor/surge suppressor on the power distribution panel as follows:

WARNING

Electrical hazard. Army personnel: make sure that the generator is off and the TWPS main breaker is off before working on the control panel. Marine Corps personnel: make sure that the TWPS is disconnected from its power source before working on the control panel. Failure to observe this warning could result in serious injury or death from electrical shock.

NOTE
Make sure to obtain the correct type of contactor before replacing.

1. Remove a contactor/surge suppressor as follows (see Figure 5):

a. Open the power distribution panel and locate the contactor/surge suppressor to be replaced.
b. Tag the wires attached to the contactor/surge suppressor.
c. Loosen the screw terminal connections and remove the connecting wires.
d. Using a flat-tip screwdriver, insert it into the DIN rail holding clip at the bottom right side of the contactor. Gently pry down on the holding clip with the screwdriver to release the clip from the DIN rail. Then lift up on the contactor and remove it from the DIN rail.
e. Remove the surge suppressor clip from the contactor.

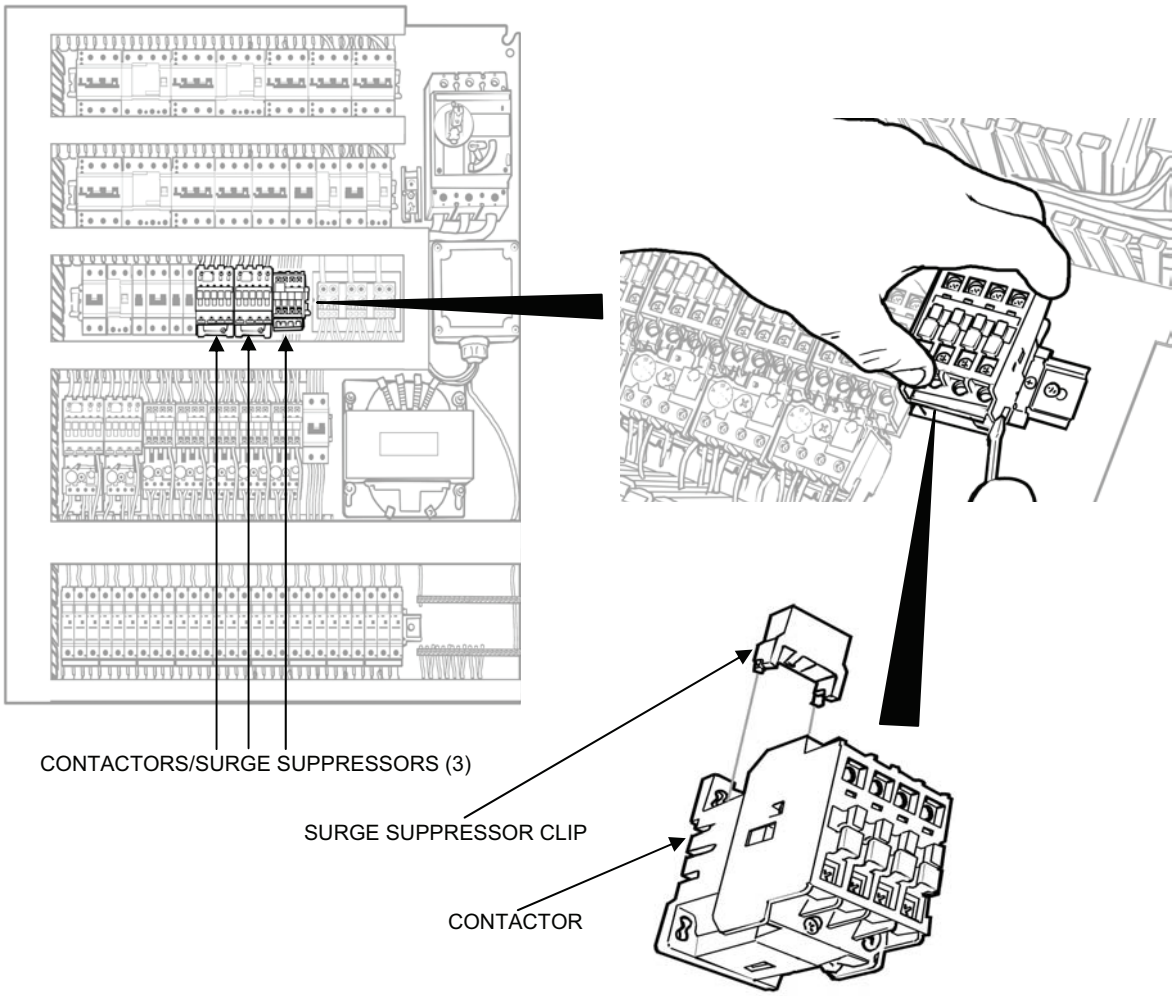

Figure 5. Contactor/Surge Suppressor Replacement.

2. Install a new contactor/surge suppressor as follows:
    a. Install the new surge suppressor clip on the new contactor.
    b. Position the contactor/surge suppressor on the DIN rail and carefully press into place.
    c. Attach the wires to the screw connections in accordance to the wire tags.
    d. Tighten the screw connections to secure the wires.
    e. Remove the wire tags if necessary.
    f. Close the power distribution panel.

Surge Arrester Replacement:

Parts:
Surge arrester (TM 10-4610-309-23P)
Equipment Condition:
TWPS in Standby Shutdown Without Draining Down
Army TWPS: Generator off and TWPS main breaker off
Marine Corps TWPS: TWPS disconnected from power source

Replace a surge arrester on the power distribution panel as follows:

WARNING

Electrical hazard. Army personnel: make sure that the generator is off and the TWPS main breaker is off before working on the control panel. Marine Corps personnel: make sure that the TWPS is disconnected from its power source before working on the control panel. Failure to observe this warning could result in serious injury or death from electrical shock.

1. Remove the surge arrester as follows (see Figure 6):
    a. Open the power distribution panel and locate the surge arrester.
    b. Carefully pull the surge arrestor from the arrestor assembly socket.

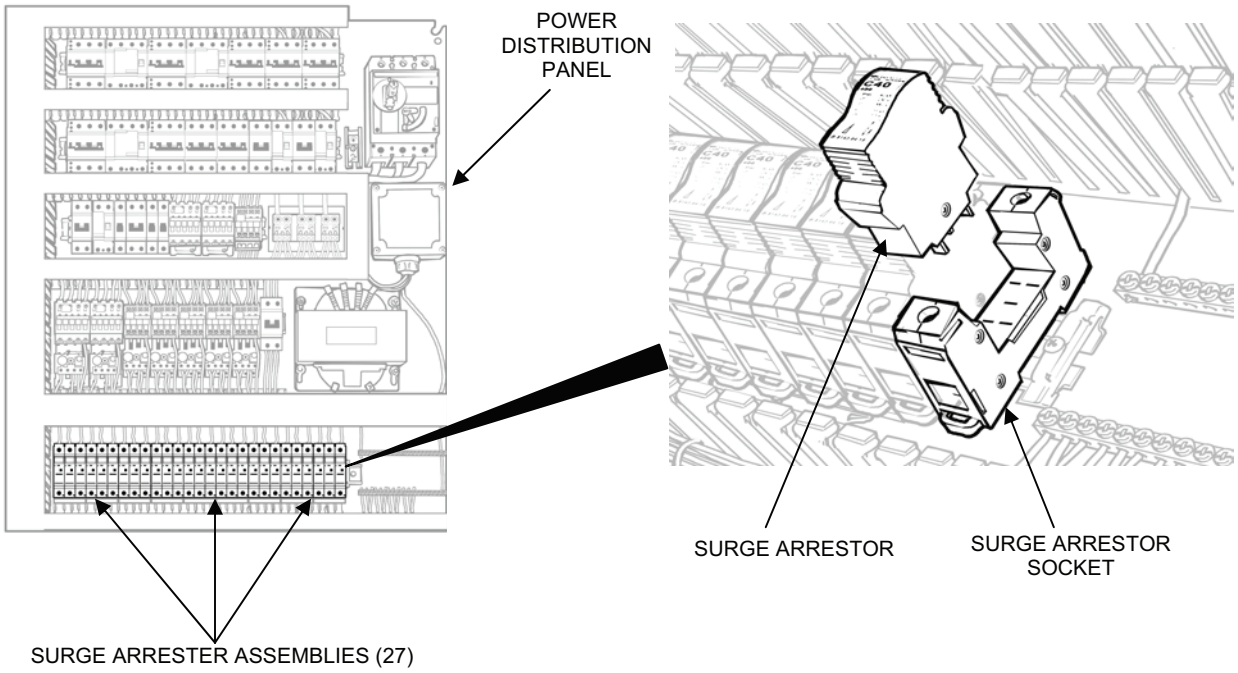

Figure 6. Surge Arrestor Replacement.

2. Install the new surge arrester as follows (see Figure 6):
    a. Position the new surge arrester in socket and align pins with socket pin holes.
    b. Carefully push surge arrester in place.
    c. Close power distribution panel.

Surge Arrester Assembly Replacement:

Parts:
Surge arrester (TM 10-4610-309-23P)
Equipment Condition:
TWPS in Standby Shutdown Without Draining Down
Army TWPS: Generator off and TWPS main breaker off
Marine Corps TWPS: TWPS disconnected from power source

Replace a complete surge arrester assembly on the power distribution panel as follows:

WARNING

Electrical hazard. Army personnel: make sure that the generator is off and the TWPS main breaker is off before working on the control panel. Marine Corps personnel: make sure that the TWPS is disconnected from its power source before working on the control panel. Failure to observe this warning could result in serious injury or death from electrical shock.

1. Remove the surge arrester assembly as follows (see Figure 7):
   a. Open the power distribution panel and locate the surge arrester.
   b. Tag the wires connected to the surge arrester.
   c. Loosen the screw connections and remove the connecting wires.
   d. Pull the busbar jumper from the bottom of the surge arrestor and retain for replacement.
   e. Using a flat-tip screwdriver, insert it into the DIN rail holding clip at the bottom of the arrestor assembly. Gently pry down on the holding clip with the screwdriver to release the clip from the DIN rail. Then lift up on the assembly and remove it from the DIN rail.

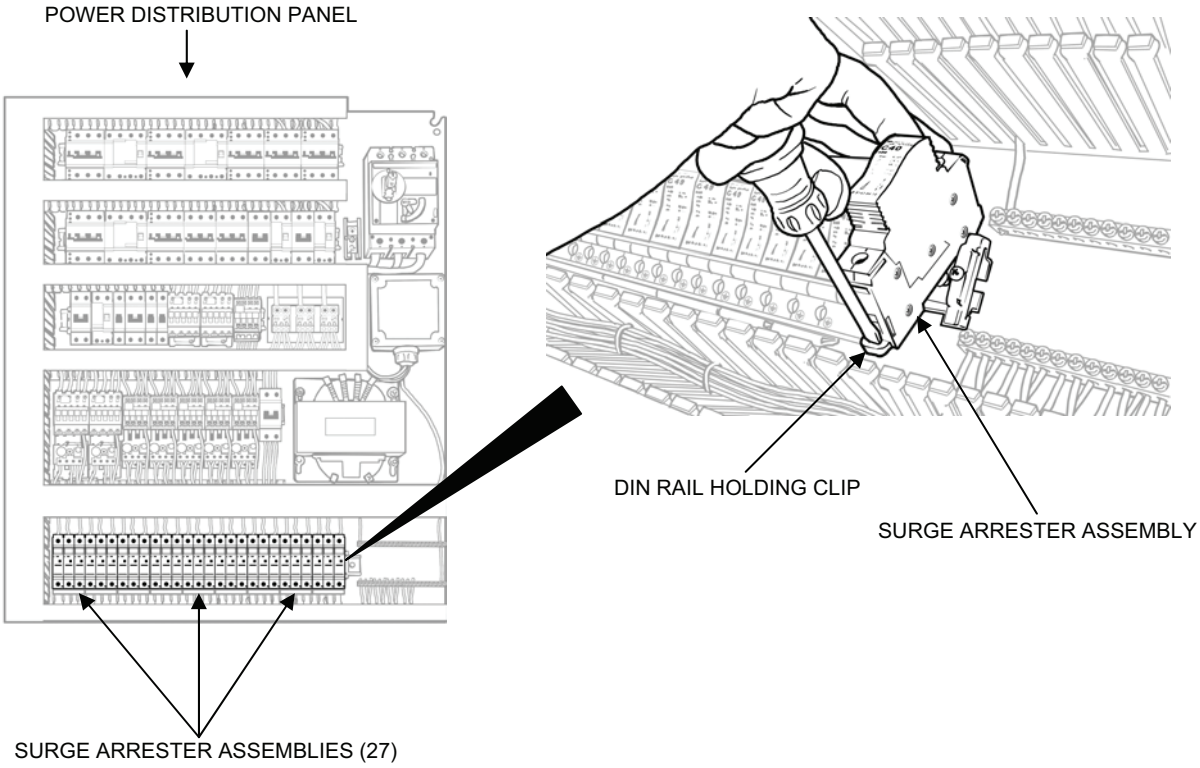

Figure 7. Surge Arrester Assembly Replacement.

2. Install the new surge arrester as follows:
    a. Position the new surge arrester on the DIN rail.
    b. Carefully press the surge arrestor in place on the DIN rail.
    c. Insert the wires in the screw/plug connections in accordance to the wire tags.
    d. Replace the busbar jumper at the bottom of the surge arrestor.
    e. Tighten the screw connections to secure the wires and busbar jumper.
    f. Remove the wire tags if necessary.
    g. Close the power distribution panel.

Busbar Jumper Replacement:

Parts (TM 10-4610-309-23P):
- Busbar Jumper, 2 position
- Busbar Jumper, 3 position

Equipment Condition:
- TWPS in Standby Shutdown Without Draining Down
- Army TWPS: Generator off and TWPS main breaker off
- Marine Corps TWPS: TWPS disconnected from power source

Replace a busbar jumper on the power distribution panel as follows:

WARNING

Electrical hazard. Army personnel: make sure that the generator is off and the TWPS main breaker is off before working on the control panel. Marine Corps personnel: make sure that the TWPS is disconnected from its power source before working on the control panel. Failure to observe this warning could result in serious injury or death from electrical shock.

NOTE
Make sure to obtain the correct type Busbar Jumper before replacing.

1. Remove a busbar jumper as follows (see Figure 8):
   a. Open the power distribution panel and locate the busbar jumper to be replaced.
   b. Loosen the screw connections at the bottom of the surge arrestor securing the busbar jumper.
   c. Pull the busbar jumper from the surge arrestor.

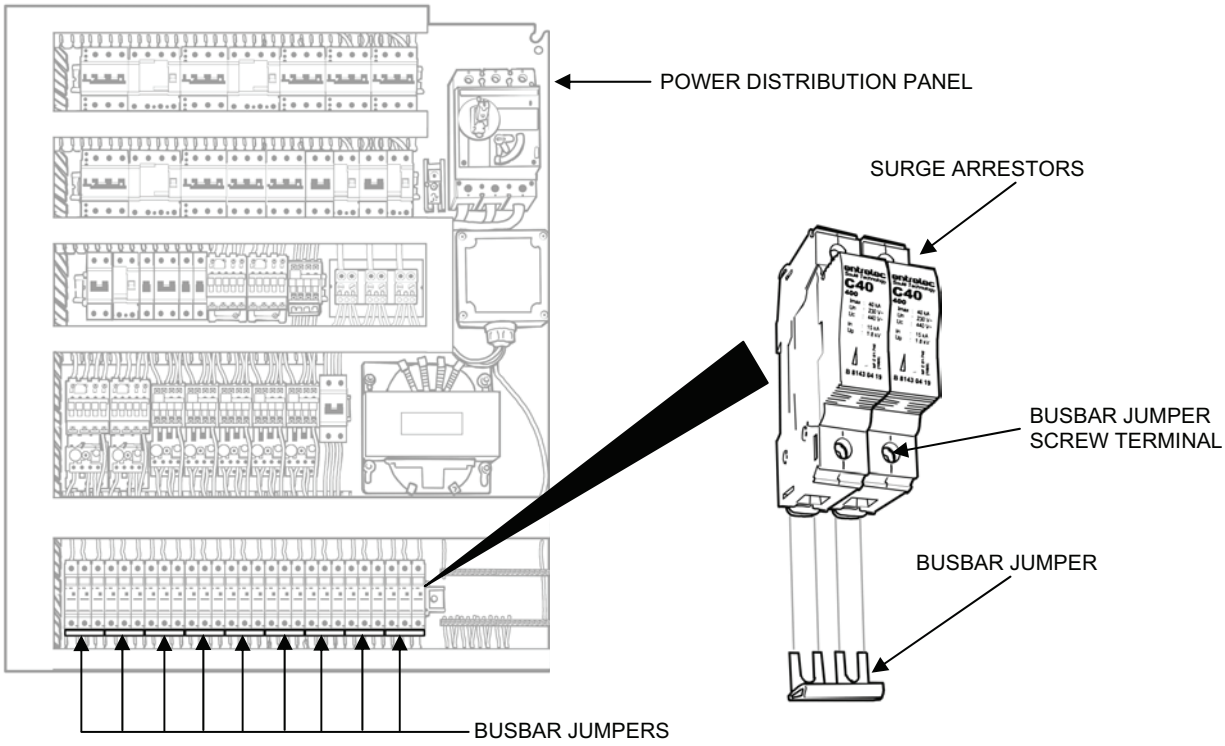

Figure 8. Busbar Jumper Replacement.

2. Install a busbar jumper as follows:
    a. Open the busbar jumper screw terminals fully before positioning the jumper.
    b. Position the new busbar jumper at the bottom of the surge arrestor.
    c. Push the busbar jumper into the surge arrestor until flush.
    d. Tighten the screw terminals at the bottom of the surge arrestor to secure the busbar jumper.

Surge Suppressor Replacement:

Parts:
Surge Suppressor (TM 10-4610-309-23P)
Equipment Condition:
TWPS in Standby Shutdown Without Draining Down
Army TWPS: Generator off and TWPS main breaker off
Marine Corps TWPS: TWPS disconnected from power source

Replace the surge suppressor on the power distribution panel as follows:

WARNING

Electrical hazard. Army personnel: make sure that the generator is off and the TWPS main breaker is off before working on the control panel. Marine Corps personnel: make sure that the TWPS is disconnected from its power source before working on the control panel. Failure to observe this warning could result in serious injury or death from electrical shock.

1. Remove the surge suppressor as follows (see Figure 9):
   a. Open the power distribution panel and locate the surge suppressor.
   b. Tag the wires running from the surge suppressor to the L1, 2, 3, Neutral, and Ground terminals.
   c. Disconnect the wires from the terminal lugs.
   d. Loosen the four screws that secure the surge suppressor cover to the surge suppressor.
   e. Carefully remove the cover and allow for the attaching wires.
   f. Remove the four screws inside the surge suppressor.
   g. Remove the surge suppressor.

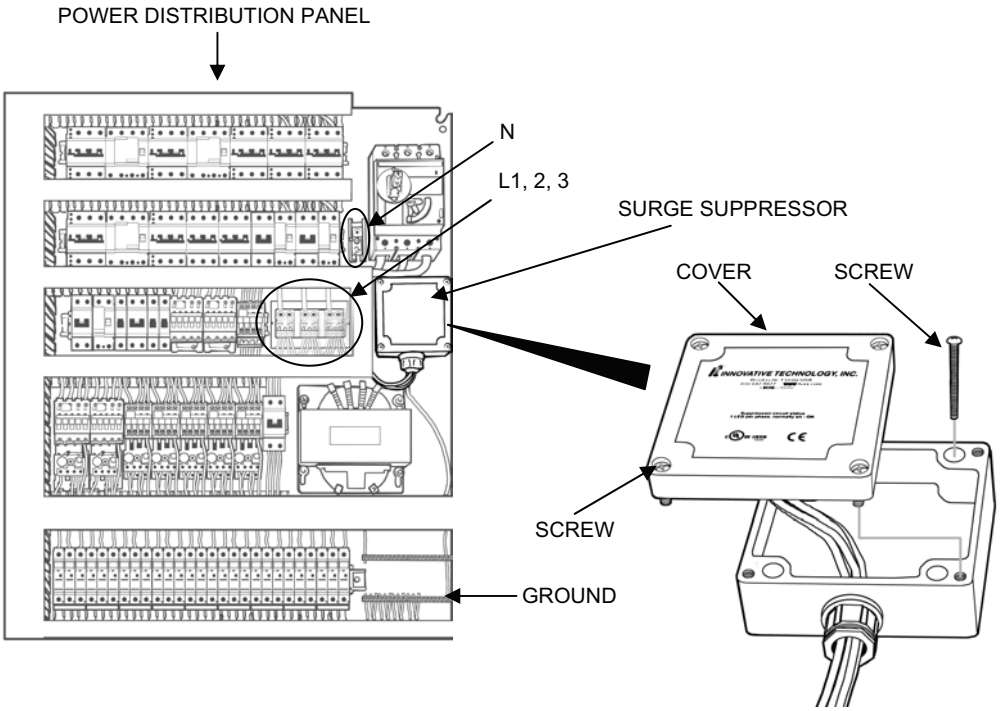

Figure 9. Surge Suppressor Replacement.

2. Install the new surge suppressor as follows:
    a. Position the new surge suppressor on the power distribution panel.
    b. Secure the surge suppressor to the power distribution panel using four screws inside the surge suppressor.
    c. Position the cover on the surge suppressor and tighten the four screws.
    d. Connect the wires from surge suppressor to the L1, 2, 3, Neutral, and Ground terminals.
    e. Remove the wire tags if necessary.
    f. Close the power distribution panel.

Transformer Replacement:

Parts:
Transformer (TM 10-4610-309-23P)
Equipment Condition:
TWPS in Standby Shutdown Without Draining Down
Army TWPS: Generator off and TWPS main breaker off
Marine Corps TWPS: TWPS disconnected from power source

Replace the transformer on the power distribution panel as follows:

WARNING

Electrical hazard. Army personnel: make sure that the generator is off and the TWPS main breaker is off before working on the control panel. Marine Corps personnel: make sure that the TWPS is disconnected from its power source before working on the control panel. Failure to observe this warning could result in serious injury or death from electrical shock.

1. Remove the transformer as follows (see Figure 10):
   a. Open the power distribution panel and locate the transformer.
   b. Tag the wires attached to the transformer.
   c. Loosen the screw connections and remove the connecting wires.
   d. Remove the four nuts, flat washers and tooth washers that secure the transformer to the power distribution panel and retain for reassembly.
   e. Remove the transformer from the power distribution panel.

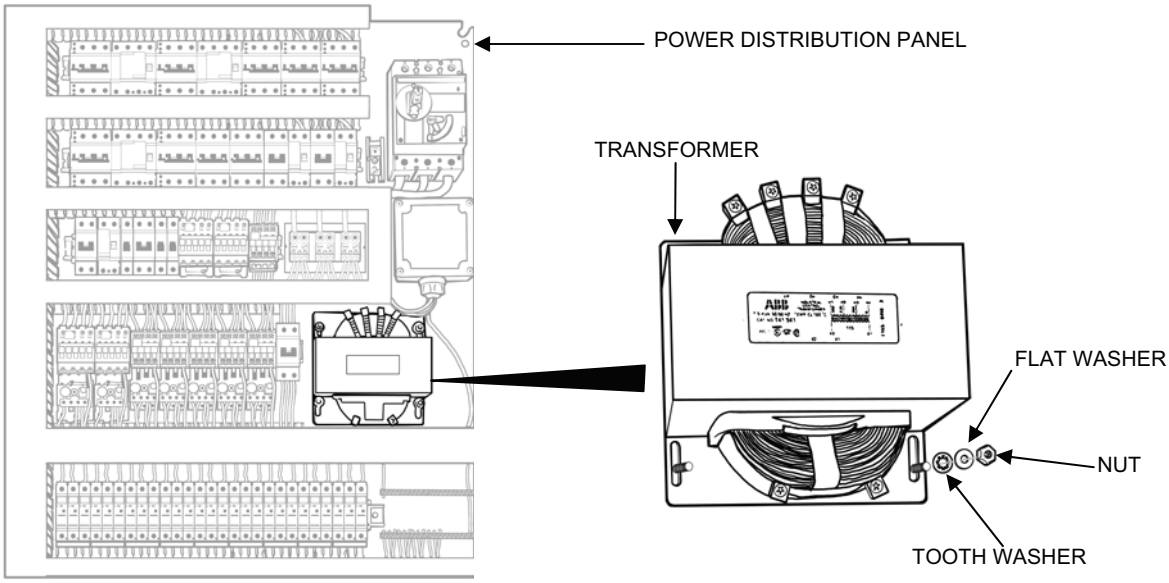

Figure 10. Transformer Replacement.

2. Install new transformer as follows:
   a. Position the transformer on the power distribution panel.
   b. Secure the transformer to the power distribution panel using the four nuts, flat washers and tooth washers.
   c. Attach the wires to the screw connections in accordance to the wire tags.
   d. Remove the wire tags if necessary.
   e. Close the power distribution panel.

125 Amp Main Power Circuit Breaker Replacement:

Parts (TM 10-4610-309-23P):
- Circuit Breaker, 125 Amp
- Breaker Disconnect Mechanism
- Disconnect shaft

Equipment Condition:
- TWPS in Standby Shutdown Without Draining Down
- Army TWPS: Generator off and TWPS main breaker off
- Marine Corps TWPS: TWPS disconnected from power source

Replace the 125 Amp Main Power circuit breaker on the power distribution panel as follows:

WARNING

Electrical hazard. Army personnel: make sure that the generator is off and the TWPS main breaker is off before working on the control panel. Marine Corps personnel: make sure that the TWPS is disconnected from its power source before working on the control panel. Failure to observe this warning could result in serious injury or death from electrical shock.

1. Remove the 125 Amp Main Power circuit breaker as follows (see Figure 11):
   a. Open the power distribution panel and locate the circuit breaker.
   b. Tag the wires attached to the circuit breaker.
   c. Remove the door breaker mechanism from the circuit breaker by loosening the four screws. Note that two screws are located behind the label at the top of the breaker mechanism.
   d. Remove the disconnect shaft from the breaker mechanism if replacement of new breaker mechanism is required.
   e. Loosen the hex key screw terminals on the circuit breaker and remove the connecting wires.
   f. Remove the four screws that secure the circuit breaker to the power distribution panel and retain for reassembly.
   g. Remove the circuit breaker from the panel.

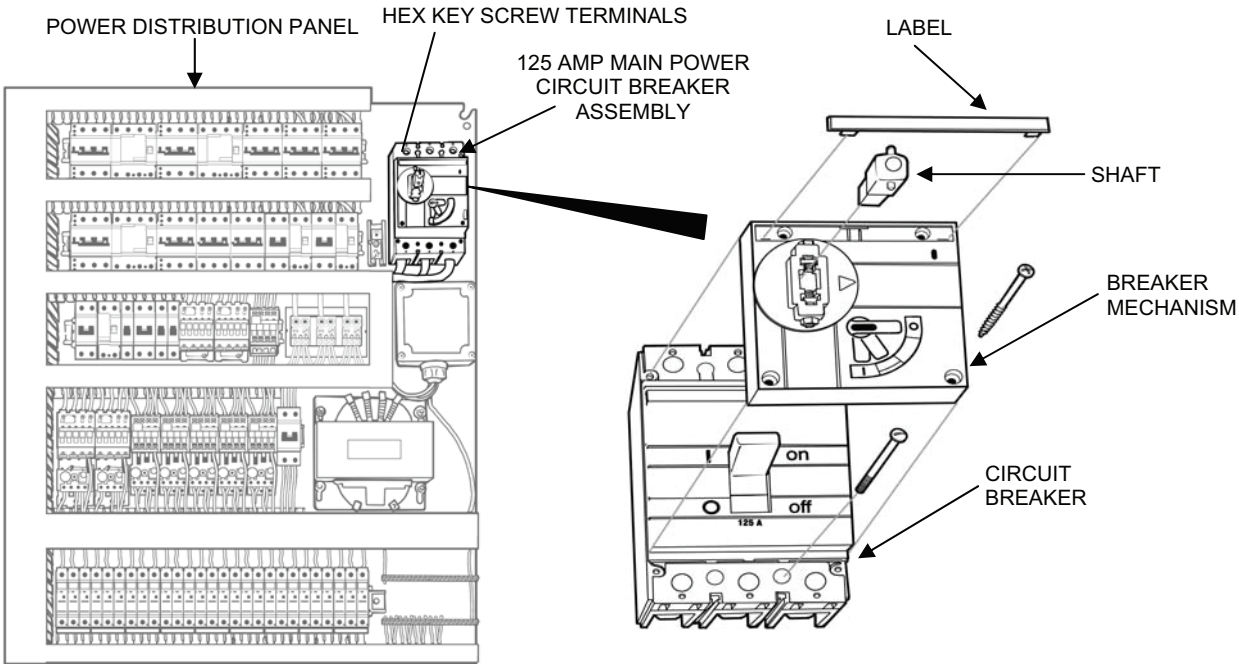

Figure 11. 125 Amp Main Power Circuit Breaker Assembly Replacement.

2. Install the new 125 Amp main power circuit breaker as follows:
   a. Position the new circuit breaker on the panel.
   b. Secure the circuit breaker to the panel using the four screws.
   c. Attach the wires to the screw connections in accordance to the wire tags.
   d. Tighten the hex key screw terminals to secure the wires.
   e. Remove the wire tags if necessary.
   f. Make sure the slot on the door breaker mechanism lines up with the switch on the breaker.
   g. Reinstall the shaft to the breaker mechanism if a new mechanism is being install.
   h. Reinstall the breaker mechanism to the circuit breaker. Tighten the four screws.
   i. Close the power distribution panel.

Distribution Block Replacement:

Parts (TM 10-4610-309-23P):
Distribution Block, three pole
Distribution Block, single pole
Equipment Condition:
TWPS in Standby Shutdown Without Draining Down
Army TWPS: Generator off and TWPS main breaker off
Marine Corps TWPS: TWPS disconnected from power source

Replace a distribution block on the power distribution panel as follows:

WARNING

Electrical hazard. Army personnel: make sure that the generator is off and the TWPS main breaker is off before working on the control panel. Marine Corps personnel: make sure that the TWPS is disconnected from its power source before working on the control panel. Failure to observe this warning could result in serious injury or death from electrical shock.

NOTE

Make sure to obtain the correct type of distribution block before replacing.

1. Remove a distribution block as follows (see Figure 12):
   a. Open the power distribution panel and locate the distribution block to be replaced.
   b. Remove the distribution block cover and retain for reassembly.
   c. Tag the wires attached to the distribution block.
   d. Loosen the hex key terminal connections and the screw connections and remove the connecting wires.
   e. Remove the six screws and tooth washers that secure the distribution block to the power distribution panel and retain for reassembly.
   f. Remove the distribution block from the panel.

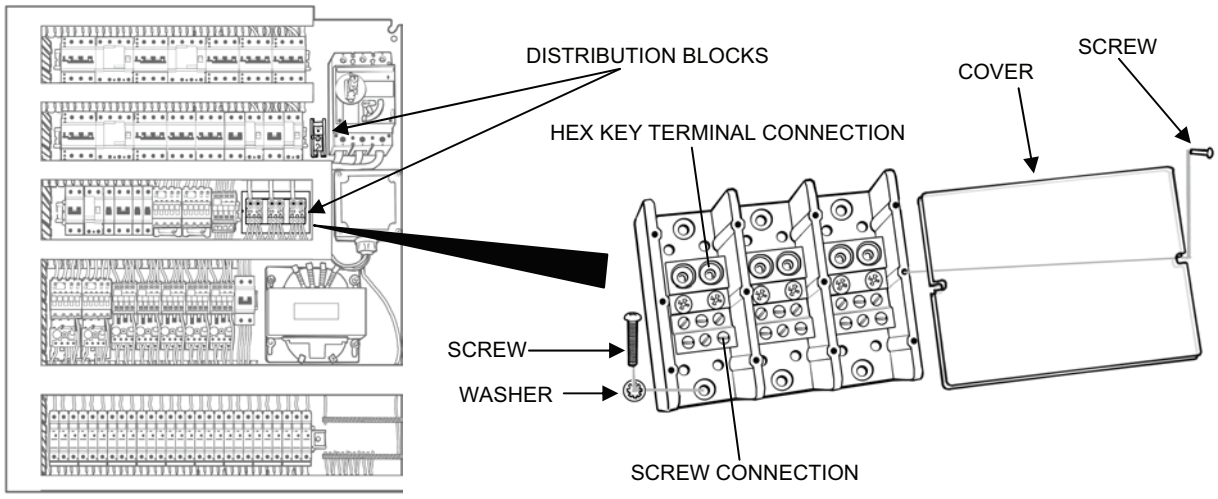

Figure 12. Distribution Block Assembly Replacement.

2. Install a new distribution block as follows:
    a. Position the new distribution block on the panel.
    b. Secure the distribution block to the panel using the six screws and tooth washers.
    c. Attach the wires to the screw connections in accordance to the wire tags.
    d. Tighten the hex key terminal connections and screw connections to secure the wires.
    e. Remove the wire tags if necessary.
    f. Install the distribution block cover.
    g. Close the power distribution panel.

Power Connector Replacement:

Parts (TM 10-4610-309-23P):
Connector, 3 socket, 16 shell
Connector, 7 socket, 20 shell
Connector, 7 socket, 22 shell
Connector, 7 socket, 24 shell
Gasket, plain
Equipment Condition:
TWPS in Standby Shutdown Without Draining Down
Army TWPS: Generator off and TWPS main breaker off
Marine Corps TWPS: TWPS disconnected from power source

Replace the power connectors on the power distribution box as follows:

WARNING

Electrical hazard. Army personnel: make sure that the generator is off and the TWPS main breaker is off before working on the control panel. Marine Corps personnel: make sure that the TWPS is disconnected from its power source before working on the control panel. Failure to observe this warning could result in serious injury or death from electrical shock.

NOTE
Make sure to obtain the correct type of connector and gasket before replacing.

1. Remove a power connector from the power distribution box as follows (see Figure 13)
    a. Locate the power connector requiring replacement.
    b. Remove the four screws, washers and nuts that secure the connector to the power distribution box and retain for re-installation.
    c. Carefully pull the connector from the distribution box without applying tension to the connecting wires.
    d. Tag the wires attached to the connector.
    e. Cut the attached wires as close to connector as possible and remove the connector.
    f. Remove the dust cover and retain for reinstallation.
    g. Carefully remove the gasket from the distribution box..

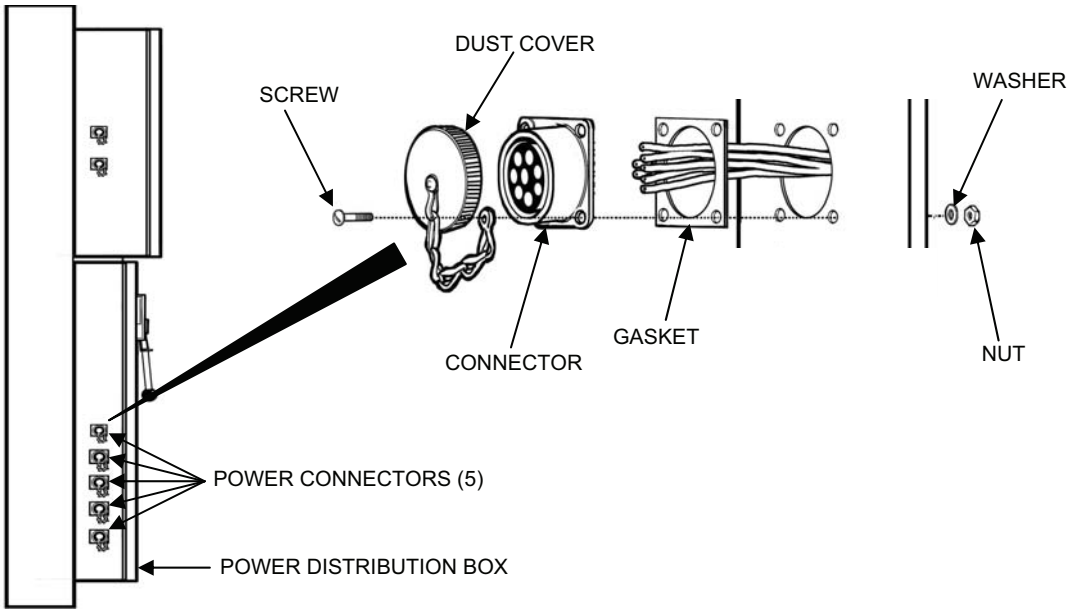

Figure 13. Power Connector Replacement

2. Install new power connector.
    a. Position the new gasket through the wires on the distribution box.
    b. Strip ¾ in. of insulation off the end of each wire.
    c. Solder the wires to new connector connecting pins according to wire tags.
    d. Align the connector and gasket with the screw holes on the power distribution box.
    e. Position the end of dust cover chain on one of the screw holes with the connector and gasket.
    f. Secure the connector, gasket and dust cover chain to the power distribution box using the four screws, washers and lock nuts.

Light Outlet Assembly Replacement:

Parts (TM 10-4610-309-23P):
Light outlet assembly, 5 socket, 16 shell
Light outlet assembly, 3 socket, 16 shell
Gasket, plain
Equipment Condition:
TWPS in Standby Shutdown Without Draining Down
Army TWPS: Generator off and TWPS main breaker off
Marine Corps TWPS: TWPS disconnected from power source

Replace the light outlet assemblies on the power distribution box door as follows:

WARNING

Electrical hazard. Army personnel: make sure that the generator is off and the TWPS main breaker is off before working on the control panel. Marine Corps personnel: make sure that the TWPS is disconnected from its power source before working on the control panel. Failure to observe this warning could result in serious injury or death from electrical shock.

NOTE

Make sure to obtain the correct type of light outlet assembly before replacing.

1. Remove a light outlet assembly from the power distribution box door as follows (see Figure 14)
   a. Locate the light outlet assembly requiring replacement.
   b. Open the power distribution door and locate the back of the light outlet.
   c. Remove the four screws, washers and nuts that secure the light outlet to the power distribution box door and retain for re-installation.
   d. Tag the connection point of the wires from the light outlet to the outlet switches and the utility outlet.
   e. Disconnect the wires at the outlet switches and utility outlet.
   f. Carefully pull the light outlet assembly through the power distribution box door and remove the light outlet assembly.
   g. Remove the dust cap from the light outlet and retain for reassembly.
   h. Carefully remove the gasket from the power distribution box door.

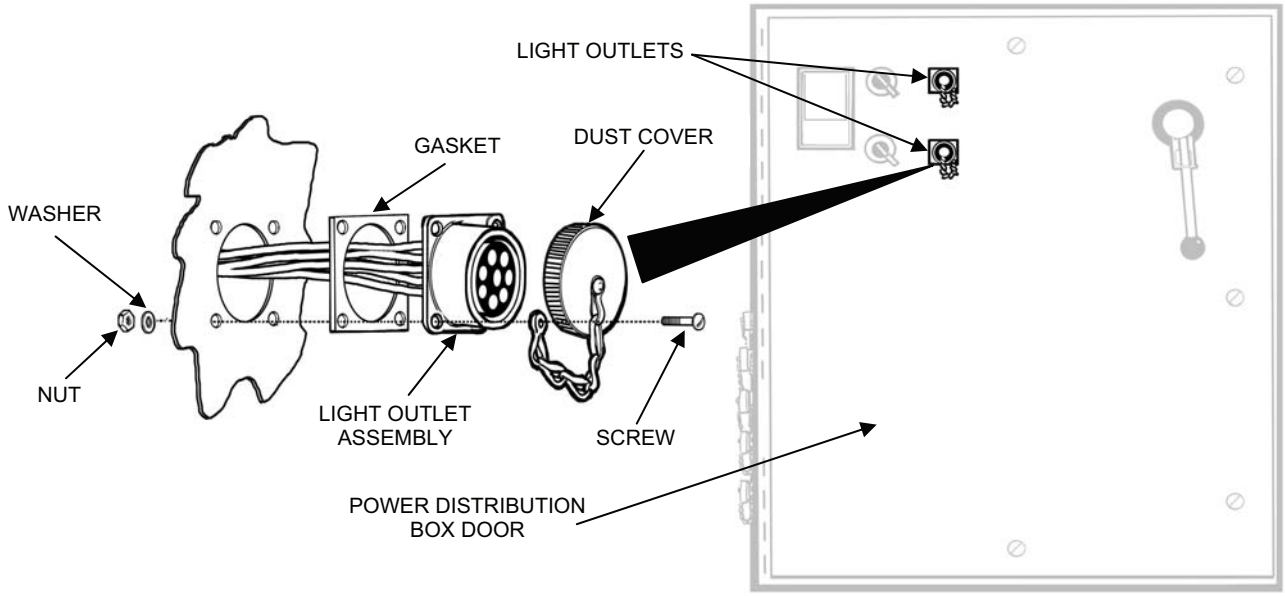

Figure 14. Light Outlet Assembly Removal.

2. Install the new light outlet assembly as follows:
    a. Position the new gasket through the wire end of the new light outlet assembly up to the light outlet connector end of the light outlet assembly.
    b. Insert the cable end of the light outlet assembly through the light outlet hole of the power distribution box door.
    c. Align the gasket and connector with the screw holes on the power distribution box door.
    d. Position the end of the dust cover chain on one of screw holes with the connector and gasket.
    e. Secure the connector, gasket and dust cover to the power distribution box using the four screws, washers and lock nuts.
    f. Connect the wire end of the light outlet assembly to the outlet switches and the utility outlet in accordance to the tagged connection points.
    g. Screw the dust cover on the light outlet.
    h. Close the power distribution box door.

Utility Outlet Assembly Replacement:

Parts (TM 10-4610-309-23P):
Utility Outlet
Outlet Cover
Equipment Condition:
TWPS in Standby Shutdown Without Draining Down
Army TWPS: Generator off and TWPS main breaker off
Marine Corps TWPS: TWPS disconnected from power source

Replace the utility outlet assembly on the power distribution box door as follows:

WARNING

Electrical hazard. Army personnel: make sure that the generator is off and the TWPS main breaker is off before working on the control panel. Marine Corps personnel: make sure that the TWPS is disconnected from its power source before working on the control panel. Failure to observe this warning could result in serious injury or death from electrical shock.

1. Remove the utility outlet from the power distribution box door as follows (see Figure 15):
    a. Locate the utility outlet assembly requiring replacement.
    b. Open the power distribution box door and locate the back of the utility outlet.
    c. Remove the four screws, washers and nuts that secure the outlet cover and retain for reinstallation.
    d. Remove the outlet cover.
    e. Remove the two screws, washers, and nut that secure the utility outlet and retain for reinstallation.
    f. Carefully pull the utility outlet from the distribution door without applying tension to the connecting wires.
    g. Tag the wires connected to the utility outlet.
    h. Loosen the screw connections and remove the connecting wires.
    i. Remove the utility outlet and box from the power distribution box door.

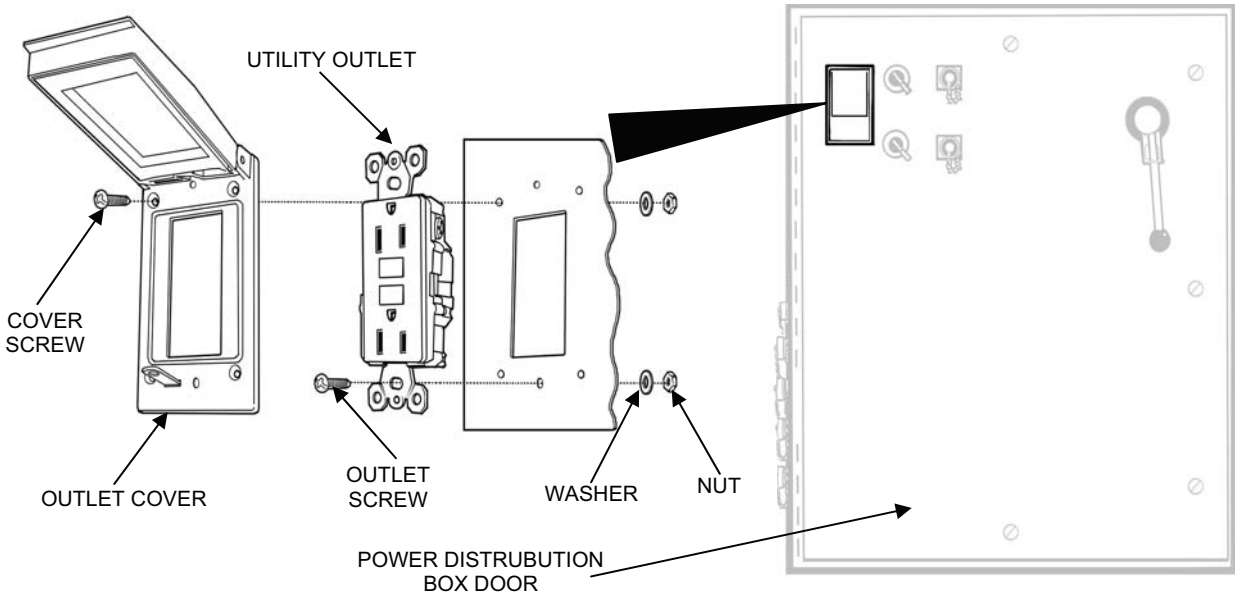

Figure 15. Utility Outlet Assembly Replacement.

2. Install the new utility outlet assembly as follows:
    a. Attach the wires to the screw connections on the new utility outlet in accordance to the wire tags.
    b. Tighten the screws to secure the wires.
    c. Remove the wire tags.
    d. Position the utility outlet on the power distribution box door and secure using the two screws, washers, and nuts.
    e. Position the outlet cover on the power distribution box door and secure using the four screws, washers, and nuts.
    f. Close the power distribution box door.

Light Switch Replacement:

Parts (TM 10-4610-309-23P):
Selector Switch
Selector Switch
EMI Gasket
Equipment Condition:
TWPS in Standby Shutdown Without Draining Down
Army TWPS: Generator off and TWPS main breaker off
Marine Corps TWPS: TWPS disconnected from power source

Replace the light switches on the power distribution box door as follows:

WARNING

Electrical hazard. Army personnel: make sure that the generator is off and the TWPS main breaker is off before working on the control panel. Marine Corps personnel: make sure that the TWPS is disconnected from its power source before working on the control panel. Failure to observe this warning could result in serious injury or death from electrical shock.

NOTE

Make sure to obtain the correct type of switch before replacing.

1. Remove a light switch as follows (see Figure 16):
   a. Open the power distribution box door and locate the light switch to be replaced.
   b. Tag the wires attached to the light switch.
   c. Loosen the screw connections and remove the connecting wires.
   d. Remove the knob with the ring nut that secures the light switch to the door.
   e. Remove the light switch, rubber washer, locking washer, sealing washer and EMI gasket from the door.

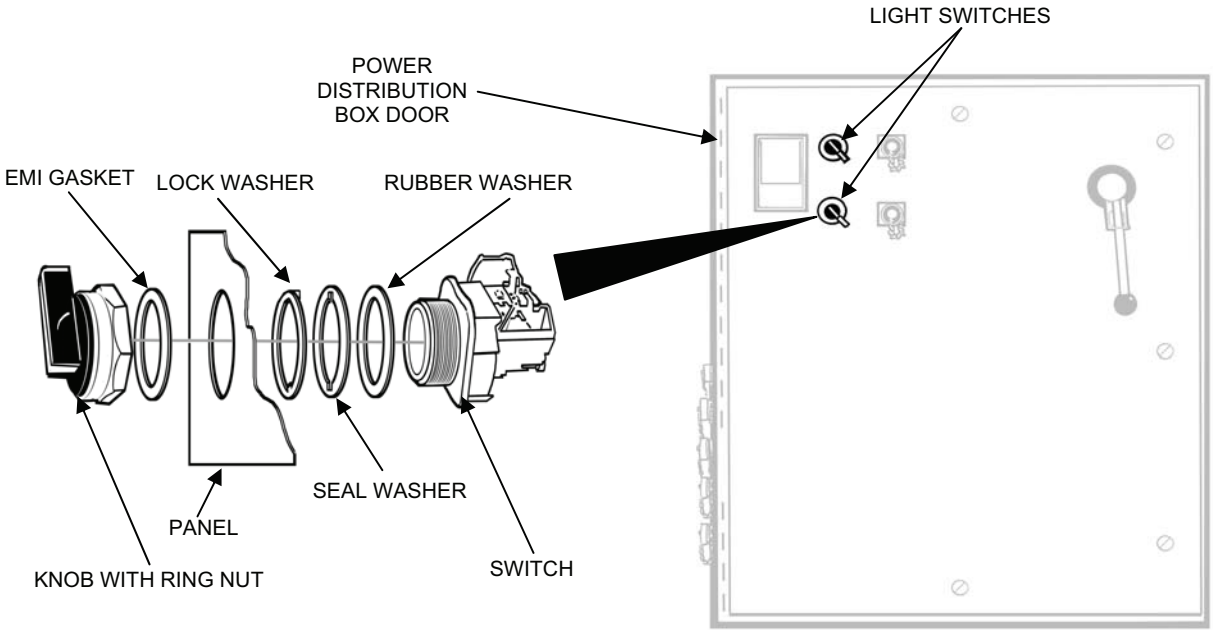

Figure 16. Light Switch Replacement.

2. Install a new light switch as follows:
    a. Position the new light switch, rubber washer, locking washer, sealing washer and EMI gasket in the power distribution box door.
    b. Secure the light switch to the door using the ring nut with the knob.
    c. Attach the wires to the screw connections in accordance to the wire tags.
    d. Tighten the screw connections to secure the wires.
    e. Remove the wire tags if necessary.
    f. Close the power distribution box door.

Main Circuit Breaker Handle Replacement:

Parts:
Main Circuit Breaker Handle (TM 10-4610-309-23P)
Equipment Condition:
TWPS in Standby Shutdown Without Draining Down
Army TWPS: Generator off and TWPS main breaker off
Marine Corps TWPS: TWPS disconnected from power source

Replace the main circuit breaker handle on the power distribution box door as follows:

WARNING

Electrical hazard. Army personnel: make sure that the generator is off and the TWPS main breaker is off before working on the control panel. Marine Corps personnel: make sure that the TWPS is disconnected from its power source before working on the control panel. Failure to observe this warning could result in serious injury or death from electrical shock.

1. Remove the main circuit breaker handle as follows (see Figure 17):
    a. Open the power distribution box door.
    b. Locate the rear of the main circuit breaker handle and remove the two nuts and washers securing the rear bracket to the door.
    c. Remove the rear bracket and gasket.
    d. Remove the screws from the front of the main circuit breaker handle.
    e. Remove the handle, front bracket and gasket from the distribution box door.

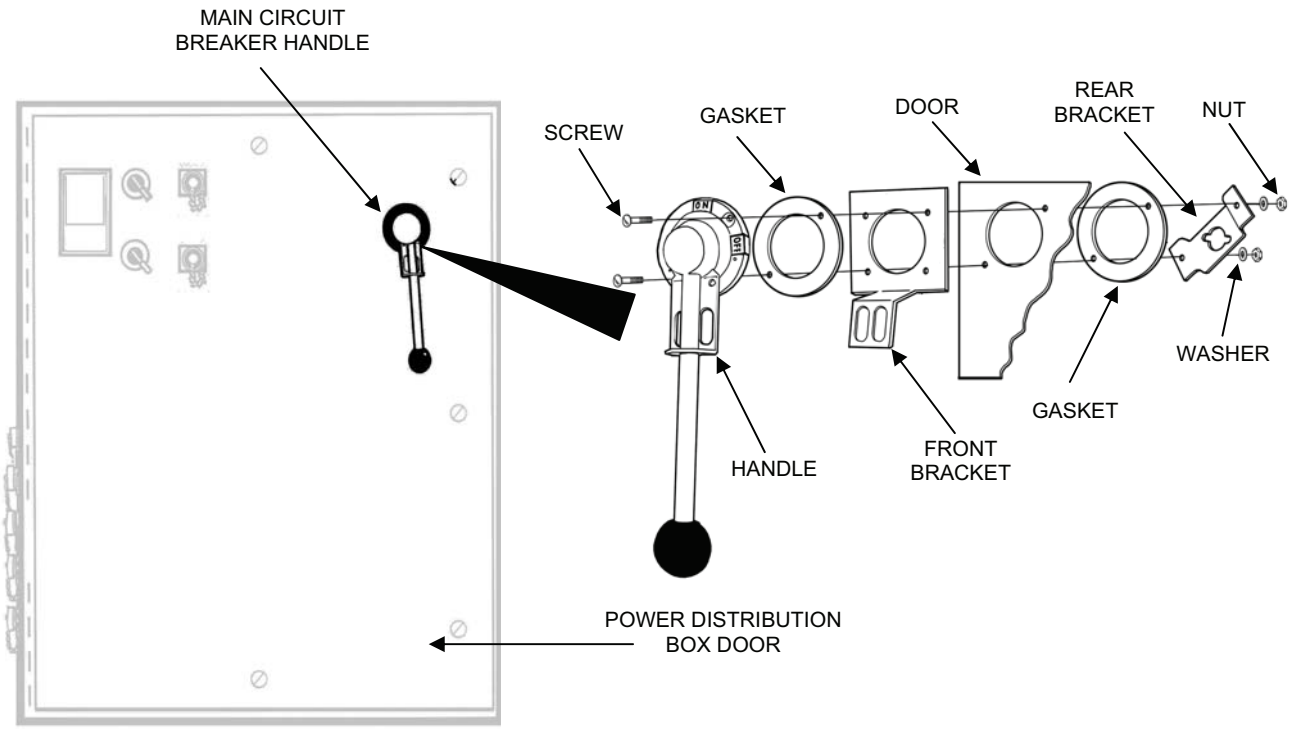

Figure 17. Main Circuit Breaker Handle Replacement.

2. Install new main circuit breaker handle as follows:
    a. Position the handle, front bracket and gasket on the front of the power distribution door and align with the holes in the door.
    b. Insert the two screws into the holes.
    c. Position the rear bracket on the screw inserts at the rear of the power distribution box door.
    d. Install the two nuts and washers to the screw inserts. Do not tighten.
    e. Close the power distribution box door slowly and check that the hole of the rear bracket is aligned with the main power circuit breaker switch on the power distribution panel. If it is not, make the necessary adjustment.
    f. Tighten the two nuts on the rear bracket.

END OF WORK PACKAGE

TACTICAL WATER PURIFICATION SYSTEM (TWPS) FIELD MAINTENANCE PROCEDURES COLD WEATHER SYSTEM

0025 00

THIS SECTION COVERS:
Test, Replace, Service

INITIAL SETUP:

Maintenance Level
Field
Tools
Army: General Mechanic's Tool Kit (WP 0037)
Marine Corps: Common No. 1 Tool Set (WP 0037)
Reference:
Refer to TM 10-4610-309-23P for repair parts information
Personnel Required
One
Equipment Condition
TWPS set up for operation

GENERAL:

This work package contains information and instructions for testing, replacing, and servicing components in the Cold Weather System of the TWPS. The procedures covered in this work package include:

- Diesel Heater Burner Head Assembly Cleaning / Replacement
- Diesel Heater Fan Replacement
- Diesel Heater Fuel Filter Replacement
- Diesel Heater Motor Relay and Motor Testing/Replacement
- Diesel Heater Output Air Filter Replacement
- Diesel Heater Overheat Switch Testing/Replacement
- Diesel Heater Photocell Testing/Replacement
- Diesel Heater Safety Control Assembly Testing/Replacement
- Diesel Heater Spark Plug and Transformer Testing/Replacement
- General Purpose Transformer Electrical Outlet Assembly or Power Cord Replacement
- Diesel Heater Air Pump Pressure Adjustment

REPLACE

Diesel Heater Burner Head Assembly Cleaning/Replacement:

Part:
Diesel heater burner head assembly (TM 10-4610-309-23P)
Material:
Solvent (WP 0038, Table 1, item 21)
Non-flammable liquid cleaning agent
A small container for soaking the nozzle in solvent
A small container for soaking other parts in cleaning agent
Equipment condition:
Diesel heater OFF and power cord disconnected from source and from heater

Clean or replace the diesel heater burner head assembly as follows:

WARNING

Mechanical and electrical hazard. Before opening up the top cover of the heater to access the burner head assembly, be sure the heater power switch is OFF and the power cord is unplugged from the power source and the heater. Failure to observe this warning may result in injury or death from electrical shock.

1. Remove the burner head from the heater combustion chamber as follows:
   a. Make sure the heater power switch is OFF.
   b. Make sure the heater power cord is unplugged from the power source and from the heater.
   c. Open the top cover of the heater.
   d. Open the access panel at the top of the heater.
   e. Loosen the setscrew that secures the fan to the motor shaft and slide the fan off the motor shaft. (Removing the fan makes it easier to access the burner head and reduces the chance of damaging the fan.) (See Figure 1).
   f. Disconnect the spark plug wire and remove the spark plug from the burner head.
   g. Gently pull the photocell out of its mounting bracket.
   h. Carefully pull the air hose off of the burner head.
   i. Carefully pry the fuel line off of the burner head.
   j. Remove the five screws that secure the burner head to the combustion chamber and lift the burner head out.
   k. If replacing the burner head assembly, remove the photocell bracket from the head, then discard the head assembly.

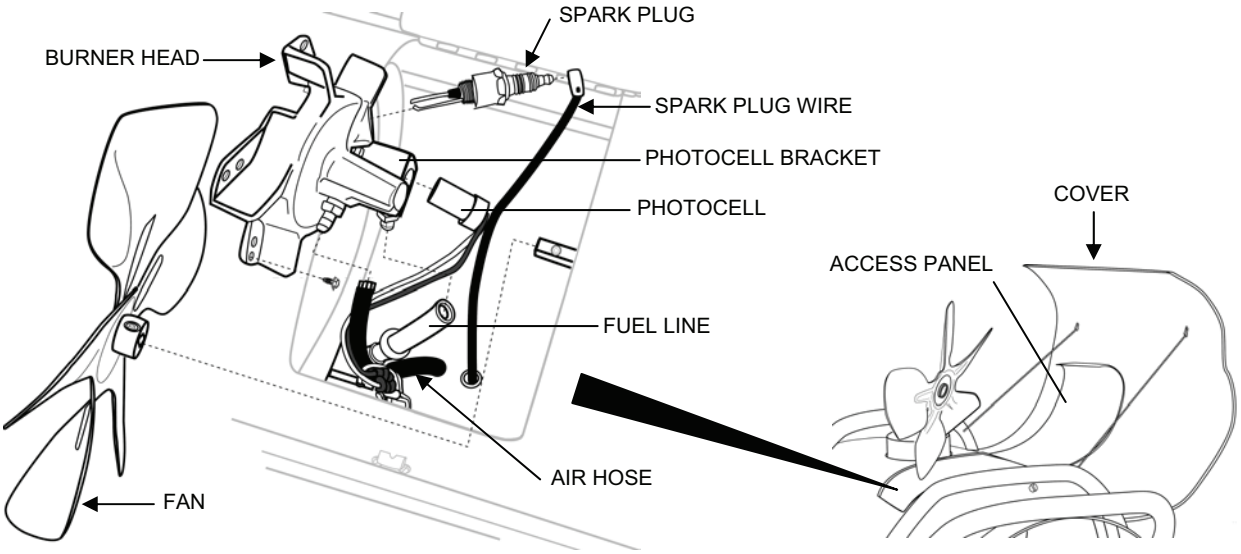

Figure 1. Diesel Heater Burner Head Removal.

2. Carefully remove the nozzle and its associated components (see Figure 2) from the burner head using a socket wrench. If the nozzle is damaged, replace the nozzle.

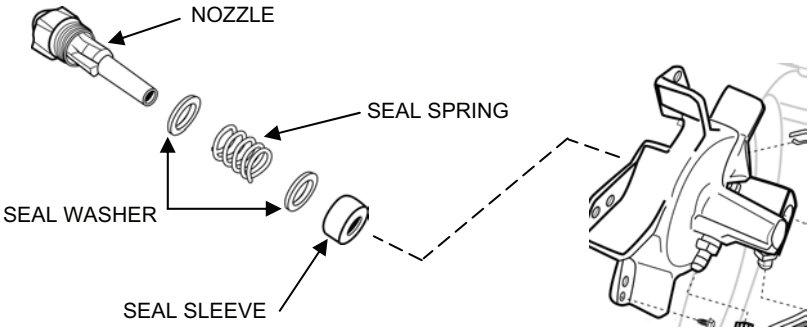

Figure 2. Diesel Heater Burner Head Nozzle.

NOTE

Never use a drill, wire or other tool to open nozzle passage. Any change in the nozzle opening will alter the flow characteristics of the nozzle and will affect the heater's performance.

3. Soak the nozzle in solvent for one hour. Dry the nozzle. Blow air into the discharge end of the nozzle only to clear the nozzle passage. If solvent and air do not remove contamination from the nozzle, replace the nozzle.
4. Soak the remaining parts of the burner head assembly for one hour in non-flammable liquid cleaning agent (do not use kerosene or fuel oil.) Air dry.
5. Reinstall the burner head assembly into the heater as follows:
    a. Screw the nozzle into the burner head with its associated parts in the order shown in Figure 2.
    b. Secure the photocell bracket to the burner head using the two screws if the bracket was removed earlier.
    c. Position the burner head with the fuel line fitting pointing down and the opening for the spark plug just above center and to the right, then secure the burner head to the combustion chamber using the 5 screws.
    d. Connect the fuel line to the fuel line fitting at the bottom of the burner head.
    e. Connect the air line to the air line fitting at the left side of the burner head.
    f. Gently reinsert the photocell all the way in to its holding bracket.
    g. Screw the spark plug into the burner head and tighten using the socket wrench. (Do not over-tighten.)
    h. Reconnect the spark plug wire to the spark plug.
    i. Position the fan so that the setscrew is aligned with the index in the motor shaft and slide the fan onto the shaft. (See Figure 3 if necessary for fan positioning.)
    j. Tighten the setscrew to secure the fan to the shaft.
    k. Close the access panel.
    l. Close and snap the top cover.

Diesel Heater Fan Replacement:

Part:
Diesel heater fan (TM 10-4610-309-23P)
Equipment condition:
Diesel heater OFF and power cord disconnected from source and from heater

Replace the diesel heater fan blades as follows:

WARNING

Mechanical and electrical hazard. Before opening up the top cover of the heater to access the fan blades, be sure the heater switch is OFF and the power cord is unplugged from the power source and the heater. Failure to observe this warning may result in injury if the fan operates or injury or death from electrical shock.

1. Make sure the heater power switch is OFF.
2. Make sure the heater power cord is unplugged from the power source and from the heater.
3. Open the top cover of the heater.
4. Open the access panel at the top of the heater.
5. Loosen the setscrew and slide the damaged fan off the motor shaft (see Figure 3).
6. Position the new fan so that the setscrew is aligned with the index in the motor shaft and slide the fan onto the shaft.
7. Tighten the setscrew to secure the fan to the shaft.
8. Close the access panel.
9. Close and snap the top cover.

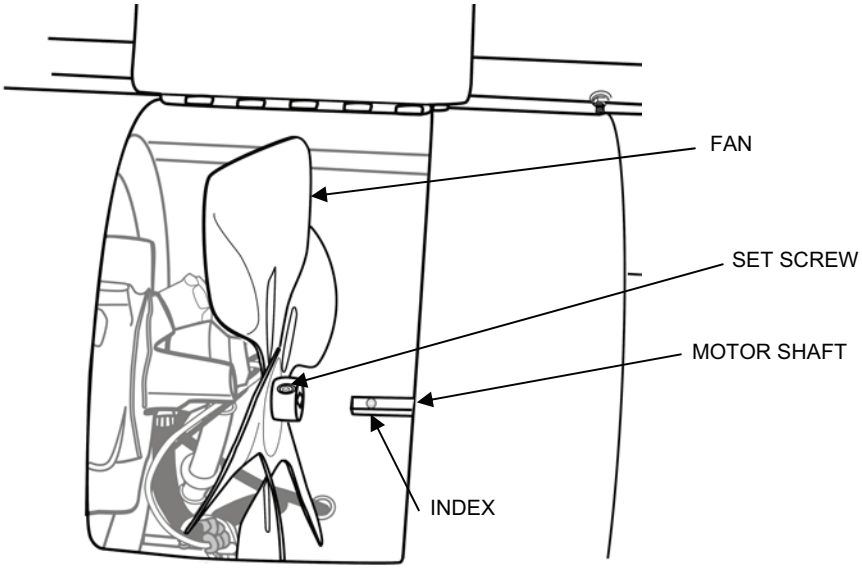

Figure 3. Diesel Heater Fan Replacement.

Diesel Heater Fuel Filter Replacement:

Part:
Diesel heater fuel filter (TM 10-4610-309-23P)
Material:
Small amount of motor oil (WP 0038, Table 1, item 31)
Equipment condition:
Diesel heater OFF and power cord disconnected from source and from heater

Clean or replace the diesel heater fuel filter as follows:

WARNING

Mechanical and electrical hazard. Before opening up the top cover of the heater to access the burner head assembly, be sure the heater power switch is OFF and the power cord is unplugged from the power source and the heater. Failure to observe this warning may result in injury or death from electrical shock.

1. Make sure the heater power switch is OFF.
2. Make sure the heater power cord is unplugged from the power source and from the heater.
3. Open the top cover of the heater by unsnapping the three “screws” at the front of the cover and lifting the cover.
4. Open the access panel at the top of the heater.
5. Loosen the setscrew that secures the fan to the motor shaft and slide the fan off the motor shaft. (Removing the fan makes it easier to access the fuel lines and fuel filter and reduces the chance of damaging the fan.) (See Figure 3.)

NOTE

It may be difficult to disconnect the fuel line from the fuel filter. So two methods for removing the fuel filter are described here. If you follow Method One to remove the filter, follow Method One for installing the new fuel filter. If you follow Method Two to remove the fuel filter, follow Method Two for installing the new fuel filter.

6. Fuel filter removal Method One (see Figure 4):
   a. Gently pull both male ends of the fuel filter out of the fuel line.
   b. Discard the fuel filter.
7. Fuel filter removal Method Two:
   a. Disconnect the fuel line from the burner head assembly.

NOTE

When pulling the fuel line out of the fuel tank, be careful not to pull the rubber bushing out of the fuel tank. If the bushing comes out, it may be necessary to disassemble a significant portion of the heater frame in order to access the fuel tank to reinstall the bushing.

   b. Gently pull the fuel filter so that the bottom fuel line comes completely out of the fuel tank.
   c. Lift the fuel line and fuel filter assembly out of the heater.
   d. Pull the fuel lines off both ends of the old fuel filter. Discard the filter.

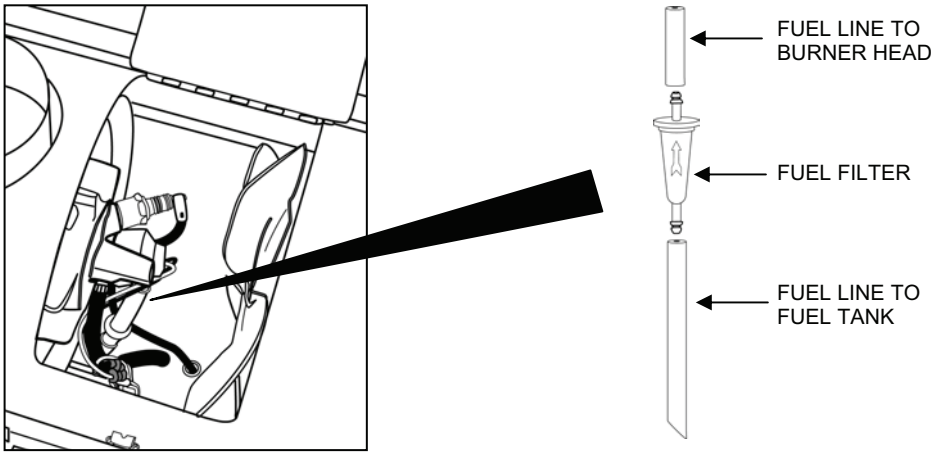

Figure 4. Diesel Heater Fuel Filter Removal and Installation.

8. Fuel filter installation Method One:
    a. Moisten the male ends of the new filter.
    b. Line up the filter with the fuel lines so that the arrow on the side of the filter points in the direction of fuel flow from the tank to the burner.
    c. Insert the male ends of the filter into the fuel lines.
9. Fuel filter installation Method Two:
    a. Moisten the male ends of the new filter.
    b. Line up the filter with the fuel lines so that the arrow on the side of the filter points to the shorter of the two fuel lines and insert the male end of the filter into the fuel line.
    c. Insert the other end of the filter into the longer of the two fuel lines.

NOTE

Be sure to oil the longer of the two fuel lines before inserting it into the rubber bushing. When pushing the fuel line through the bushing and into the fuel tank, be careful not to push the rubber bushing into the fuel tank. If the bushing is pushed into the tank, it may be necessary to disassemble a significant portion of the heater frame in order to access the fuel tank to remove and reinstall the bushing.

    d. Lightly apply motor oil to the longer of the two fuel lines that were attached to the fuel filter.
    e. Carefully push the oiled fuel line through the rubber bushing and into the tank until the top of the shorter, un-oiled fuel line is even with the fuel line fitting on the burner head.
    f. Insert the end of the shorter fuel line onto the fuel line fitting on the burner head.
10. Position the fan so that the setscrew is aligned with the index in the motor shaft and slide the fan onto the shaft. (See Figure 3 if necessary for fan positioning.)
11. Tighten the setscrew to secure the fan to the shaft.
12. Close the access panel.
13. Close and snap the top cover.

Diesel Heater Motor Relay and Motor Testing/Replacement:

Parts (TM 10-4610-309-23P):
Diesel heater motor starting relay
Diesel heater motor and pump assembly
Tool:
Test/ground lead with alligator clips or comparable wire for jumping between two terminals
Equipment condition:
Diesel heater OFF and power cord disconnected from source and from heater

When the diesel heater motor fails to start, check to make sure the power cord is in good condition and plugged in. Also check that the thermostat is in operating condition and set to call for heat. If the power cord and thermostat check out, there may be a problem with the motor relay or the motor.

Test the diesel heater motor relay and motor as follows:

WARNING

Electrical hazard. Before working on the motor relay and motor, be sure the heater power switch is OFF and the power cord is unplugged from the power source and the heater. Then, when power is required, be extremely careful not to let any part of your person touch bare wires, leads, or terminals. Failure to observe this warning may result in serious injury from electrical shock.

1. Remove the motor starting relay as follows:
   a. Make sure the heater power switch is OFF.
   b. Make sure the heater power cord is unplugged from the power source and from the heater.
   c. Remove the three screws that secure the screen to the inlet duct adapter and remove the screen.
   d. (See Figure 5) Remove the two screws that hold the motor starting relay to its bracket inside the inlet end of the heater shell and gently pull the relay out as far as the wires will reach. (If the wires are bound with a plastic tie-wrap, it may be necessary to clip the tie-wrap.)
2. Test the motor starting relay and motor as follows
   a. Tag and remove the black motor wire from terminal three (3) of the starting relay.
   b. Clip one end of the jumper to terminal three (3) of the starting relay.
   c. Clip the other end of the jumper to terminal two (2) of the starting relay.
   d. Make sure the relay is oriented in the same position as when it is installed in the heater. The relay is position sensitive.
   e. Make sure the heater thermostat is set to call for heat.

WARNING

Electrical hazard. After restoring power to the heater to conduct the test, be extremely careful not to let any part of your person touch the spark plug, bare wires, leads, or terminals. Failure to observe this warning may result in serious injury or death from electrical shock.

f. Plug in the heater power cord.
g. If the motor starts, allow it to reach operating speed, then remove the jumper from the right terminal (2) of the relay. The motor should continue to run.

3. If the motor starts and continues to run, the relay is bad. Replace the relay as described below.
4. If the motor does not start, check your test procedures to make sure the test was performed properly.
5. If the test was performed properly and the motor failed to start, the motor is bad. Replace the motor and pump assembly as described below.

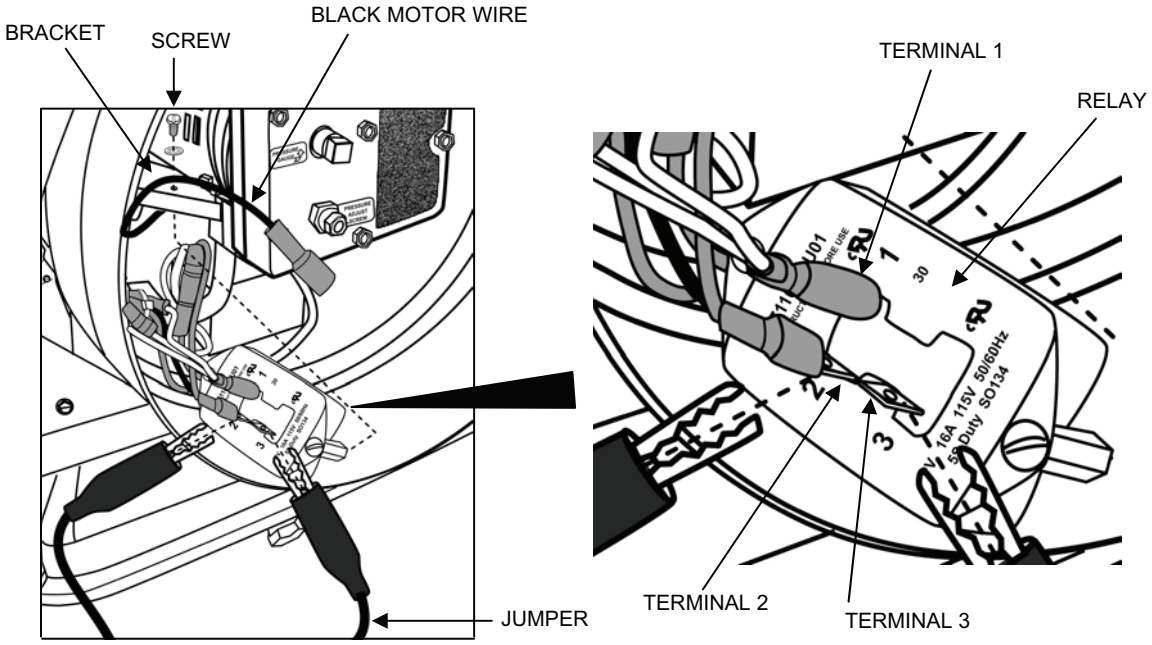

Figure 5. Diesel Heater Motor Relay and Motor Test Set-Up.

Replace / reinstall the motor starting relay as follows (see Figure 5):

1. Unplug the heater power cord from the power source and then from the heater.
2. Remove the jumper from the relay terminals three (3) and two (2).
3. Tag and disconnect the wires from relay terminals one (1) and two (2).
4. Discard the old relay.
5. Connect the two, tagged, white wires to relay terminal one (1).
6. Connect the tagged red and black wires to relay terminal two (2).
7. Connect the black motor wire to relay terminal three (3).

NOTE

The relay is position sensitive. Make sure the relay is mounted to the heater shell with the terminals on the bottom (facing down).

8. Orient the relay so it is in the same position it was in before it was removed and secure the relay to its mounting bracket with the two screws removed earlier.
9. Install new wires ties on the wires.
10. Secure the screen to the inlet duct adapter using the three screws removed earlier.

Replace the diesel heater motor and pump assembly as follows (see Figure 6):

WARNING

Mechanical and electrical hazard. Before starting the procedures to replace the motor and pump assembly, be sure the heater switch is OFF and the power cord is unplugged from the power source and the heater. Failure to observe this warning may result in injury if the fan operates or injury or death from electrical shock.

1. Remove the diesel heater motor and pump assembly as follows:
   a. Make sure the heater power switch is OFF.
   b. Make sure the heater power cord is unplugged from the power source and from the heater.
   c. Remove the fan blades. Refer to **REPLACE** and **Diesel Heater Fan Replacement**.
   d. Remove the ignition transformer but **do <u>not</u>** disconnect or cut any of the wires. Refer to **REPLACE** and **Diesel Heater Spark Plug and Transformer Testing/Replacement**.
   e. Disconnect the white, red, and black motor wires from relay terminals one (1), two (2), and three (3). (See Figure 5.)
   f. Disconnect the green wire from the motor mounting bracket.
   g. Unplug the air line from the bottom of the pump.
   h. Remove the two lock nuts that secure the motor to the motor bracket.
   i. Lift the motor and pump assembly off the motor mounting bracket and out of the inlet end of the heater.
   j. Discard the motor and pump assembly.

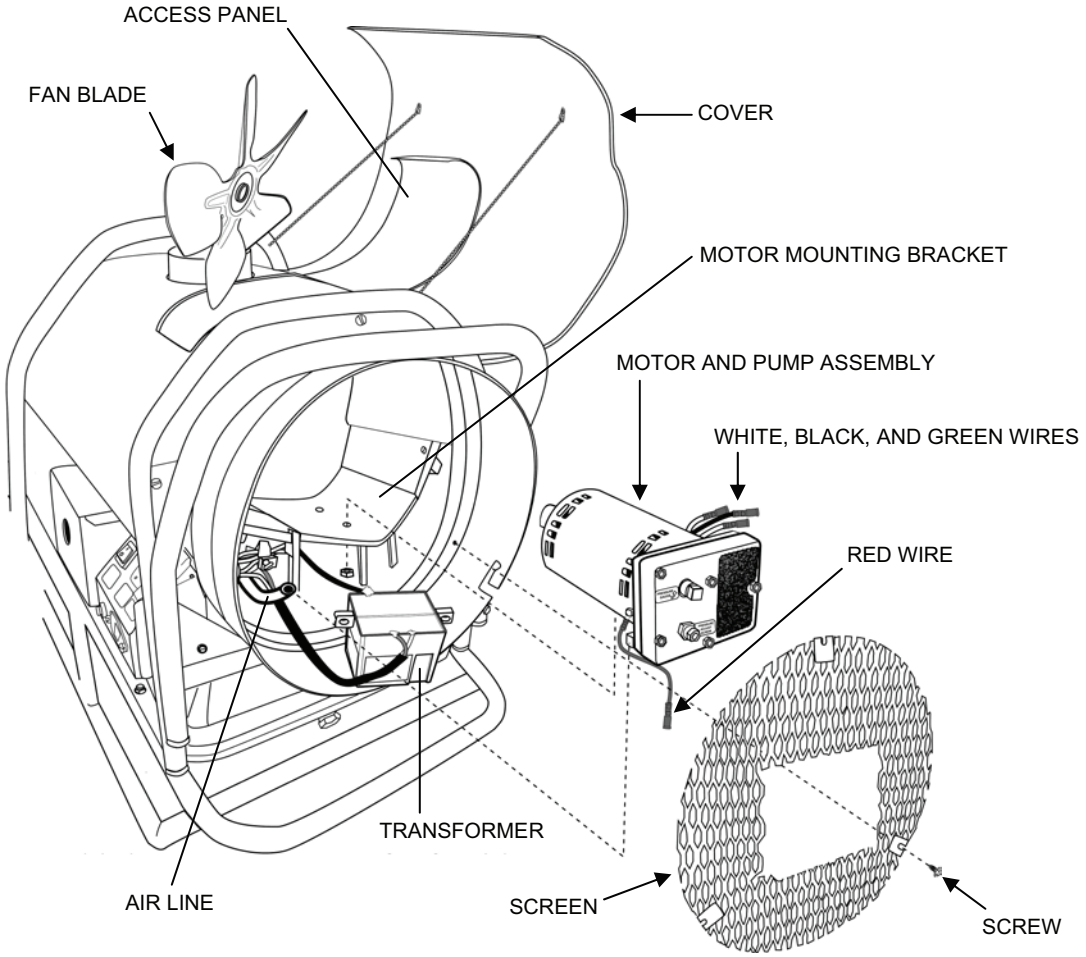

Figure 6. Diesel Heater Motor and Pump Assembly Replacement.

2. Install the new motor and pump assembly as follows:
   a. Set the motor and pump assembly on the motor mounting bracket so that the threaded studs at the bottom of the motor fit thru the holes in the bracket.
   b. Secure the motor to the bracket using the two lock nuts removed earlier.
   c. Connect the air line to the bottom of the new pump.
   d. Connect the green wire of the new motor to the motor mounting bracket, the white wire to relay terminal one (1), the red wire to relay terminal two (2), and the black wire to relay terminal three (3). (See Figure 5.)
   e. Reinstall the ignition transformer. Refer to **REPLACE** and **Diesel Heater Spark Plug and Transformer Testing/Replacement**.
   f. Reinstall the fan blades. Refer to **REPLACE** and **Diesel Heater Fan Replacement**.
3. Close the access panel.
4. Close and snap the top cover.

Diesel Heater Output Air Filter Replacement:

Part:
Diesel heater output air filter (TM 10-4610-309-23P)
Equipment condition:
Diesel heater OFF and power cord disconnected from source and from heater

Replace the diesel heater output air filter as follows (see Figure 7):

1. Remove the five screws and washers that attach the end cover to the filter housing.
2. Remove the end cover.
3. Lift the output air filter out of the filter housing and discard the filter.
4. Insert a new output air filter.
5. Reinstall the end cover using the five screws and washers.
6. Start the heater. If the heater burns improperly, it may be necessary to check and adjust the pump output pressure. Refer to **SERVICE** and **Diesel Heater Air Pump Pressure Adjustment**.

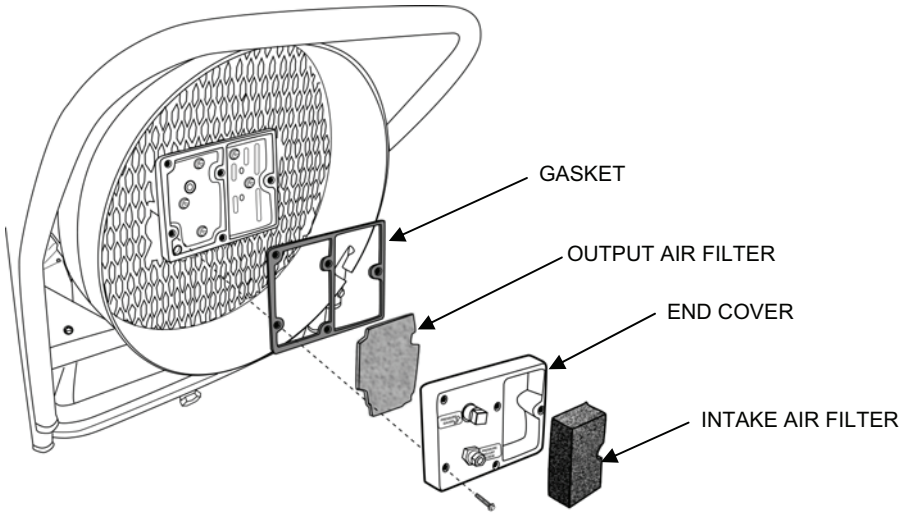

Figure 7. Diesel Heater Output Air Filter Removal.

Diesel Heater Overheat Switch Testing/Replacement:

Part:
Diesel heater overheat switch (TM 10-4610-309-23P)
Tool:
Test/ground lead comparable wire for jumping between two terminals
Equipment condition:
Diesel heater OFF and power cord disconnected from source and from heater

Test and, if necessary, replace the diesel heater overheat switch as follows:

WARNING

Electrical hazard. Before accessing the diesel heater overheat switch, be sure the heater power switch is OFF and the power cord is unplugged from the power source and the heater. Failure to observe this warning may result in injury or death from electrical shock.

1. Test the diesel heater overheat switch as follows (see Figure 8):
   a. Make sure the heater power switch is OFF and the power cord is unplugged from the power source and the heater.
   b. Remove the two screws that secure the overheat switch to its bracket on the duct outlet adapter.
   c. Unplug the two leads from the overheat switch terminals.
   d. Using a test lead, jump the white wires that were disconnected from the overheat switch terminals.

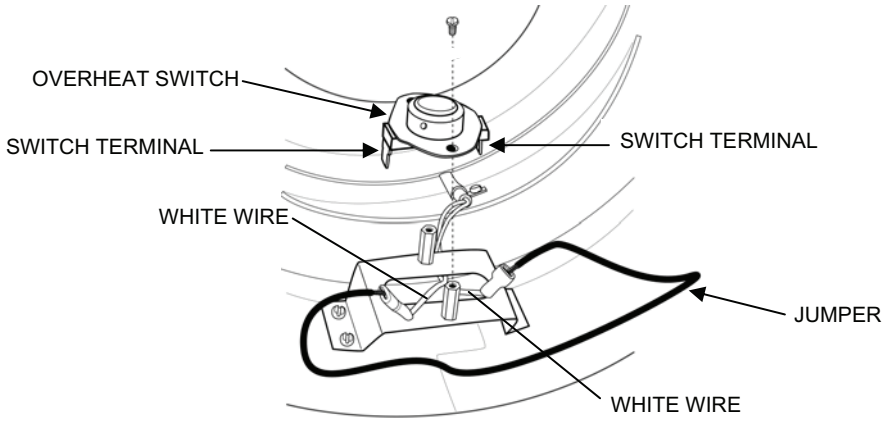

Figure 8. Diesel Heater Overheat Switch Test Set-Up.

WARNING

Electrical hazard. After restoring power to the heater to conduct the test, be extremely careful not to let any part of your person touch the spark plug, bare wires, leads, or terminals. Failure to observe this warning may result in serious injury or death from electrical shock.

e. Plug the heater power cord in first at the heater and then at the power source.
f. Switch the heater ON.
g. If the heater runs properly, install a new overheat switch.

2. Install a new overheat switch, or reinstall the existing overheat switch as follows:
   a. Turn the heater power switch OFF and unplug the power cord first from the power source and then from the heater.
   b. Plug the two white wires onto the overheat switch terminals. (It does not matter which lead is connected to which terminal.)
   c. Secure the overheat switch to its bracket on the duct outlet adapter using the two screws.

Diesel Heater Photocell Testing/Replacement:

Part:
Diesel heater photocell (TM 10-4610-309-23P)
Tool:
Multi-meter, ohmmeter, or equivalent test instrument
Equipment condition:
Diesel heater OFF and power cord disconnected from source and from heater

Test and, if necessary, replace the diesel heater photocell as follows:

WARNING

Electrical hazard. Before opening up the top cover of the diesel heater to access the photocell, be sure the heater power switch is OFF and the power cord is unplugged from the power source and the heater. Failure to observe this warning may result in injury or death from electrical shock.

1. Test the diesel heater photocell as follows (see Figure 9):
   a. Make sure the heater power switch is OFF and the power cord is unplugged from the power source and the heater.
   b. Open the top cover of the heater by unsnapping the three “screws” at the front of the cover and lifting the cover.
   c. Open the access panel at the top of the heater.
   d. Gently pull the photocell out of the bracket that is attached to burner head.
   e. Tag and disconnect the blue and white photocell leads.
   f. Connect the ohmmeter test leads to the photocell leads.
   g. Hold the open end of photocell towards a light source (a 60 watt light bulb or direct sunlight). The resistance indicated on the ohmmeter should be low.
   h. Block off light completely by covering the open end of the photocell. Within 10 seconds the resistance indicated should be high.

i. Replace the photocell with a new photocell if there is no change in resistance during this procedure.

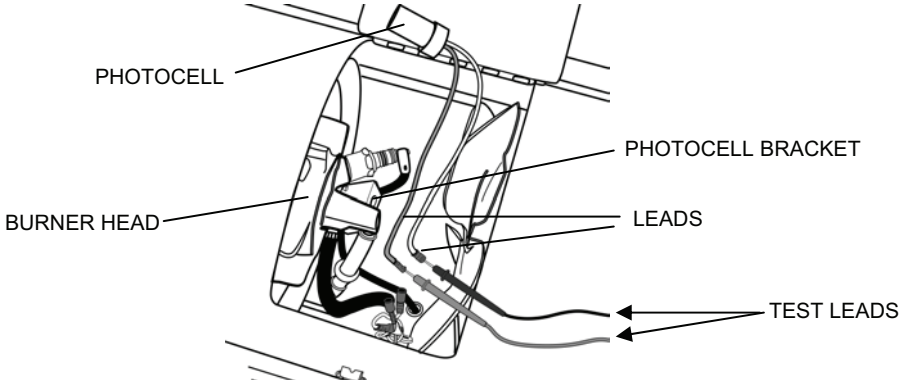

Figure 9. Diesel Heater Photocell Test Set-Up.

2. Install a new photocell, or reinstall the existing photocell as follows:
   a. Connect the blue and white leads of the new or existing photocell to the tagged wires.
   b. Gently reinsert the photocell all the way in to its holding bracket.
   c. Close the access panel.
   d. Close and snap the top cover.

Diesel Heater Safety Control Assembly Testing/Replacement:

Part:
Diesel heater safety control assembly (TM 10-4610-309-23P)
Tool:
Multi-meter, voltmeter and ohmmeter, or equivalent test instrument
Equipment condition:
Diesel heater OFF and power cord disconnected from source and from heater

Test and, if necessary, replace the diesel heater safety control assembly when the diesel heater will not start.

Test the diesel heater safety control assembly as follows (see Figure 10):

WARNING

Electrical hazard. Before working on the safety control, be sure the heater power switch is OFF and the power cord is unplugged from the power source and the heater. Then, when power is required, be extremely careful not to let any part of your person touch the spark plug, bare wires, leads, or terminals. Failure to observe this warning may result in serious injury from electrical shock.

1. Make sure the heater power switch is OFF and the power cord is unplugged from the power source and the heater.
2. Remove the 4 screws that secure the electric control box to its bracket.
3. Pull the electric control box away from the electrical panel but do not disconnect any electrical connections.

WARNING

Electrical hazard. After restoring power to the heater to conduct the test, be extremely careful not to let any part of your person touch the spark plug, bare wires, leads, or terminals. Failure to observe this warning may result in serious injury or death from electrical shock.

a. Plug the heater power cord in first at the heater and then at the power source.
b. Switch the heater ON.
c. Touch one test lead of a voltmeter to any one of the white leads on the distribution bar.
d. Touch the second voltmeter test lead first to the orange wire on the left side of the distribution bar. You should get a reading of 110 volts from a good safety control.
e. Then touch the second voltmeter test lead to the blue wire on the left side of the distribution bar. You should get a reading of 110 volts from a good safety control.
f. If one or both wires do not read 110 volts (approximately) replace the safety control assembly.
g. Turn the heater OFF.
h. Unplug the heater power cord first from the power source and then from the heater.
i. If the safety control assembly does not need to be replaced, reattach the electric control box to its bracket using the 4 mounting screws.

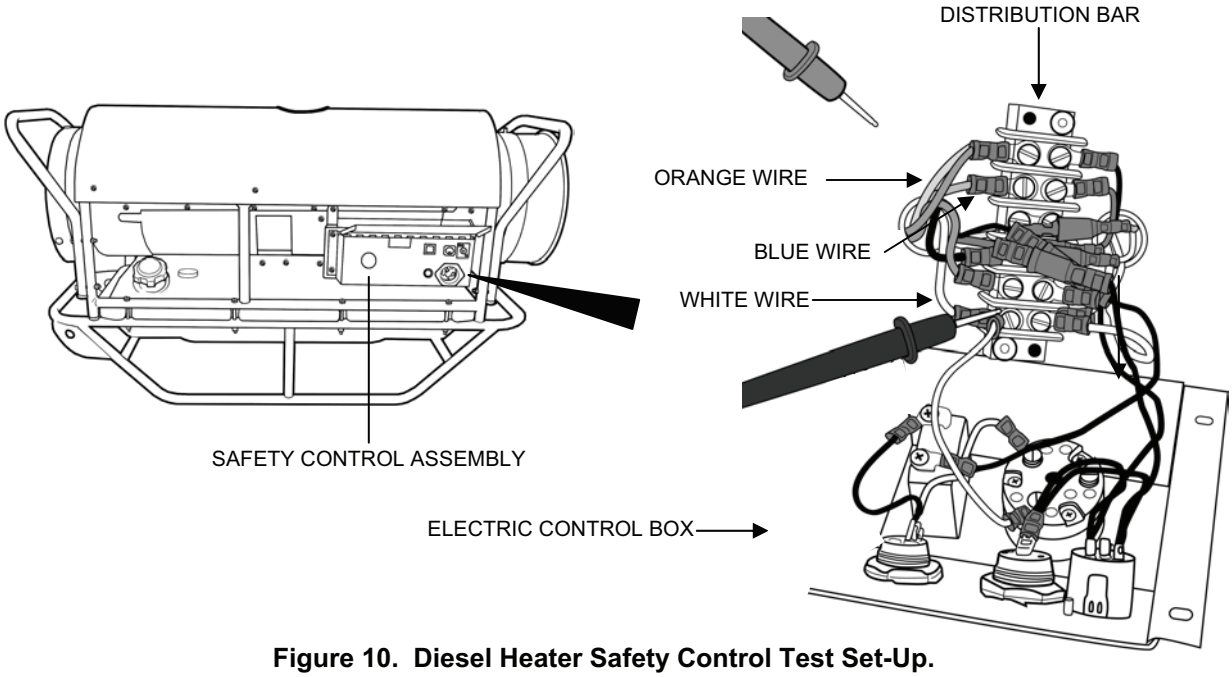

Figure 10. Diesel Heater Safety Control Test Set-Up.

Replace the diesel heater safety control assembly as follows:

WARNING

Electrical hazard. Before removing the diesel heater safety control assembly, be sure the heater power switch is OFF and the power cord is unplugged from the power source and the heater. Failure to observe this warning may result in serious injury from electrical shock.

1. Make sure the heater power switch is OFF.
2. Make sure the heater power cord is unplugged from the power source and from the heater.
3. Remove the diesel heater safety control assembly as follows (see Figure 11):
   a. Remove the four screws and washers holding the control box assembly to its bracket.
   b. Remove the four screws holding the safety control assembly to its bracket.
   c. Remove the four screws and one bolt holding the bracket to the heater frame. (One corner of the bracket remains riveted to the heater.)
   d. Pull the bracket away from the heater enough to access the wires behind the bracket.
   e. Tag and disconnect the four wires from the terminals on the safety control assembly.
   f. Trace the four wires that come out the back of the safety control assembly to the distribution bar and disconnect the wires from the distribution bar. Leave all other wires connected to the distribution bar.
   g. Carefully pull the wires through both holes in the bracket.
   h. Discard the safety control assembly.

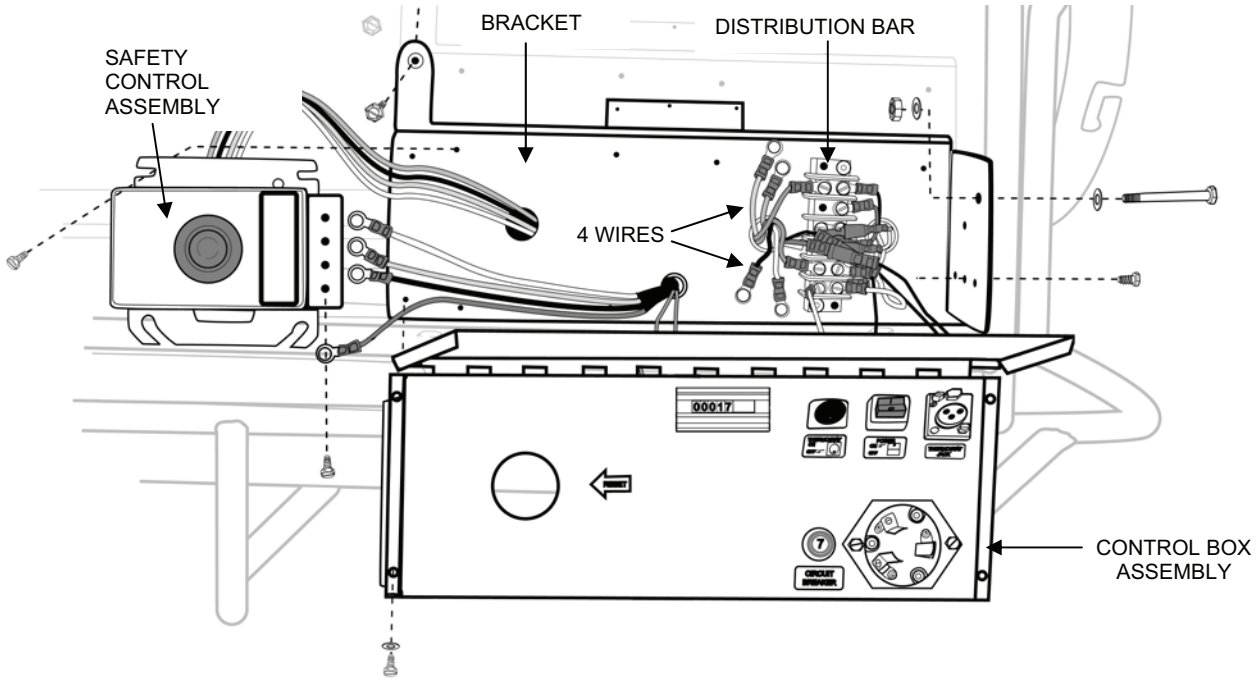

Figure 11. Diesel Heater Safety Control Assembly Replacement.

4. Install the new diesel heater safety control assembly as follows:
   a. Thread the four wires from the back of the new safety control assembly through the two holes of the bracket.
   b. Connect the four safety control wires to the distribution bar as shown in the wiring diagram in Figure 12.
   c. Secure the bracket to the heater frame using the four screws and one bolt.
   d. Connect the four tagged wires to the terminals on the new safety control assembly as shown in the wiring diagram in Figure 12.

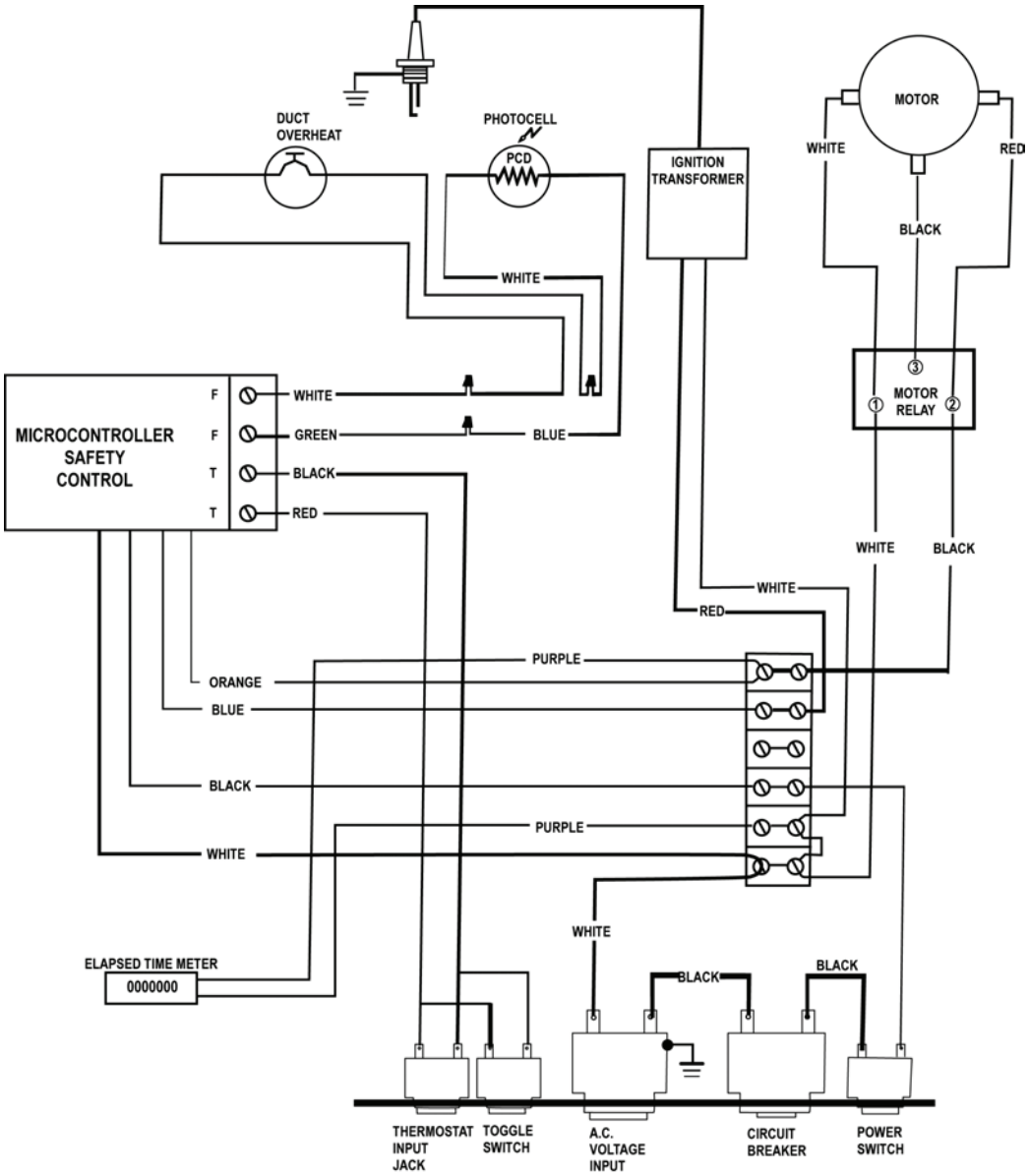

Figure 12. Diesel Heater Safety Control Wiring Diagram.

e. Secure the safety control assembly to the bracket using the four screws removed earlier.
f. Secure the control box assembly to the bracket using the four screws and washers removed earlier.

NOTE

After the safety control is replaced, the operation of the safety control should be checked before starting the heater by testing for conductance at the ignition transformer.

5. Check the operation of the safety control as follows (see Figure 13):

WARNING

Electrical hazard. A transformer in good condition produces very high voltage at the output terminals. Before accessing the transformer, be sure the heater power switch is OFF and the power cord is unplugged from the power source and the heater. Failure to observe this warning may result in serious injury from electrical shock.

a. Make sure the heater power switch is OFF and the power cord is unplugged from the power source and the heater.
b. Remove the screen from the inlet end of heater.
c. Tag and disconnect the red and white transformer wires from the red and white ignition wires.

WARNING

Electrical hazard. After restoring power to the heater to check the operation of the safety control, be extremely careful not to let any part of your person touch the spark plug, bare wires, leads, or terminals. Failure to observe this warning may result in serious injury or death from electrical shock.

d. Plug the heater power cord in first at the heater and then at the power source.
e. Switch the heater ON.
f. **DO NOT TOUCH any bare wires, leads, or terminals with any part of your person.** Touch ohmmeter test probes to the red and white transformer wires.
g. If the new safety control is working properly, the ohmmeter should indicate an open line (no conductance).
h. If the ohmmeter does not indicate an open line, retest the safety control.
i. Turn the heater OFF.
j. Unplug the heater power cord first from the power source and then from the heater.
k. Reconnect the red and white ignition and transformer wires.
l. Reinstall the screen to the inlet end of heater.

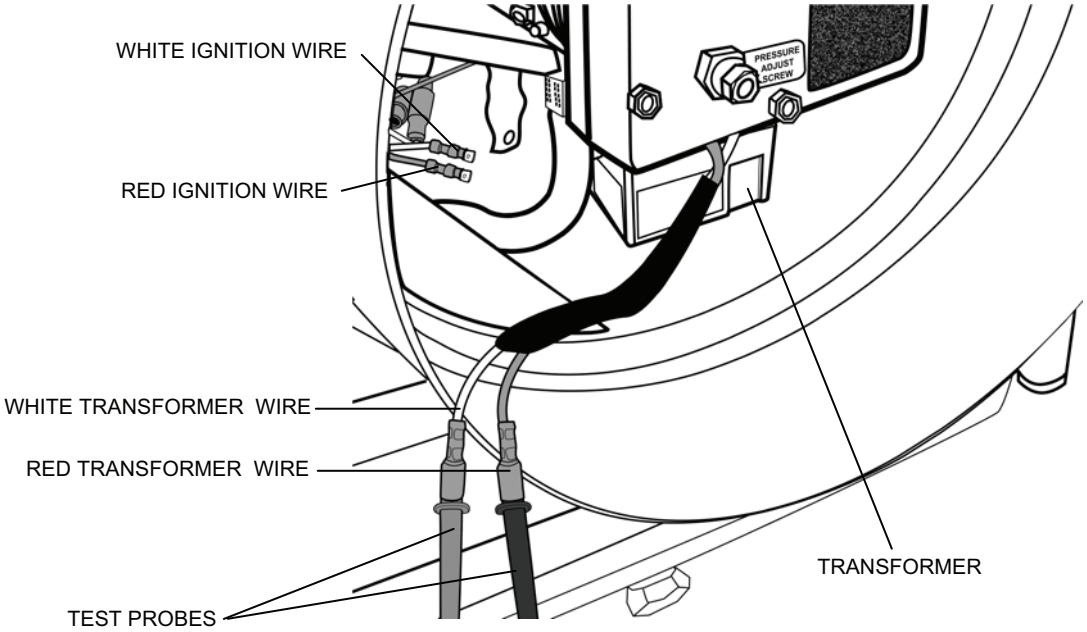

Figure 13. Diesel Heater Safety Control Operation Test Set-Up.

Diesel Heater Spark Plug and Transformer Testing/Replacement:

Parts (TM 10-4610-309-23P):
- Diesel heater spark plug
- Diesel heater ignition transformer

Tool:
- Test/ground lead with alligator clips or comparable wire for grounding the spark plug

Material:
- Wire nut
- Electrical tape

Equipment condition:
- Diesel heater OFF and power cord disconnected from source and from heater

Test and, if necessary, replace the diesel heater spark plug and ignition transformer when the heater will not ignite, but the motor runs for a short time.

WARNING

Electrical hazard. A transformer in good condition produces very high voltage at the output terminal. The spark plug wire carries high voltage during heater operation. Before opening up the top cover of the diesel heater to access the spark plug, be sure the heater power switch is OFF and the power cord is unplugged from the power source and the heater. Then, when power is required, be extremely careful not to let any part of your person touch bare wires, leads, or terminals. Failure to observe this warning may result in injury or death from electrical shock.

1. Remove the diesel heater spark plug as follows:
   a. Make sure the heater power switch is OFF.
   b. Make sure the heater power cord is unplugged from the power source and from the heater.
   c. Open the top cover of the heater by unsnapping the three “screws” at the front of the cover and lifting the cover.
   d. Open the access panel at the top of the heater.
   e. Disconnect the spark plug wire.
   f. Remove the spark plug using a socket wrench.
2. Test the diesel heater spark plug and transformer as follows (see Figure 14):
   a. Check the gap between the spark plug electrodes. The gap should be between 0.045 and 0.055.
   b. Adjust the gap between the electrodes if necessary by bending the outside electrode.
   c. Reattach the spark plug wire to the spark plug.
   d. Establish a good ground between the spark plug and the heater. Be careful not to let any part of your person become a portion of the grounded circuit.

WARNING

Electrical hazard. After restoring power to the heater to conduct the test, be extremely careful not to let any part of your person touch the spark plug, bare wires, leads, or terminals. Failure to observe this warning may result in serious injury or death from electrical shock.

   e. Connect the heater power cord in first at the heater and then at the power source.
   f. Set the thermostat switch on the electric control box to the “ON” position.
   g. Switch the heater ON. Sparks should appear between the plug’s electrodes. If the ground is good and a spark does NOT jump between the electrodes, replace the spark plug as described in the next step.

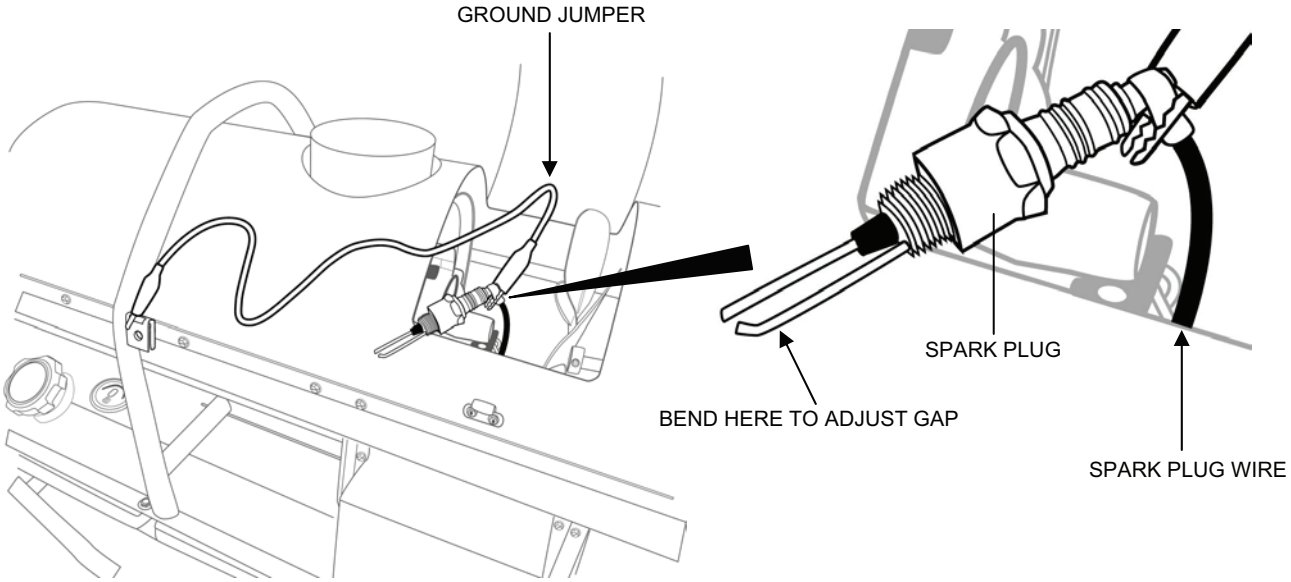

Figure 14. Diesel Heater Spark Plug / Transformer Test Set-Up.

3. Replace the diesel heater spark plug as follows:
    a. Switch the heater OFF.
    b. Unplug the heater power cord first from the power source and then from the heater.
    c. Remove the ground from the spark plug.
    d. Unplug the spark plug from the spark plug wire and discard the spark plug.
    e. Test a new diesel heater spark plug and the existing transformer by repeating the test steps above.
    f. If a spark still does not appear between the plug's electrodes, the transformer may be defective. First, install the spark plug then replace the transformer (both procedures are described below.)
4. Install the spark plug as follows:
    a. Switch the heater OFF.
    b. Unplug the heater power cord first from the power source and then from the heater.
    c. Remove the ground from the spark plug.
    d. Screw the spark plug into the burner head.
    e. Tighten snug tight using the socket wrench. (Do not over-tighten.)
    f. Reconnect the spark plug wire to the spark plug.
    g. Close the access panel.
    h. Close and snap the top cover.
5. Remove the old diesel heater transformer as follows:
    a. Make sure the heater is switched OFF.
    b. Make sure the heater power cord is unplugged first from the power source and then from the heater.
    c. Remove the three screws that secure the screen to the inlet duct adapter and remove the screen.

d. Remove the two screws that secure the transformer to its mounting bracket inside the inlet end of the heater shell and gently pull the transformer out as far as the wires will reach. (If the wires are bound with a plastic tie-wrap, it may be necessary to clip the tie-wrap.) (See Figure 15)
e. Tag and disconnect the red and white transformer wires.
f. From the transformer end of the spark plug wire, pull the spark plug wire through the bushing in the bottom of the lower housing until there is enough wire at the inlet end of the heater to work with.
g. Cut the spark plug wire close to where it enters the old transformer.
h. Remove the transformer.

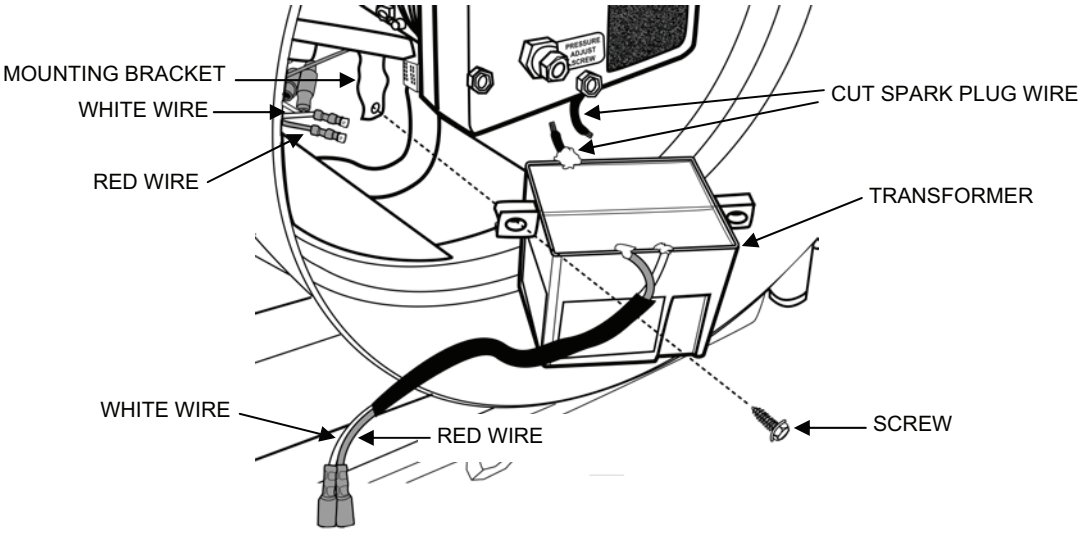

Figure 15. Transformer Replacement.

6. Install the new diesel heater transformer as follows.
   a. Cut the spark plug wire on the new transformer several inches from the transformer.
   b. Strip about one-half inch of insulation off the end of the spark plug wire on the new transformer and from the end of the spark plug wire remaining in the heater.
   c. Connect the two wires together using a suitable wire nut and tape with electrical tape.
   d. Carefully pull enough spark plug wire up through the inside of the heater housing to connect the wire to the spark plug and connect the spark plug wire to the spark plug.
   e. Connect the new transformer red and white wires to the tagged red and white wires.
   f. Make sure the new transformer mounting tabs are free of paint to ensure a good ground connection when the transformer is installed.
   g. Secure the new transformer to its bracket using the two screws.
   h. Secure the screen to the inlet duct adapter with the three screws.

General Purpose Transformer Electrical Outlet Assembly or Power Cord Replacement:

Part (TM 10-4610-309-23P):
General Purpose Transformer Electrical Outlet Assembly
General Purpose Transformer Power Cord
Equipment Condition:
TWPS in Standby Shutdown without Draining
Air Compressor switched to OFF
PDP Main Circuit Breaker switched to OFF

Replace the general purpose transformer electrical outlet assembly or power cord as follows:

WARNING

Electrical hazard. Make sure the PDP Main Circuit Breaker is switch to OFF before unplugging the general purpose transformer power cord from the PDP. Failure to observe this warning may result in serious injury or death from electrical shock.

1. Make sure the TWPS is in Standby Shutdown without Draining.
2. Make sure the air compressor is switched to OFF.
3. Make sure the PDP Main Circuit Breaker is switched to OFF.
4. Remove the general purpose transformer from the TWPS as follows (see Figure 16):
   a. If the diesel heater is plugged into the transformer outlet, make sure the diesel heater is switched to OFF, then unplug the heater.
   b. Disconnect the general purpose transformer power cord cannon plug from the connector on the right side of the Power Distribution Panel (PDP).
   c. Lift the general purpose transformer off the TWPS frame and set it down in a clean work location.

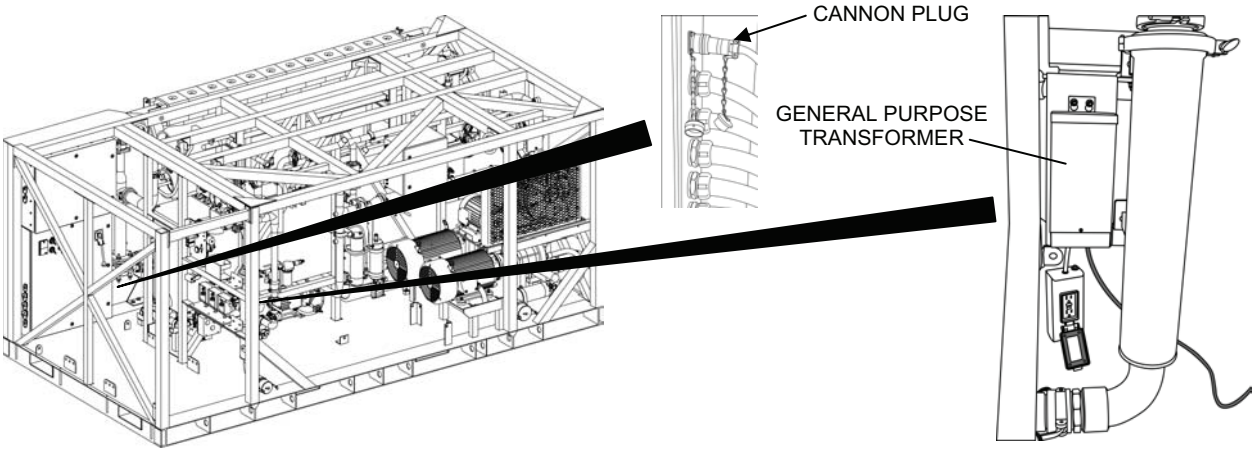

Figure 16. General Purpose Transformer Removal.

5. Disconnect the electrical outlet assembly cable or power cable from the transformer as follows (see Figure 17):
    a. Remove the 20 screws and 20 flat washers from the transformer enclosure cover and remove the cover.
    b. Remove the one screw from the transformer cover and lift the cover off the transformer.
    c. Pull the wires out of the enclosure for the cable to be disconnected.
    d. Tag and disconnect the cable wires.
    e. Unscrew the ring nut from the cable strain relief fitting at the bottom of the transformer enclosure for the cable to be removed.
    f. Pull the cable out through the transformer and the transformer enclosure fittings.
    g. Retain the washer and wire bushing.

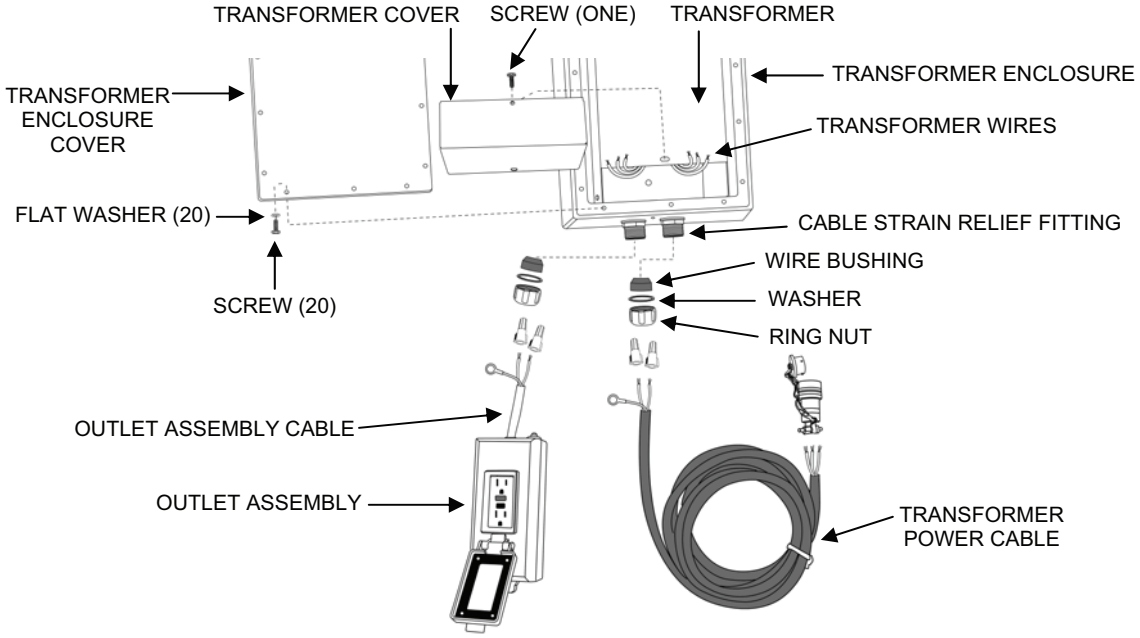

Figure 17. General Purpose Transformer Cable Removal.

6. Connect the new electrical outlet assembly cable or power cable from the transformer as follows (see Figure 17):
    a. Slide the ring nut over the cable. Ensure proper orientation.
    b. Slide the washer over the cable.
    c. Slide the wire bushing over the cable. Ensure proper orientation.
    d. Feed the cable through the fittings in the transformer enclosure and transformer.
    e. Connect the cable wires to the transformer wires and ground connection according to the tags.
    f. Slide the wire bushing and washer up to the cable strain relief fitting and secure with the ring nut.
    g. Push the connected wire ends into the box.
    h. Secure the transformer cover to the transformer using the one screw.
    i. Secure the enclosure cover to the transformer enclosure using the 20 screws and 20 flat washers.

SERVICE

Diesel Heater Air Pump Pressure Adjustment:

Tools:
0-10 psig pressure gauge
Equipment condition:
Diesel heater OFF and power cord disconnected from source and from heater

Adjust the diesel heater air pump pressure as follows (see Figure 18):

1. Remove the plug from the air filter housing.
2. Install the pressure gauge into the hole.
3. Start the heater (it is not necessary to have fuel in the tank for this pressure check and adjustment.)
4. Pump pressure should read five psi, plus or minus one-quarter psi. If the pressure is not within this range, adjust the pressure relief valve as follows:
   a. Loosen the lock nut.
   b. Screw the pressure adjust screw in to raise the pressure; out to lower the pressure.
   c. Tighten the lock nut.
5. Turn the heater OFF
6. Remove the gauge.
7. Reinstall the plug.

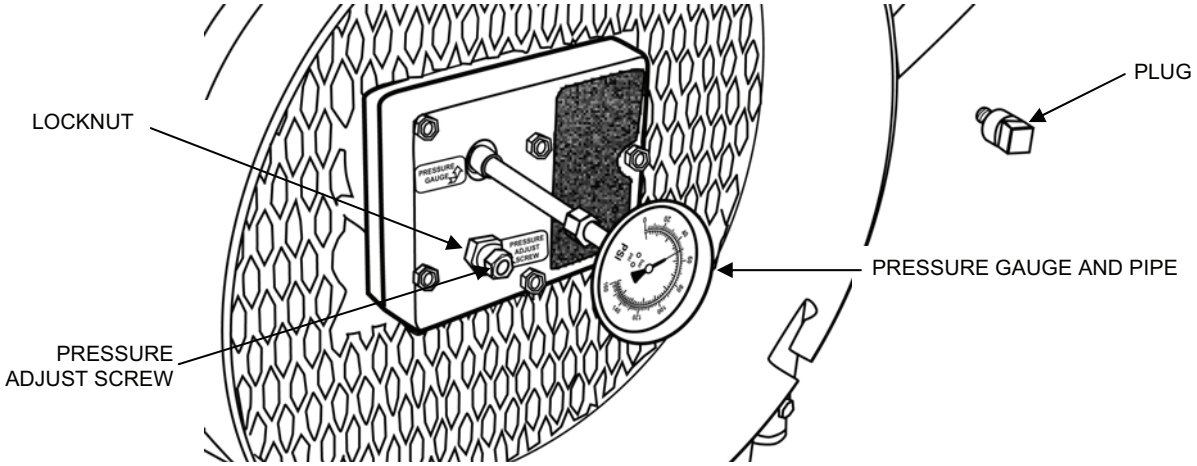

Figure 18. Diesel Heater Air Pump Pressure Adjustment.

END OF WORK PACKAGE

TACTICAL WATER PURIFICATION SYSTEM (TWPS) FIELD MAINTENANCE PROCEDURES FLAT RACK AND TACTICAL QUIET GENERATOR

0026 00

+THIS SECTION COVERS:
Replace, Service

INITIAL SETUP

Maintenance Level
Field
Tools
Army: General Mechanic's Tool Kit (WP 0037)
Marine Corps: Common No. 1 Tool Set (WP 0037)
Reference
Refer to TM 10-4610-309-23P for repair parts information
Refer to TM 9-6115-672-14 for TQG Field Maintenance procedures
Personnel Required
One
Equipment Condition
These repairs can be performed regardless of the condition of the TWPS

GENERAL:

This work package contains information and instructions for replacing A-TWPS flat rack latches and seals and for lowering the A-TWPS bail bar in order to access and service components in the TQG diesel engine compartment. The procedures covered in this work package include:

- Latch Replacement
- Seal Replacement
- Lowering and Raising the Bail Bar

Refer to TM 9-6115-672-14 for TQG Field Maintenance procedures.

REPLACE

Latch Replacement:

Parts (TM 10-4610-309-23P):
Flat rack latch
Gasket
Equipment Condition:
This procedure can be performed regardless of the condition of the TWPS

Replace flat rack latches as follows (see Figure 1):

1. Remove the bolt and retaining plate from the back of the latch.
2. Pull the latch assembly and gasket out through the front of the flat rack panel.
3. Insert a new latch and gasket in through the front of the panel ensuring that the latch points toward the outer edge of the panel.
4. Secure the latch with the retaining plate and bolt removed earlier.

NOTE
Do not tighten the bolt so tight that the retaining plate bows, otherwise the latch will not function.

5. Tighten the bolt snug tight.
6. Check the operation of the latch. Loosen the bolt if the latch does not function.

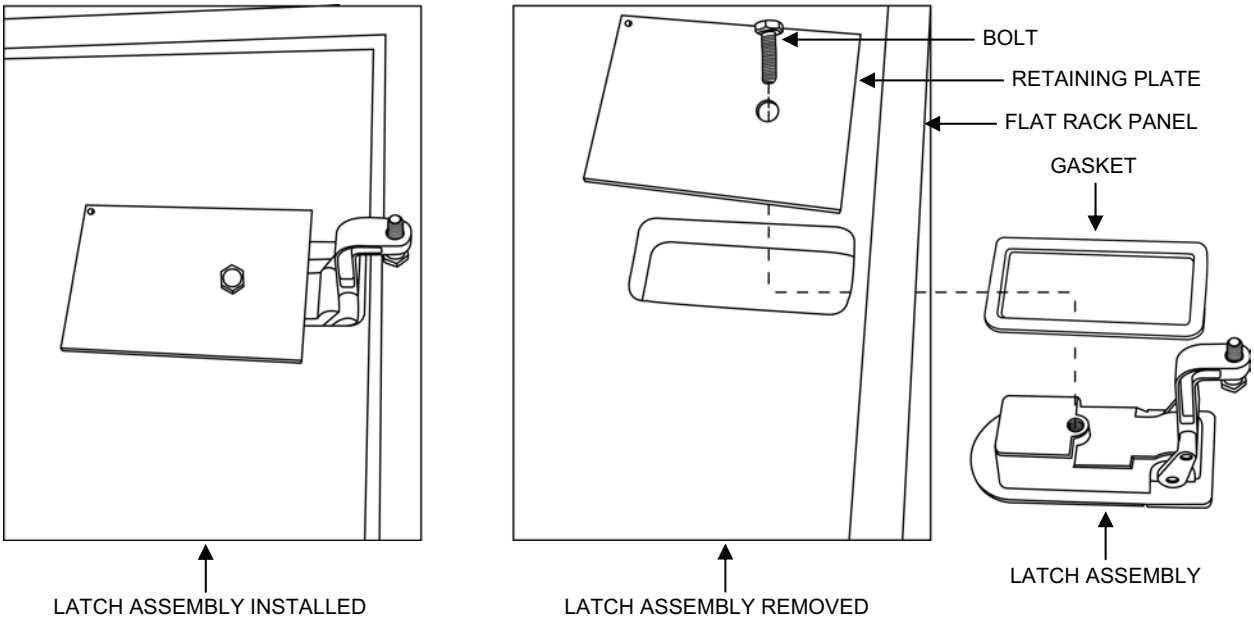

Figure 1. Flat Rack Latch Replacement.

Seal Replacement:

Parts (TM 10-4610-309-23P):
Seal, channel, flat rack
Seal, self-adhering, flat rack
Seal, flat, flat rack
Equipment Condition:
This procedure can be performed regardless of the condition of the TWPS

1. Replace flat rack channel seals as follows (see Figure 2):
   a. Pull the old seal off the flat rack.
   b. Cut new seal to length from bulk.
   c. Press the new seal in place.

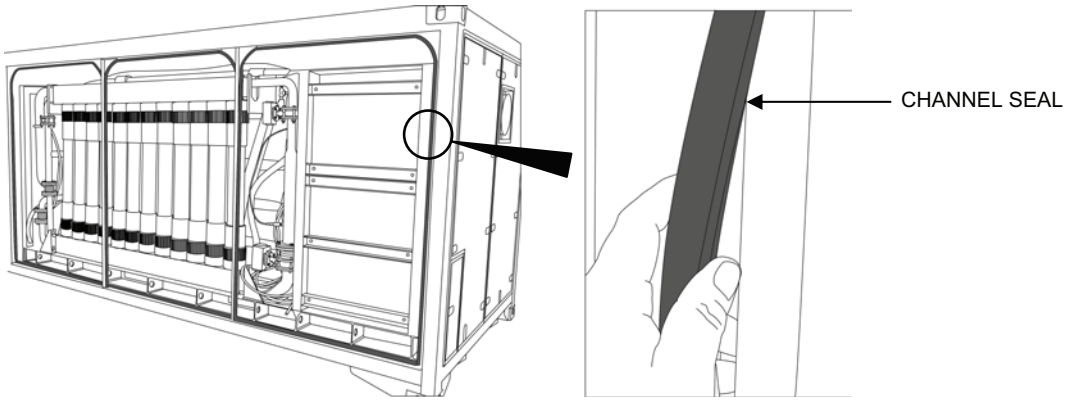

Figure 2. Flat Rack Channel Seal Replacement.

2. Replace flat rack self-adhering seals as follows (see Figure 3):
   a. Note the orientation of the existing seal.
   b. Pull the old seal off the flat rack.
   c. Cut new seal to length from bulk.
   d. Orient the seal where it is to be installed on the flat rack.
   e. Remove the protective paper strip from the seal.
   f. Press the adhesive side of the seal to the TWPS surface.

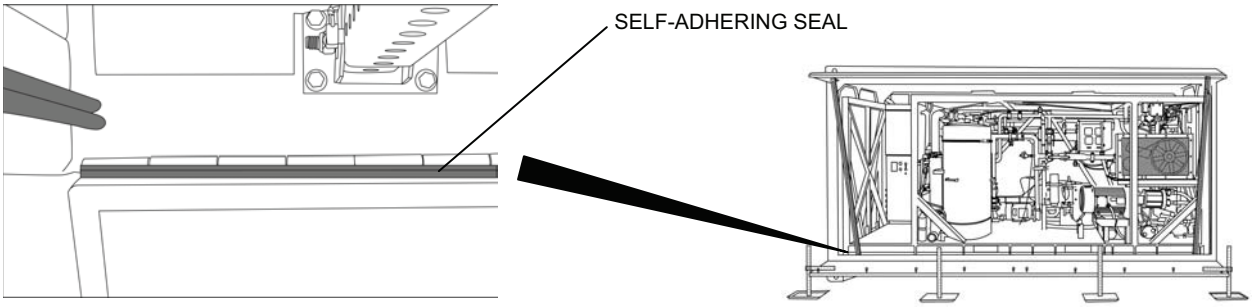

Figure 3. Flat Rack Self-Adhering Seal Replacement.

3. Replace the flat rack flat seal as follows (see Figure 4):

WARNING

Potential for head and eye injury. Make sure that two people are holding up the hinged top panel before removing the retaining pins from the top panel supports. Failure to observe this warning could result in the top panel falling down suddenly, resulting in head injury or the possibility of a top panel latch causing eye injury.

a. While two people hold up the hinged top panel, the third person removes the retaining pins from the top panel supports.
b. Carefully lower the top panel and latch it shut. Insert and secure the two retaining pins to an accessible part of the supports.
c. Remove the 21 flat head screws that secure three flat bars and the flat seal to the flat rack.
d. Remove the three flat bars.
e. Remove the old flat seal.
f. Cut a new flat seal to length from bulk.
g. Punch holes along the top edge of the new seal to match the screw holes in the flat rack.
h. Position the new seal and one of the flat bars in place on the flat rack.
i. Secure the flat bar and seal to the flat rack using 7 of the flat head screws.
j. Secure the other two flat bars and remaining length of the flat seal to the flat rack in the same manner.

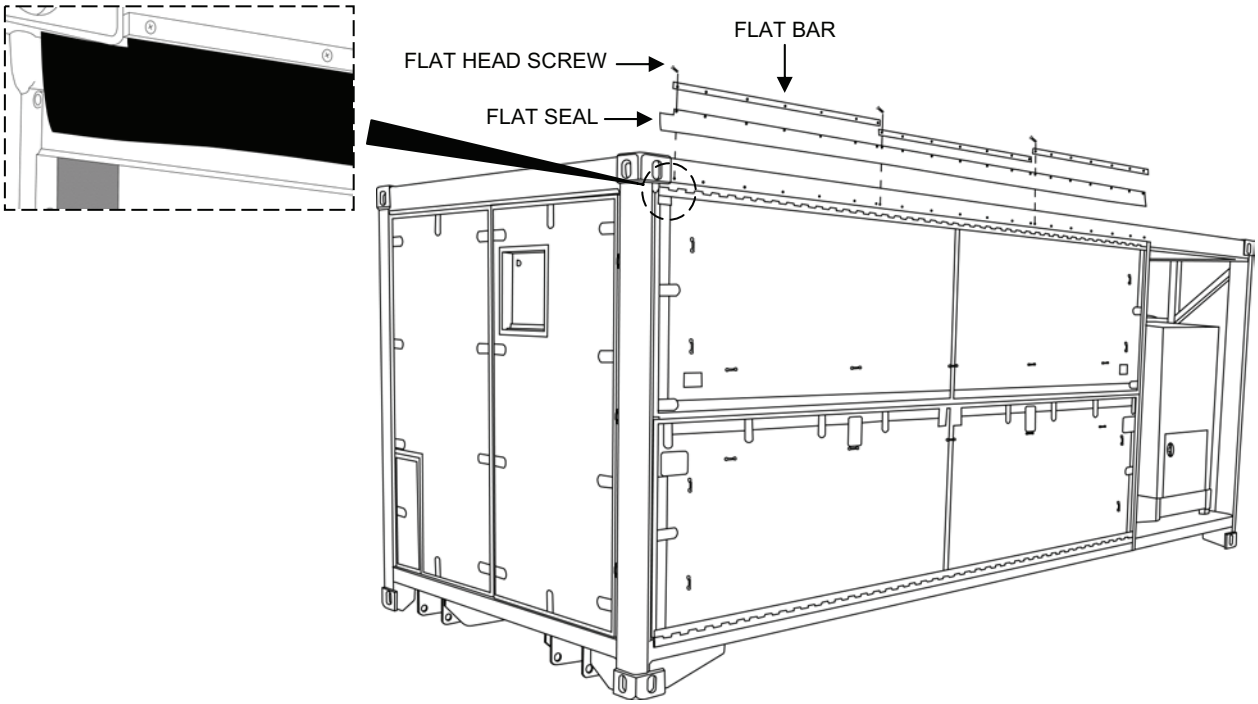

Figure 4. Flat Rack Flat Seal Replacement.

SERVICE

Lowering and Raising the Bail Bar:

Tool:
Wrench, Bail Bar, aluminum (BII)
Equipment Condition:
Tactical Quiet Generator shut down

1. Lower the flat rack bail bar as follows:

WARNING

Crushing hazard. Always attach the winch cable hook to the bail bar ring before removing any bolts from the bail bar. Failure to observe this warning could result in the bail bar falling down unrestrained, killing anyone underneath it.

a. Attach the winch cable hook onto the ring near the top of the bail bar (see Figure 5).

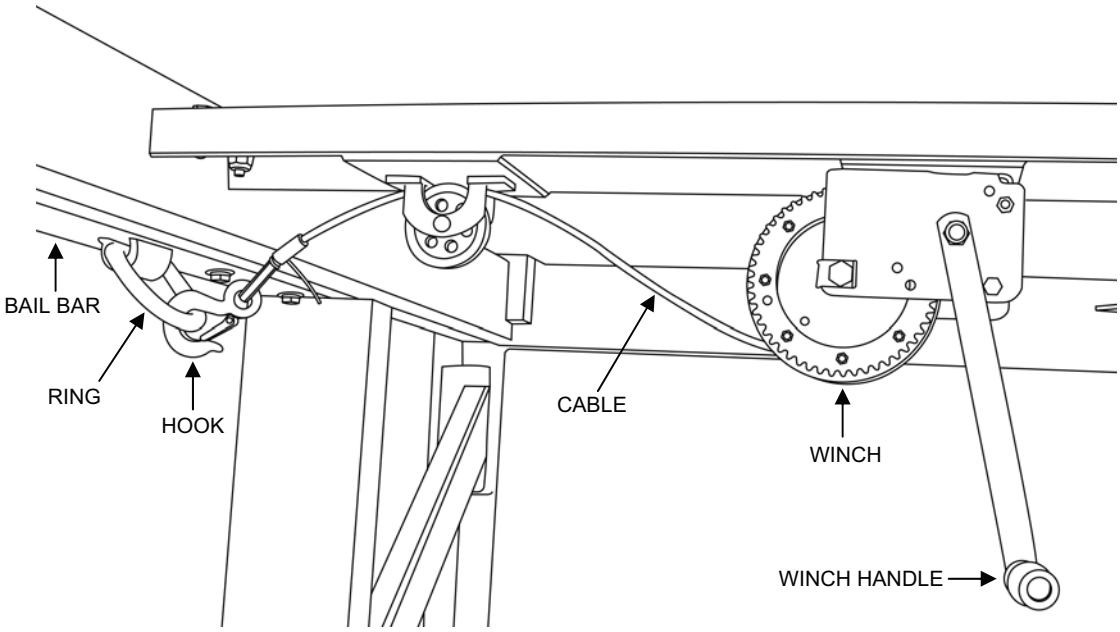

Figure 5. Winch Cable Hook Attached to Bail Bar Ring.

b. Remove the hardware that secures the bail bar to the flat rack as follows (see Figure 6):
   1) Remove the eleven bolts, lock washers, and flat washers that secure the bail bar to the top horizontal beam of the flat rack.
   2) Remove the four bolts, eight flat washers, four lock washers, and four nuts that secure the bail bar to the diagonal beam of the flat rack.
   3) Insert the flat end of the pinch bar between the large back nut and the flat rack frame at the bottom of the flat rack.
   4) Unscrew the bolt out of the nut using the bail bar socket wrench. Retain the bolt, lock washer and nut.
   5) Remove the back bolt, lock washer and nut at the other side of the bail bar in the same manner.

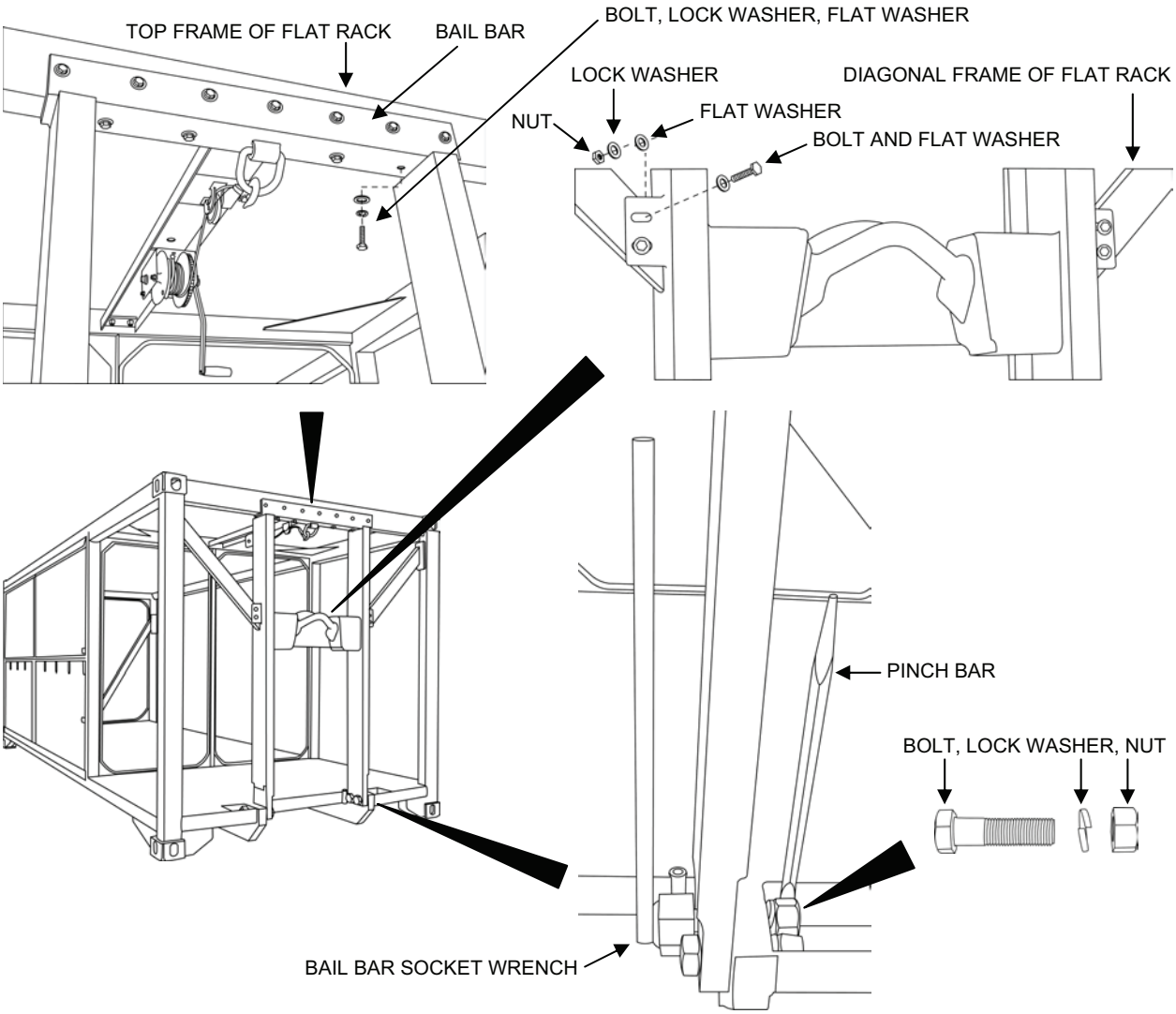

Figure 6. Removing the Bolts from the Bail Bar.

c. Turn the winch crank handle to lower the bail bar to the desired position (see Figure 7).
d. Disconnect the cable and move it out of the way so it is not a hazard.

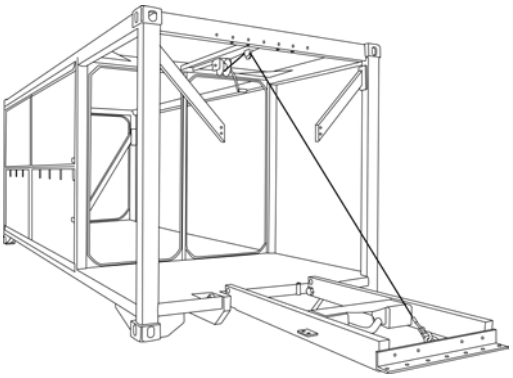

Figure 7. Flat Rack Bail Bar Lowered.

2. Raise and secure the bail bar as follows:
   a. Turn the winch crank handle to raise the bail bar.

NOTE

Installing the two large bolts, lock washers, and nuts at the bottom of the bail bar first helps align the holes for the other bolts and makes the other bolts easier to install.

   b. Install the two large bolts, lock washers, and nuts that secure the bottom of the bail bar to the flat rack (see Figure 6).

WARNING

A minimum of 6 bolts in the front of top horizontal beam of the flat rack and a minimum of 3 bolts in the underside of the top horizontal beam are required in order to safely lift the flat rack by the bail bar. Failure to observe this warning may result in equipment damage and severe injury or death.

CAUTION

The middle and upper bail bar bolts must be installed in their proper locations. There are three different length bolts that are used. The longest of the three is used with washers and nuts to secure the bail bar to the diagonal beam of the flat rack. The other two shorter bolts thread into rivet nuts, which are threaded inserts in the top horizontal beam of the flat rack. Installing the wrong length bolt into a rivet nut may loosen the rivet nut causing it to turn inside the beam. If this happens, it will not be possible to remove the bolt as the rivet nut will turn with the bolt.

c. Separate the three different size bolts that are used to secure the middle of the bail bar to the diagonal beam of the flat rack and the top of the bail bar to the top horizontal flat rack beam (see Figure 8).
d. Loosely secure the top part of the bail bar to the front of the top horizontal flat rack beam using the seven short bolts with their lock washers and flat washers. Do NOT tighten yet.
e. Loosely secure the top part of the bail bar to the underside of the top horizontal flat rack beam using the four longer bolts with their lock washers and flat washers. Do NOT tighten yet.
f. Secure the middle of the bail bar to the diagonal flat rack beam of the using the four longest bolts with eight flat washers, four lock washers, and four nuts.
g. Tighten all 15 bolts. Torque to 250 in-lbs.

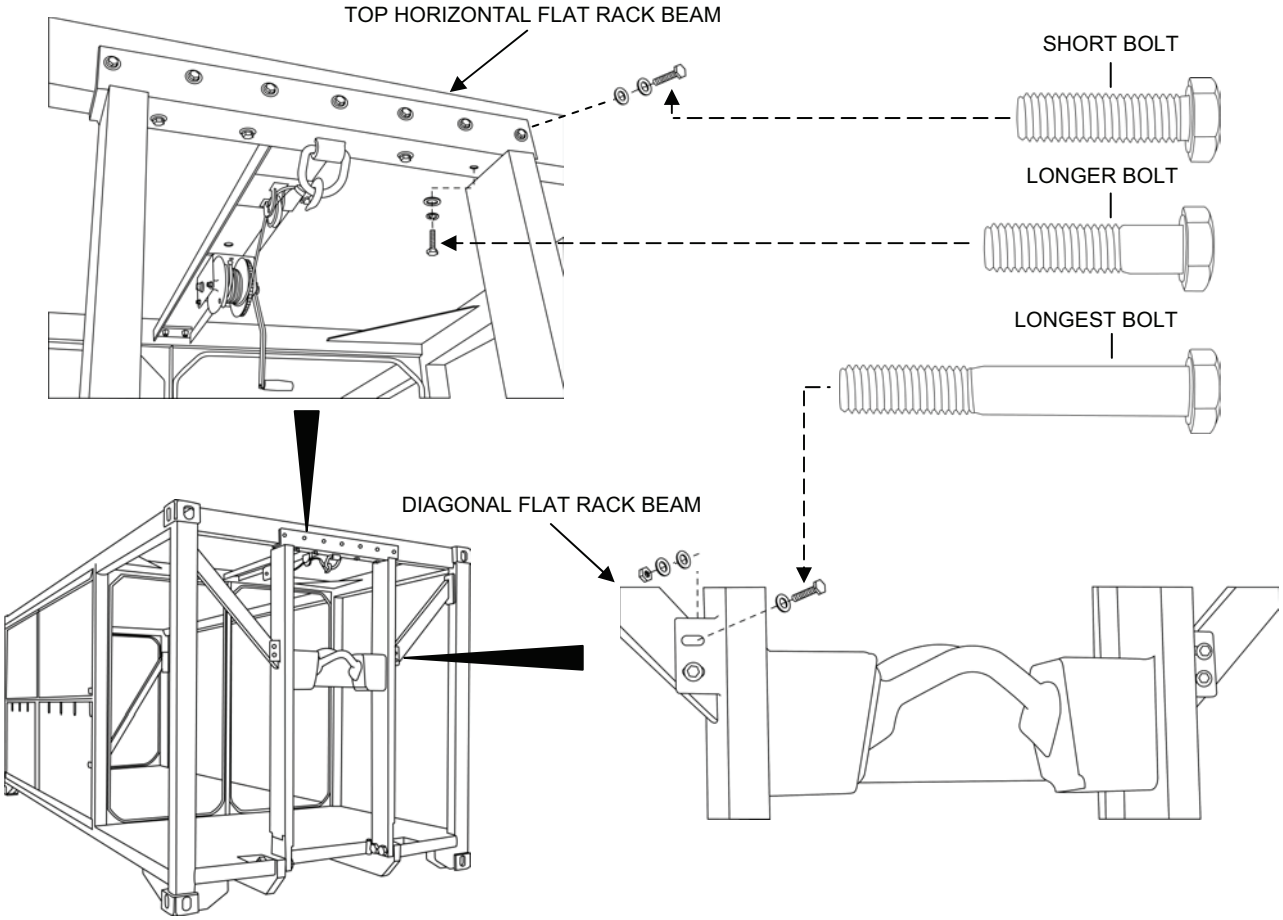

Figure 8. Correct Bail Bar Bolt Installation Locations.

END OF WORK PACKAGE

TACTICAL WATER PURIFICATION SYSTEM (TWPS) FIELD MAINTENANCE PROCEDURES GENERAL MAINTENANCE

0027 00

THIS SECTION COVERS:
Replace, Repair, Assembly

INITIAL SETUP:

Maintenance Level
Field
Tools
Army: General Mechanic's Tool Kit (WP 0037)
Marine Corps: Common No. 1 Tool Set (WP 0037)
Reference:
Refer to TM 10-4610-309-23P for repair parts information
Personnel Required
One
Equipment Condition
TWPS in Standby Shutdown

GENERAL:

This work package contains information and instructions for replacing, repairing, and assembling components common to a number of TWPS systems. The procedures covered include:

- Clamped-On Hose Replacement
- Compression Fitting Connected Hose Replacement
- Push-On Hose Replacement
- Tube Fitting-Connected Tube Replacement
- Welded Ball Valve Replacement
    - MF Clean Feed Valve V-704
    - RO Clean Mixing Valve V-703
    - RO Feed Tank Drain to Waste Valve V-412
- Threaded Ball Valve Replacement
    - MF Strainer Vent/Sample Valve V-110
    - MF Vent Valve V-114
    - MF Filtrate Drain Valve V-203
    - MF Filtrate Sample Valve V-204
    - MF Shell Drain Valve V-403
    - RO Feed Tank Auxiliary Drain Valve V-210
    - RO Feed Pump Drain Valve V-211
    - HP Pump Inlet Drain Valve V-213
    - HP Pump Case Drain Valve V-214
- Butterfly Valve Replacement
    - MF Main Feed Valve V-111
    - MF Upper Feed Inlet Valve V-112
    - MF Lower Feed Inlet Valve V-113
    - MF Upper Filtrate Valve V-201
    - MF Filtrate Flow Control Valve V-202
    - HP Pump Inlet Valve V-212
    - MF Upper Backwash Out Valve V-401
    - MF Lower Shell Out Valve V-402
- Limit Stop Replacement
- Actuator (with Mechanical Position Indicator) Replacement
    - Mounted on all butterfly valves listed above.

- Actuator (with Pneumatic Positioner) Replacement
  - Mounted on MF Filtrate Flow Control Butterfly Valve V-202
- Grooved Coupling Replacement
- Flexi Joint Expansion Joint Replacement
- Pipe Coupling Replacement
- Sanitary Clamp Replacement
- Locking Arm Replacement
- Actuator Repair
- Collapsible Fabric Tank Repair
- Antiseize Pipe Tape Installation

REPLACE

Clamped-On Hose Replacement:

Parts (TM 10-4610-309-23P):
Replacement hose
Replacement clamp
Equipment Condition:
TWPS in Standby Shutdown with or without draining down as required

Replace a hose that is clamped onto a fitting as follows (see Figure 1):

1. When replacing a clamped-on drain hose, make sure the TWPS is in Standby Shutdown without Draining Down. Refer to WP 0013, TM 10-4610-309-10.
2. For all clamped-on hoses other than a drain hose, make sure the TWPS is in Standby Shutdown with Drain-Down. Refer to WP 0013, TM 10-4610-309-10.
3. Turn the screw on the hose clamp to loosen the clamp and pull the clamp back down the hose from the fitting.
4. Pull or cut the hose off the fitting.
5. Remove the hose from the fitting at the other end in the same manner.

NOTE

When measuring the length of a hose to be replaced, remember to include any portions of the old hose that you cut off in the total length for the replacement hose.

The black product tubing must be cut to a length so that, when installed, it does not drop below the end connection on the 3-way valve.

6. Measure the hose length.
7. Cut new hose to length from bulk.
8. Obtain replacement clamps if the existing clamps are rusted, corroded, or need replacement for any other reason.
9. Slide a clamp over one end of the replacement hose.
10. Push the hose all the way onto its fitting.
11. Slide the clamp up the hose over the fitting and tighten the clamp.
12. Connect the other end of the new hose to its fitting in the same manner.

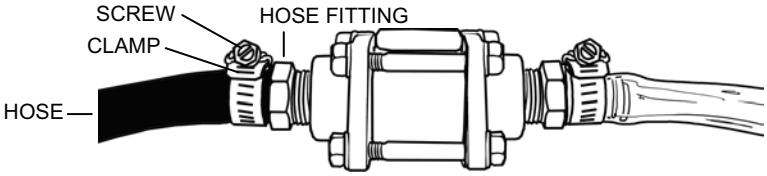

Figure 1. Replacing a Clamped-On Hose.

Compression Fitting Connected Hose Replacement:

Parts (TM 10-4610-309-23P):
Replacement hose, ferrules, and conical compression nuts
Material:
Antiseize tape (WP 0038, Table 1, item 49, 50)
Equipment Condition:
TWPS in Standby Shutdown without Draining Down
Air bled from air system

Replace a hose with a compression fitting as follows (see Figure 2):

WARNING

High pressure. Hoses that are connected with compression fittings typically operate under high pressure. Make sure that the pressure is released from the system in which the hose functions before disconnecting the hose. Failure to observe this warning can result in serious injury.

1. Make sure the TWPS is in Standby Shutdown without Draining Down. Refer to WP 0013, TM 10-4610-309-10.
2. Make sure the air has been bled from the air system. Refer to WP 0016, TM 10-4610-309-10 **ENTIRE AIR SYSTEM BLEED DOWN**.
3. Disassemble the hose and compression fitting as follows:
   a. Remove the nut, compression fitting, ferrule, and conical compression nut from the air fitting.
   b. Disconnect the other end of the hose in the same manner.
   c. Discard the hose with the compression fitting, the ferrules, and the conical compression nuts.
   d. Remove the old antiseize tape from the air fitting threads and clean the threads.
4. Assemble the new hose and compression fitting as follows:
   a. Apply new antiseize tape on the cleaned threads of the air fitting.
   b. Slide a nut over the tube on the compression fitting at one end of the replacement hose.
   c. Slide a ferrule and a conical compression nut over the tube with the tapered ends away from the compression fitting and toward the air fitting.
   d. Push the tube, nut, ferrule, and compression fitting onto the air fitting.
   e. Thread the nut onto the air fitting and tighten
   f. Assemble the other end of the new hose to its air fitting in the same manner.

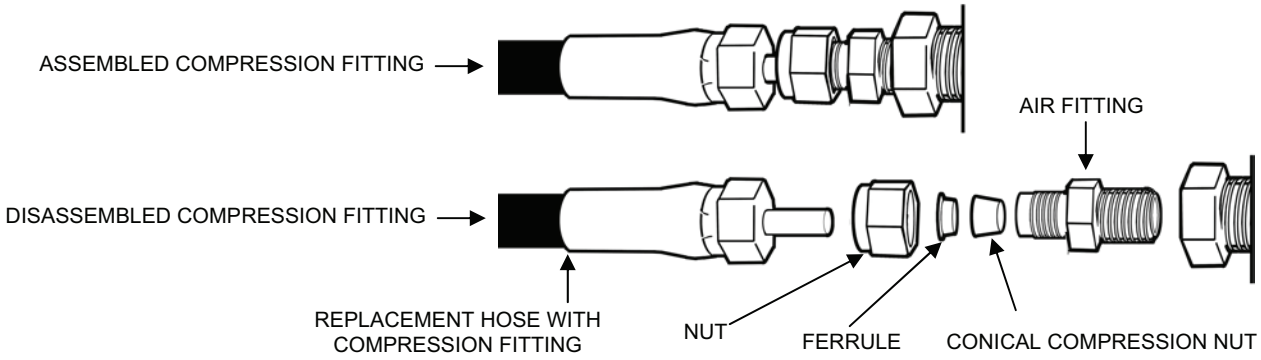

Figure 2. Replacing a Hose with a Compression Fitting.

Push-On Hose Replacement:

Parts (TM 10-4610-309-23P):
Replacement hose
Equipment Condition:
TWPS in Standby Shutdown without Draining Down
Air bled from air system

Replace a hose that is pushed onto a barbed coupling as follows (see Figure 3):

1. Make sure the TWPS is in Standby Shutdown without Draining Down. Refer to WP 0013, TM 10-4610-309-10.
2. Make sure the air has been bled from the air system. Refer to WP 0016, TM 10-4610-309-10 **ENTIRE AIR SYSTEM BLEED DOWN**.
3. Cut the hose off the fitting.
4. Remove the hose from the fitting at the other end in the same manner.

NOTE

When measuring the length of a hose to be replaced, remember to include any portions of the old hose that you cut off in the total length for the replacement hose.

5. Measure the hose length.
6. Cut new hose to length from bulk.

NOTE

Failure to lubricate the inside of the hose may result in an inability to push the hose all of the way onto the hose barb.

7. Lubricate the inside of both ends of the hose with glycerin.
8. Push one end of the hose all the way onto its barbed coupling.
9. Connect the other end of the new hose to its barbed coupling in the same manner.

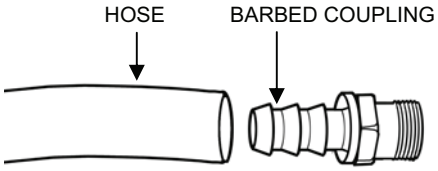

Figure 3. Replacing a Push-On Hose.

Tube Fitting-Connected Tube Replacement:

Parts (TM 10-4610-309-23P):
Replacement tubing
Equipment Condition:
TWPS in Standby Shutdown without Draining Down
Air bled from air system

Replace a ¼-in. or a $^{3}/_{8}$-in. tube that is pushed onto a tube fitting as follows (see Figure 4):

1. Make sure the TWPS is in Standby Shutdown without Draining Down. Refer to WP 0013, TM 10-4610-309-10.
2. Make sure the air has been bled from the air system. Refer to WP 0016, TM 10-4610-309-10, **ENTIRE AIR SYSTEM BLEED DOWN**.
3. Push the tube fitting collet in and pull the tube out of the fitting.
4. Remove the tube at the other end in the same manner.
5. Measure the tube and cut new tube to length.
6. Push the ends of the new tube all the way into each of the tube fittings and twist back and forth once.

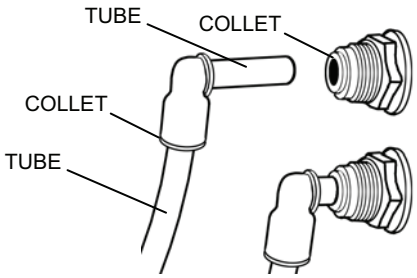

Figure 4. Disconnecting Tubing from a Tube Fitting.

Welded Ball Valve Replacement:

Parts (TM 10-4610-309-23P):
MF clean feed valve V-704
RO feed tank drain to waste valve V-412
RO clean mixing valve V-703
Materials:
Clean, dry, lint-free rags (WP 0038, Table 1, item 39)
Valve Seal Lubricant (WP 0038, Table 1, item 30)
Equipment Condition:
TWPS in Standby Shutdown with Drain-Down

Replace the any of the welded ball valves listed below as follows:
- MF System: V-704
- RO System: V-412, V-703

NOTE

1-1/4 in. and larger ball valves have piping welded to the valve.

1. Make sure the TWPS is in Standby Shutdown with Drain-Down. Refer to WP 0013, TM 10-4610-309-10.
2. Remove the welded ball valve from the pipe line as follows (see Figure 5):
   a. Make sure that the valve is in the open position with the valve handle in-line with the pipeline. This prevents the ball from protruding out of the body and scoring the body connectors when the body is removed.
   b. Remove the four nuts and bolts that hold the valve to the body connectors.
   c. Slightly pull the body connectors apart to prevent scoring of the machined faces.
   d. Slide the valve body completely away from the body connectors. Care must be taken not to damage the connector sealing faces.

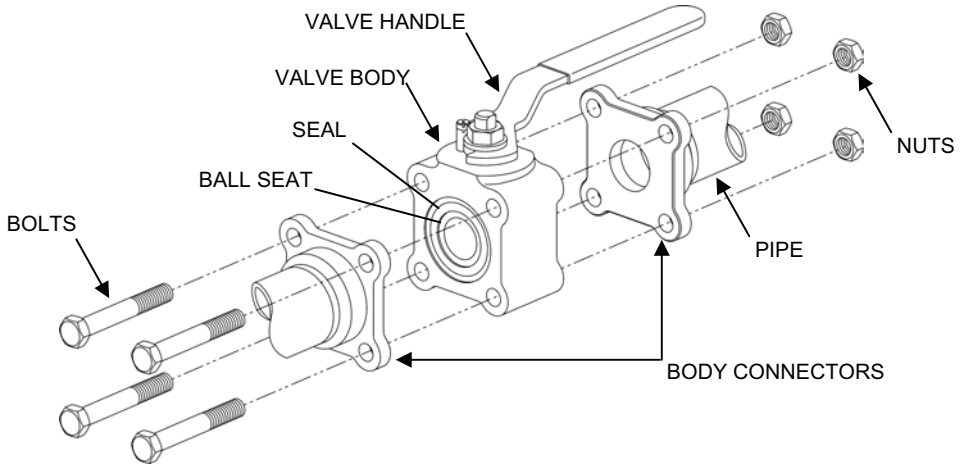

Figure 5. Welded Ball Valve Body Replacement.

3. Clean and inspect the body connector faces.

4. Install the new valve body as follows (see Figure 5):
    a. Make sure that the new valve body is in the open position with the valve handle in-line with the pipeline. This prevents the ball from protruding out of the body and scoring the body connectors when the body is being installed.

NOTE
Make sure that the lubricant used is compatible with the pipeline media.

    b. Apply a little valve seal lubricant to the seats and seals.
    c. Slightly pull the body connectors apart to get the body assembly in position and to avoid damaging the seats, seals and sealing faces.
    d. Center the body, install the bolts and nuts and tighten them diagonally and evenly.
    e. Check the valve for leaks, tightness and proper operation.

Threaded Ball Valve Replacement:

Parts (TM 10-4610-309-23P):
MF strainer drain valve V-109
MF strainer vent/sample valve V-110
MF vent valve V-114
MF filtrate drain valve V-203
MF filtrate sample valve V-204
MF shell drain valve V-403
RO feed tank auxiliary drain valve V-210
Strainer S-4 drain valve V-213
HP pump inlet drain valve V-214
HP pump case drain valve V-215
HP pump outlet drain valve V-301
RO feed pump drain valve V-211
Materials:
Clean, dry, lint-free rags (WP 0038, Table 1, item 39)
Antiseize tape (WP 0038, Table 1, item 49, 50)
Equipment Condition:
TWPS in Standby Shutdown with Drain-Down

Replace any of the threaded ball valves listed below as follows:
- MF System: V-109, V-110, V-114, V-203, V-204, V-403
- RO System: V-210
- Strainer S-4 Drain Valve V-213
- HP Pump Inlet Drain Valve V-214
- HP Pump Case Drain Valve V-215
- HP Pump Outlet Drain Valve V-301
- RO Feed Pump Drain Valve V-211

1. Make sure the TWPS is in Standby Shutdown with Drain-Down. Refer to WP 0015, TM 10-4610-309-10.
2. Remove the threaded ball valve from the pipe line as follows (see Figure 6):
    a. Make sure that the valve is in the open position with the valve handle in-line with the pipeline. This prevents the ball from protruding out of the body and scoring the body connectors if the body is removed first.

NOTE

If no union or pipe connection is found close to the valve, then remove the valve as you would a welded ball valve. Refer to REPLACE and Ball Valve, Welded.

b. Find the closest union or connection on either side of the valve and disconnect that part of the piping.
c. Unscrew and remove the disconnected end of the piping from the valve-threaded connection.
d. Unscrew the valve from the other fixed section of the pipe line.
e. Place the old valve on a clean workbench.

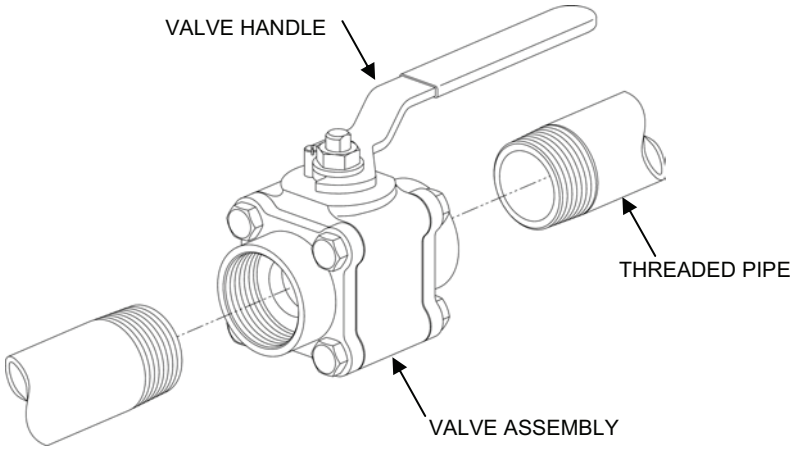

Figure 6. Threaded Ball Valve Replacement.

3. Clean the pipe threads and apply antiseize tape to the pipe threads.
4. Inspect the new valve. Remove any shipping residue and make sure that the valve is clean.
5. Install the new valve as follows:
   a. Make sure that the valve is in the open position (as shown in Figure 6).
   b. Thread the new valve onto the fixed piping so that it is in the same position as the old valve.
   c. Thread the piping that was disconnected from the old valve to the new valve and tighten.
   d. Install the union or connection that was removed to disconnect the piping and tighten.
6. Operate the system to check for leaks and proper operation.

Butterfly Valve Replacement:

Parts (TM 10-4610-309-23P):
- MF Main Feed Valve V-111
- MF Upper Feed Inlet Valve V-112
- MF Lower Feed Inlet Valve V-113
- MF Upper Filtrate Valve V-201
- MF Filtrate Flow Control Valve V-202
- HP Pump Inlet Valve V-212
- MF Upper Backwash Out Valve V-401
- MF Lower Shell Out Valve V-402

Materials:
- Clean, lint-free rags (WP 0038, Table 1, item 39)
- Sealing compound (WP 0038, Table 1, item 40)
- Five gallon bucket
- Drip Pan

Equipment Condition:
- TWPS in Standby Shutdown with Drain-Down

Replace any of the butterfly valves listed below as follows (see Figure 7):
- MF System: V-111, V-112, V-113, V-201, V-202, V-401, V-402
- High Pressure Pump Inlet Manual Valve V-212

1. Make sure the TWPS is in Standby Shutdown with Drain-Down. Refer to WP 0015, TM 10-4610-309-10.
2. Remove the butterfly valve assembly as follows:
   a. Push the actuator swivel joint adapter collet in and pull the air hose out of the adapter.
   b. Where possible place the five-gallon bucket or drip pan under the valve to be removed.
   c. Remove the four lock nuts, four bolts, and eight flat washers that secure the butterfly valve assembly to the TWPS. Separate the pipe flanges and remove the valve.

NOTE

Valve V-113 has hex nuts, lock washers, and threaded studs to secure the actuator to the valve rather than the cap screws and lock washers used for the other valves.

3. Remove the four cap screws and four lock washers that hold the actuator to the butterfly valve and remove the valve from the actuator.
4. Unthread the swivel joint adapter from the actuator.

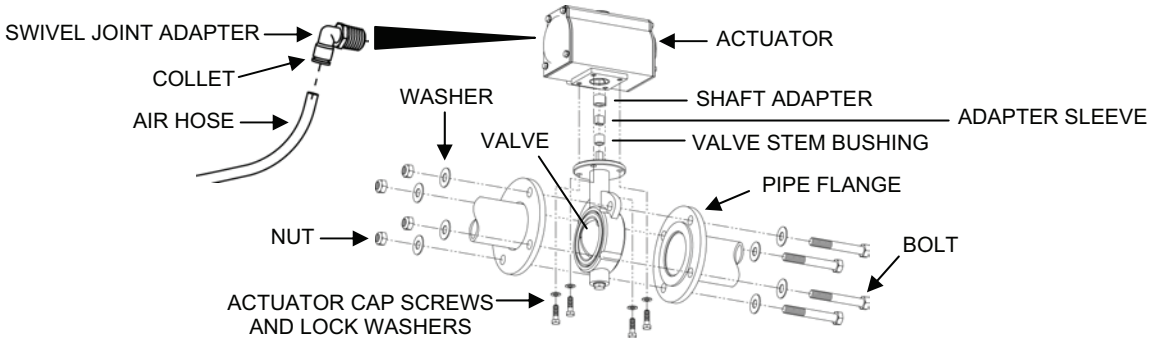

Figure 7. Butterfly Valve Replacement.

5. Install the new butterfly valve assembly onto the actuator as follows:
    a. Make sure the new valve is in the same normal position as the valve it is replacing.
        1) The valve is either normally open (NO) or normally closed (NC).
        2) A new valve can be moved to its proper starting position by securing the valve body and using a wrench on the valve stem to turn the valve.
        3) The table below lists each of the automatic valves and its normal position.

VALVE	VALVE SIZE	NORMAL POSITION
V-111 Main Feed Valve	3-in.	NO
V-112 Upper Feed Valve	2-in.	NO
V-113 Lower Feed Valve	3-in.	NC
V-201 Upper Filtrate Outlet Valve	2-in.	NO
V-202 Filtrate Flow Control Valve	2-in.	NO
V-401 Shell Backwash Upper Outlet Valve	3-in.	NC
V-402 Shell Backwash Lower Outlet Valve	2-in.	NC

    b. Clean the actuator with clean, lint-free rags and inspect for corrosion, nicks and damage.
    c. Apply sealing compound to the threads of the swivel joint adapter and thread the adapter into the actuator.
    d. For MF Lower Feed Inlet Valve V-113, see the **Limit Stop Replacement** procedures to ensure proper limit stop installation.
    e. If the shaft adapter and adapter sleeve fell out of or were removed from the actuator, insert the shaft adapter into the actuator drive bore. Set the key of the shaft adapter into the actuator bore keyway so that when the valve is assembled onto the actuator, the valve body will be aligned with the actuator as shown in Figure 7.
    f. Insert the shaft adapter sleeve into the shaft adapter.
    g. Make sure a valve stem bushing is inserted over the new valve stem and into the opening between the valve stem and valve body.
    h. Insert the valve stem into the shaft adapter / adapter sleeve.
    i. Make sure the valve body is aligned with the actuator as shown in Figure 7. If it is not, remove the valve and the shaft adapter / adapter sleeve. Reinsert the shaft adapter into the actuator bore with the adapter key fitted into the other keyway in the bore. Then insert the shaft adapter sleeve and the valve stem.
    j. Secure the actuator to the new valve with the 4 lock washers and cap screws.
6. Install the butterfly valve assembly onto the TWPS as follows:
    a. Clean the pipe flanges with clean lint-free rags and inspect for nicks and any other damage that may cause the flange to leak.

NOTE

Install the butterfly valve and actuator in the same position as the valve/actuator assembly that was removed.

    b. Separate the pipe flanges, insert the valve and secure the valve to the pipe flanges only snug tight using the four bolts, eight washers, and four nuts that were removed earlier.
    c. Make sure that the valve is centered between the flanges then tighten the nuts and bolts in a crisscross pattern.
    d. Push the air hose into the swivel joint adapter.
    e. Check the new butterfly valve for leaks and proper operation.

Limit Stop Replacement:

Parts (TM 10-4610-309-23P):
Limit Stop Assembly
Material:
Antiseizing tape (BII) (WP 0038, Table 1, item 49, 50)
Equipment Condition:
TWPS in Standby Shutdown with Drain-Down

MF Lower Feed Inlet Valve V-113 is the only butterfly valve on the TWPS that has a limit stop assembly. The limit stop replacement procedures listed here may be used to replace the limit stop assembly or for ensuring proper limit stop installation when replacing the valve or actuator for MF Lower Feed Inlet Valve V-113. Replace the limit stop as follows:

1. Back the stop screws most of the way out of the limit stop body.
2. Remove MF Lower Feed Inlet Valve V-113 from the TWPS and remove the actuator from the valve. Refer to the **Butterfly Valve Replacement** procedures.
3. If replacing an existing limit stop assembly, remove the old limit stop cam, body, and threaded studs from the bottom of the actuator.
4. Install a limit stop assembly as follows:
   a. Secure the actuator in a vise with the bottom of the actuator facing up.
   b. Make sure the valve shaft adapter is inserted into the actuator bore so that when the valve is assembled onto the actuator, the valve body will be aligned with the actuator as shown in Figure 8).

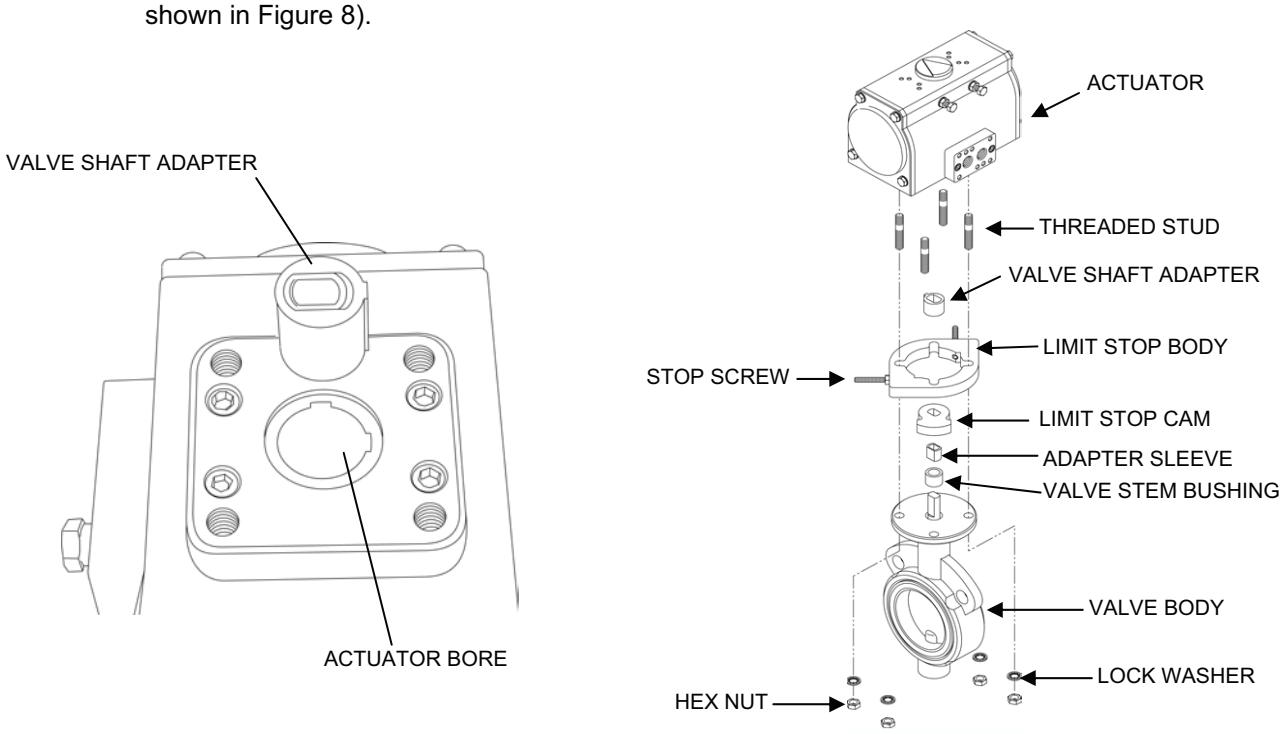

Figure 8. Valve Shaft Adapter and Adapter Sleeve Installation.

c. Apply antiseizing tape to the threads of the four new limit stop threaded studs.
d. Screw the short threaded end of the 4 threaded studs into the base of the actuator (see Figure 9).

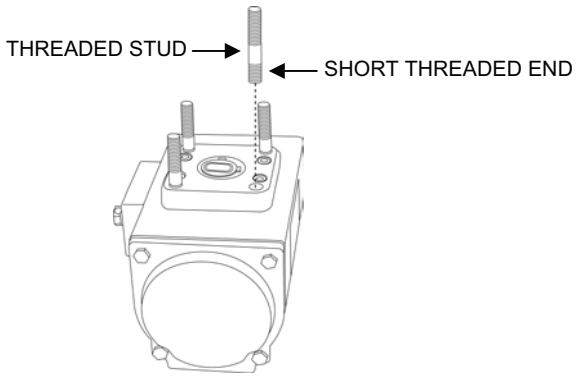

Figure 9. Limit Stop Threaded Stud Installation.

e. Place the limit stop body over the four studs and on the actuator base with the stop screws pointing away from the actuator air connection plate (see Figure 10).

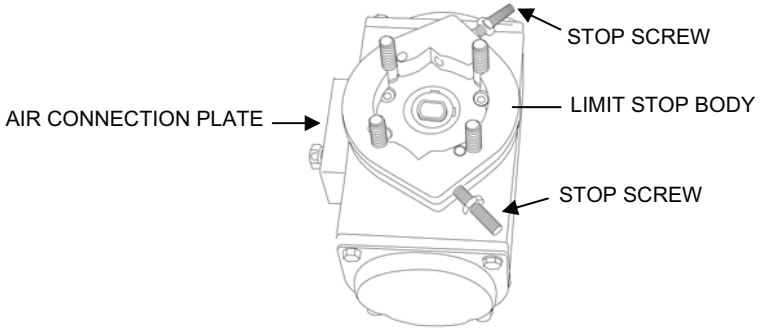

Figure 10. Limit Stop Body Installation.

f. Place the limit stop cam inside the limit stop body with the center hole aligned with the valve shaft adapter. Orient the cam as shown in Figure 11. and then slide the adapter through the limit stop cam and into the valve shaft adapter.

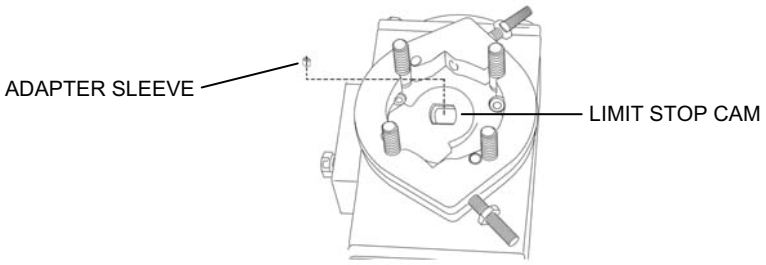

Figure 11. Limit Stop Cam Installation.

g. Set the valve over the threaded studs and onto the limit stop body with the valve oriented as shown in Figure 12.
h. Secure the valve to the limit stop body and actuator using the four star washers and four nuts that were supplied with the limit stop assembly.

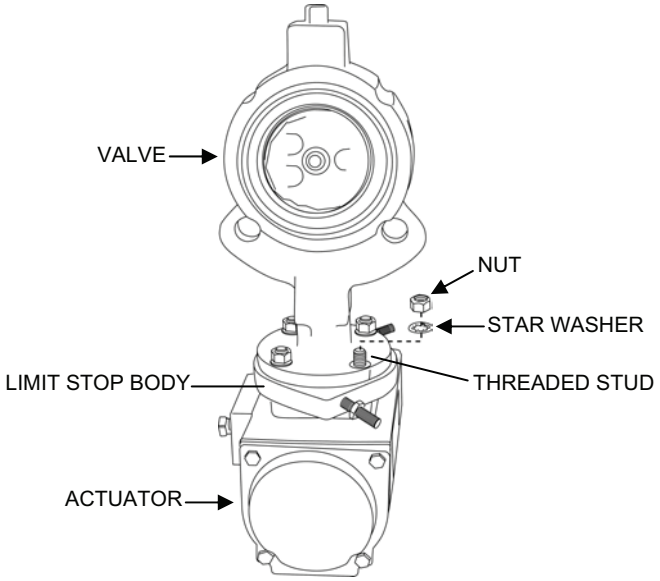

Figure 12. Valve V-113 Installation on the Limit Stop.

5. Install the butterfly valve assembly onto the TWPS. Refer to the **Butterfly Valve Replacement** procedures.
6. Set the limit stop stop-screws as follows (see Figure 13):
   a. Perform the diagnostic self-test procedures through V-113 Valve Cycle test step # 6. Refer to WP 0011, TM 10-4610-309-10.
   b. Check that the triangle-shaped position indicator on the V-113 actuator is pointing straight up, indicating that the valve is fully open.
   c. Back the jam nut on the top stop-screw to the end of the stop-screw.
   d. Screw the top stop-screw into the limit stop body so that approximately 3/8-in of stop screw is sticking out of the limit stop body.
   e. Tighten the jam nut onto the limit stop body.
   f. Unscrew the bottom stop-screw out of the limit stop body, then screw it back in about a half inch.
   g. Tighten the jam nut onto the limit stop body.
   h. Complete the diagnostic self-test procedure. Refer to WP 0011, TM 10-4610-309-10.
   i. Check that the triangle-shaped position indicator on the V-113 actuator is pointing about 45 degrees to the right of the fully open, straight up position.
   j. If the triangle-shaped position indicator is not at 45 degrees, repeat the diagnostic self-test procedure stopping at step # 6. Readjust the top stop-screw by turning in to increase the angle or turning out to decrease the angle
   k. Complete the diagnostic self-test procedure and check that the position indicator is at 45 degrees. Repeat the adjusting procedure if necessary until the position indicator is at 45 degrees at the completion of the self-test procedure.

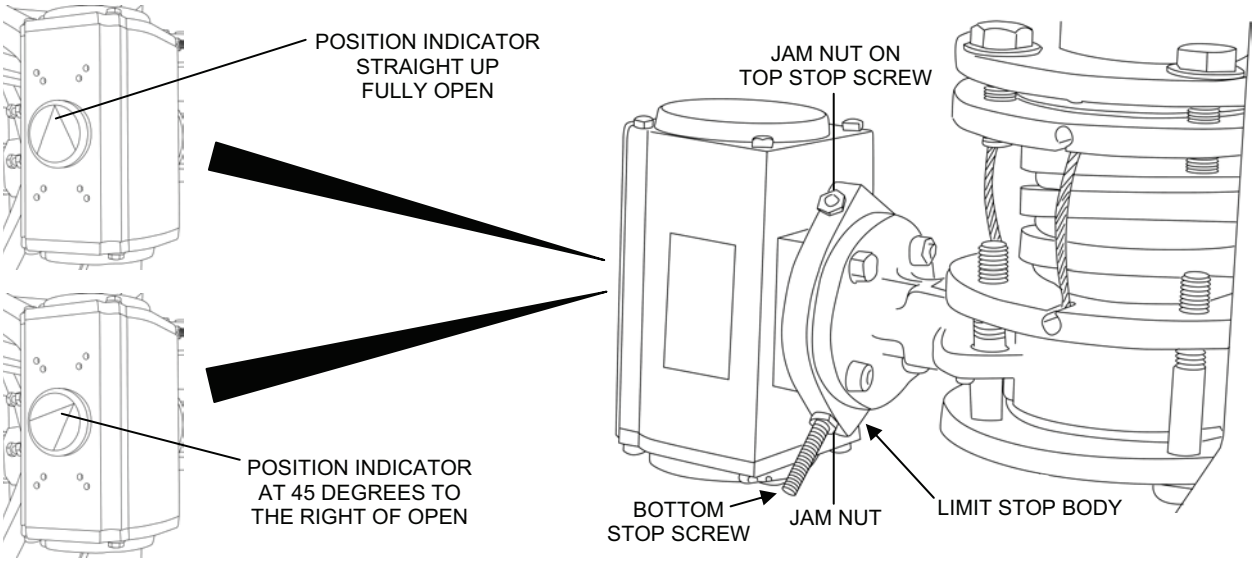

Figure 13. Limit Stop Stop-Screw Adjustment.

7. Check the butterfly valve for leaks and proper operation.

Actuator (with Mechanical Position Indicator) Replacement:

Parts (TM 10-4610-309-23P):
- Actuator P/N MRP-004U-K-S080 or MRP-004U-K-S081(on MF Lower Shell Out Valve V-402)
- Actuator P/N MRP-004U-K-S081 (on MF Upper Feed Inlet Valve V-112 and MF Upper Filtrate Valve V-201)
- Actuator P/N MRP-009U-K-S080 (on MF Lower Feed Inlet Valve V-113)
- Actuator P/N MRP-009U-K-S080 or MRP-009U-K-S081(on MF Upper Backwash Valve V-401)
- Actuator P/N MRP-009U-K-S081 (on MF Main Feed Valve V-111)

Materials:
- Clean, lint-free rags (WP 0038, Table 1, item 39)

Equipment Condition:
- TWPS in Standby Shutdown with Drain-Down

Replace any of the actuators with a mechanical position indicator as follows:

NOTE
Actuators with a mechanical position indicator comes in two sizes on the TWPS. Removal and replacement procedures are the same for both sizes.

1. Make sure the TWPS is in Standby Shutdown with Drain-Down. Refer to WP 0015, TM 10-4610-309-10.
2. Remove the butterfly valve assembly. Refer to **Butterfly Valve Replacement.**
3. Remove the actuator from the butterfly valve. Refer to **Butterfly Valve Replacement.**
4. Install the new actuator onto the valve and install the valve actuator assembly. Refer to **Butterfly Valve Replacement.**
5. Run the unit and check the actuator and valve for leaks and proper operation.

Actuator (with a Pneumatic Positioner) Replacement:

Parts (TM 10-4610-309-23P):
Actuator P/N MRP-004U-K-S081
Figure 7874, Pneumatic Positioner
Equipment Condition:
TWPS in Standby Shutdown with Drain-Down

Replace the actuator with figure 7874 pneumatic positioner that are mounted on Valve V-202 as follows:

1. Make sure the TWPS is in Standby Shutdown with Drain-Down. Refer to WP 0015, TM 10-4610-309-10.
2. Tag and disconnect the air tubes from the pneumatic position indicator and actuator.
3. Remove the butterfly valve assembly. Refer to **Butterfly Valve Replacement**.
4. Remove the actuator from the butterfly valve. Refer to **Butterfly Valve Replacement**.
5. Remove the positioner from the actuator as follows (see Figure 14):
   a. Remove the 4 screws from the cover of the pneumatic positioner and remove the cover.
   b. Remove the 4 screws and washers inside that positioner that secure the positioner to the actuator.
   c. Remove the old pneumatic positioner and the positioner shaft adapter and adapter sleeve from the actuator.

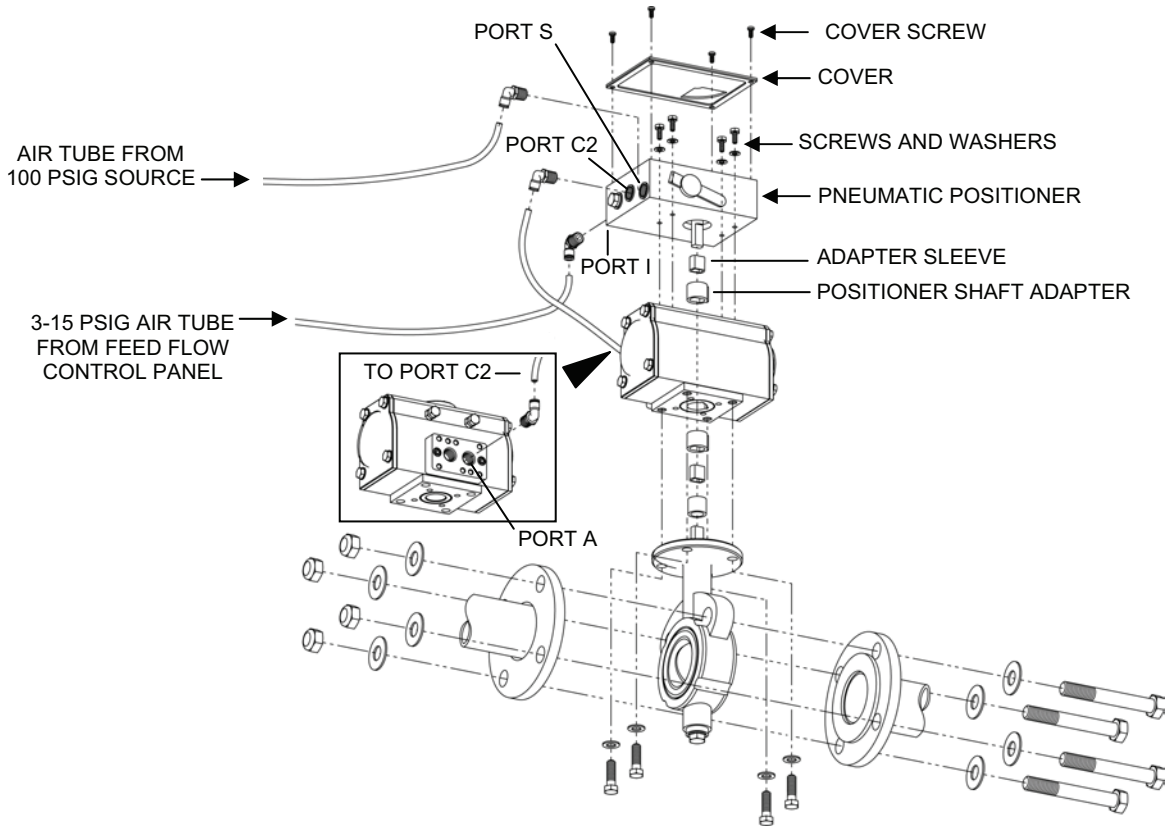

Figure 14. Pneumatic Positioner and Actuator.

6. Inspect and clean the actuator.
7. Install the new pneumatic positioner as follows:
    a. Remove the four screws on the new pneumatic positioner and open the cover.
    b. Secure the pneumatic positioner to the actuator using the 4 screws and washers.
    c. Reinstall the positioner cover using the four screws.
8. Install the actuator on the butterfly valve. Refer to **Butterfly Valve Replacement)**.
9. Install the positioner, actuator and valve assembly into the pipeline. Refer to **Butterfly Valve Replacement**.
10. Connect the air tubes to the positioner and actuator ports as marked.
11. Run the unit and check the positioner, actuator and valve for leaks and proper operation.

Grooved Coupling Replacement:

Parts (TM 10-4610-309-23P):
Grooved Coupling with Gasket System
Gasket System
Materials:
Clean, dry, lint-free rags (WP 0038, Table 1, item 39)
Glycerin (WP 0038, Table 1, item 24)
Five-gallon container or drip pan
Equipment Condition:
TWPS in Standby Shutdown with Drain-Down

Replace a grooved coupling and gasket as follows:

1. Make sure the TWPS is in Standby Shutdown with Drain-Down. Refer to WP 0015, TM 10-4610-309-10.
2. Remove the grooved coupling as follows (see Figure 15):
    a. Place a fluid container under the coupling to catch any fluid in the line.
    b. Slowly loosen the nuts and bolts that hold the coupling in place.
    c. Completely remove the nuts and bolts and then remove the flexible coupling and gasket.

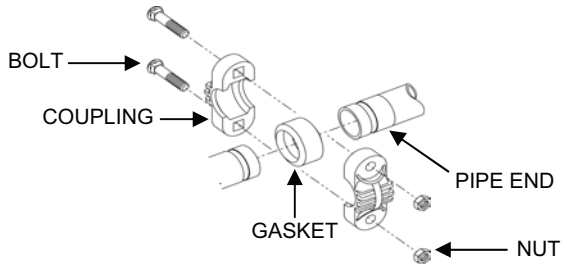

Figure 15. Grooved Coupling and Gasket.

3. Using clean, lint-free rags, clean and inspect the area where the coupling connects and check it for obvious signs of cracks and damage.
4. Install the new grooved coupling and gasket as follows:

a. Lubricate the gasket and pipe ends with glycerin. Place the new gasket around the two pipe halves.
b. Make sure that the gasket does not slide into the grooves on either of the pipe ends.
c. Install the flexible coupling over the gasket and install the bolts and nuts but do not tighten.
d. Inspect the coupling and gasket to make sure the gasket is fitted around the piping and not in the coupling grooves. Rotating the coupling back and forth will set the gasket.
e. Tighten the coupling nuts and bolts.

Flexi Joint Expansion Joint Replacement:

Parts (TM 10-4610-309-23P):
Flexi Joint Expansion Joint
Materials:
Clean, dry, lint-free rags (WP 0038, Table 1, item 39)
Equipment Condition:
TWPS in Standby Shutdown with Drain-Down

The instructions that follow describe the steps for replacing a flexi joint expansion joint (see Figure 16).

1. Make sure the TWPS is in Standby Shutdown with Drain-Down. Refer to WP 0015, TM 10-4610-309-10.
2. Remove the flexi joint expansion joint as follows:
   a. Remove the 8 bolts and 8 washers that secure the flexi joint to the piping flange.

NOTE
The flexi joint above V-113 will have only one gasket.

   b. Spread the piping apart just enough to remove the flexi joint and gaskets.

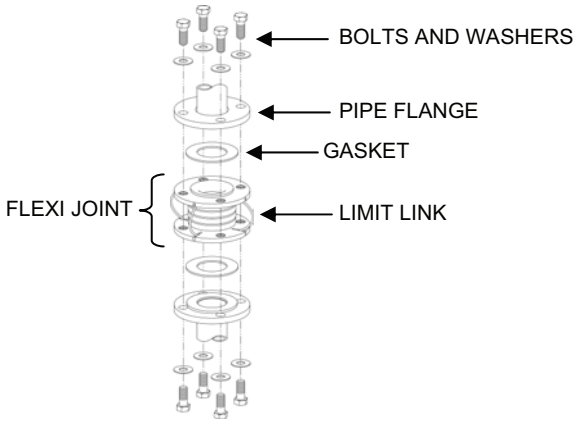

Figure 16. Flexi Joint Expansion Joint.

3. Clean the piping flanges with a clean, lint-free rag and inspect the piping and pipe flange connections for rust, corrosion and damage that would prevent the flexi joint from sealing.
4. Install the new flexi joint as follows:
   a. Ensure that the new flexi joint limit links are in place and not broken.
   b. Spread the piping apart and insert the new flexi joint and gaskets between the piping.

c. Center the gaskets.
d. Secure the piping flanges to each side of the flexi joint using the 8 bolts and 8 washers.
e. Run the unit and check the joint for leaks.

Pipe Coupling Replacement:

Parts (TM 10-4610-309-23P):
Pipe Coupling
Materials:
Clean, dry lint-free rags (WP 0038, Table 1, item 39)
Corrosion preventive compound (WP 0038, Table 1, item 19)
Equipment Condition:
TWPS in Standby Shutdown with Drain-Down

Replace a pipe coupling (see Figure 17).

1. Make sure the TWPS is in Standby Shutdown with Drain-Down. Refer to WP 0015, TM 10-4610-309-10.
2. Remove the pipe coupling as follows:
   a. Remove the nuts and bolts that secure the clamps to the pipe joint at both ends of the pipe joint. Remove the clamps and set aside.
   b. With a screw driver and hammer, tap the gasket retainers loose from the gaskets at both ends. Push the pipe joint and gasket back onto one of the pipes until it clears the end of the other pipe.
   c. Remove pipe support clamps and loosen other connections as needed to free one or both pipes to move or rotate enough to move the ends clear of each other. Remove the gaskets, gasket retainers and pipe joint from the pipes.

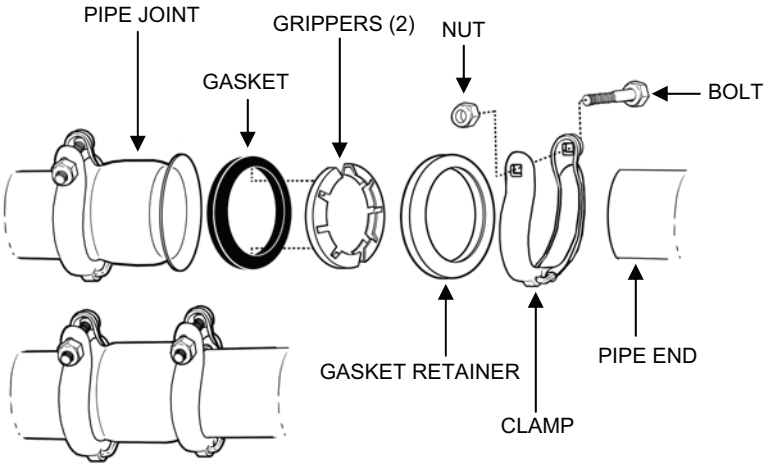

Figure 17. Pipe Coupling Replacement.

3. Clean the pipe ends with a clean, lint-free rag and inspect for rust, corrosion and damage that would prevent the pipe coupling from sealing.
4. Install a new pipe coupling as follows:
   a. Insert the two gripper sections into the inner diameter of a gasket.
   b. Insert the gasket into the gasket retainer.

c. Slide the retainer, gasket, and gripper assembly over one of the two pipe ends (retainer side first).
d. Repeat a, b, and c for the other pipe end. One side must be pushed far enough on to allow the pipe joint to clear the other pipe end.
e. Fit the pipe joint onto one pipe end. Move the pipes back into alignment.
f. Slide the assemblies at both ends up to the pipe joint so that both gaskets fit up against the flanges of the pipe joint.
g. Position the clamps over the pipe joint flanges and gasket retainers and secure loosely with a bolt and nut. When both are installed loosely, tighten the bolt and nut on both clamps.
h. Tighten the pipe connections and pipe support clamps that were loosened to move the pipes.
i. Spray the gasket retainers and clamps with the corrosion preventive compound.
j. Run the unit and check the joint for leaks.

Sanitary Clamp Replacement:

Parts (TM 10-4610-309-23P):
Sanitary Clamp
Sanitary Clamp Gasket
Materials:
Clean, dry lint-free rags (WP 0038, Table 1, item 39)
Valve Seal Lubricant (WP 0038, Table 1, item 30)
Equipment Condition:
TWPS in Standby Shutdown with Drain-Down

Replace a sanitary clamp and gasket as follows (see Figure 18):

1. Make sure the TWPS is in Standby Shutdown with Drain-Down. Refer to WP 0015, TM 10-4610-309-10.
2. Remove the sanitary clamp as follows:
   a. Unscrew the wing nut.
   b. Lift the wing nut out of the notch in the clamp.
   c. Open and remove the clamp and gasket from the pipe ends.
3. Clean the pipe end flanges with a clean, lint-free rag and inspect the piping and pipe flange connections for rust, corrosion and damage that would prevent the sanitary clamp from sealing.
4. Install the sanitary clamp as follows:
   a. Apply a little valve seal lubricant to the gasket and insert it between the two pipe ends.
   b. Open the new sanitary clamp and place it around the pipe end flanges and gasket.
   c. Flip the wing nut over and insert it in the notch in the clamp.
   d. Tighten the wing nut. Use a screwdriver in the slot to tighten. Tap with the hammer all around and tighten again.
   e. Run the unit and check the joint for leaks.

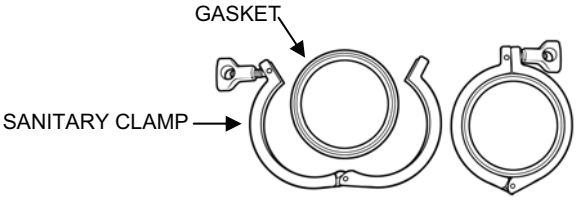

Figure 18. Sanitary Clamp and Gasket Replacement.

Locking Arm Assembly Replacement

Parts (TM 10-4610-309-23P):
Locking Arm Assembly
Equipment Condition:
TWPS in Standby Shutdown without Drain-Down

Replace the locking arm assembly on a 3-in x 10-ft raw water hoses as follows (see Figure 19):

NOTE

The shaft of the locking arm pin has ridges at one end and is smooth at the other end. To remove the pin, it must be pounded out from the smooth end. To install the pin, the smooth end of the shaft is inserted into the female hose fitting and arm and the pin is pounded in at the ridged end.

1. Place the round shaft end of a punch on the smooth end of the locking arm pin.
2. Using the punch and a hammer, pound the locking pin out of the hose fitting and the locking arm.
3. Remove the damaged locking arm.
4. Position a new locking arm in the hose fitting.
5. Insert the smooth shaft end of a new pin into the hose fitting and locking arm.
6. Place the round shaft end of the punch on the ridged end of the pin.
7. Using the punch and a hammer, pound the locking pin into the hose fitting and locking arm until the ridged end of the pin is securely wedged in the hose fitting.

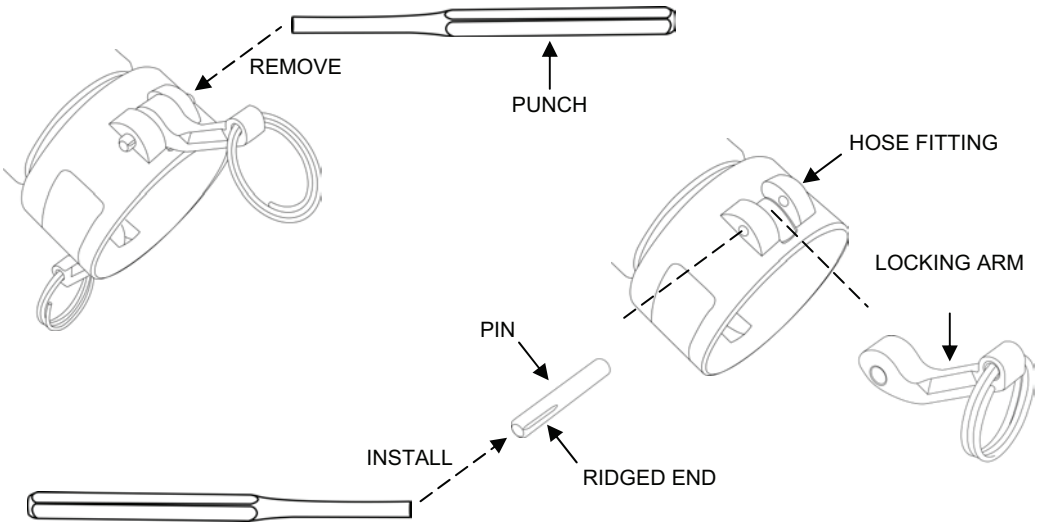

Figure 19. Locking Arm Assembly Replacement.

REPAIR

Actuator Repair:

Parts (TM 10-4610-309-23P):
Actuator Repair Kit for actuator with a 3-inch valve
Actuator Repair Kit for actuator with a 2-inch valve
Material:
Grease, Molybdenum Disulfide (WP 0038, Table 1, item 26)
Equipment Condition:
Butterfly valve assembly removed from the TWPS and actuator removed from the butterfly valve. Refer to **Butterfly Valve Replacement**.

Repair a Actuator as follows:

1. Disassemble the actuator as follows (see Figure 20):
   a. Loosen the 2 travel stop lock nuts.
   b. Remove the 2 travel stop bolts, 2 lock nuts, and 2 sealing washers.

WARNING

Spring tension. There is spring tension against both actuator end caps. When removing an end cap, each of the four end cap bolts must be loosened a little at a time until there is no spring tension on the end cap. Failure to observe this warning may result in distortion of and damage to the bolts and possible injury due to the sudden release of the springs.

   c. Remove one of the two end caps as follows:
      1) Loosen each of the four end cap bolts a little at a time until there is no spring tension on the end cap.
      2) Finish removing the four end cap bolts and four flat washers.
      3) Lift the end cap and the spring assemblies out of the actuator body.
   d. Remove the other end cap in the same manner in which the first end cap was removed.
   e. Remove the pistons as follows:
      1) Set the actuator with the base plate facing up.
      2) Insert the shaft adapter into the pinion shaft.
      3) Insert a suitable tool (such as the nose of a needle nose pliers) into the shaft adapter and turn the pinion shaft clockwise to force the pistons out of the body.
      4) Pull the pistons out of the body.
   f. Remove the four base plate cap head bolts and spring washers from the bottom of the base plate and gently pull the base plate off the actuator body.
   g. Gently pry the position indicator cap off the top of the pinion shaft (a flat head screw-driver works well.)
   h. Withdraw the pinion shaft out the bottom of the actuator.
   i. Remove the two air connection plate cap head bolts and washers from the air connection plate and lift the connection plate off the actuator body.

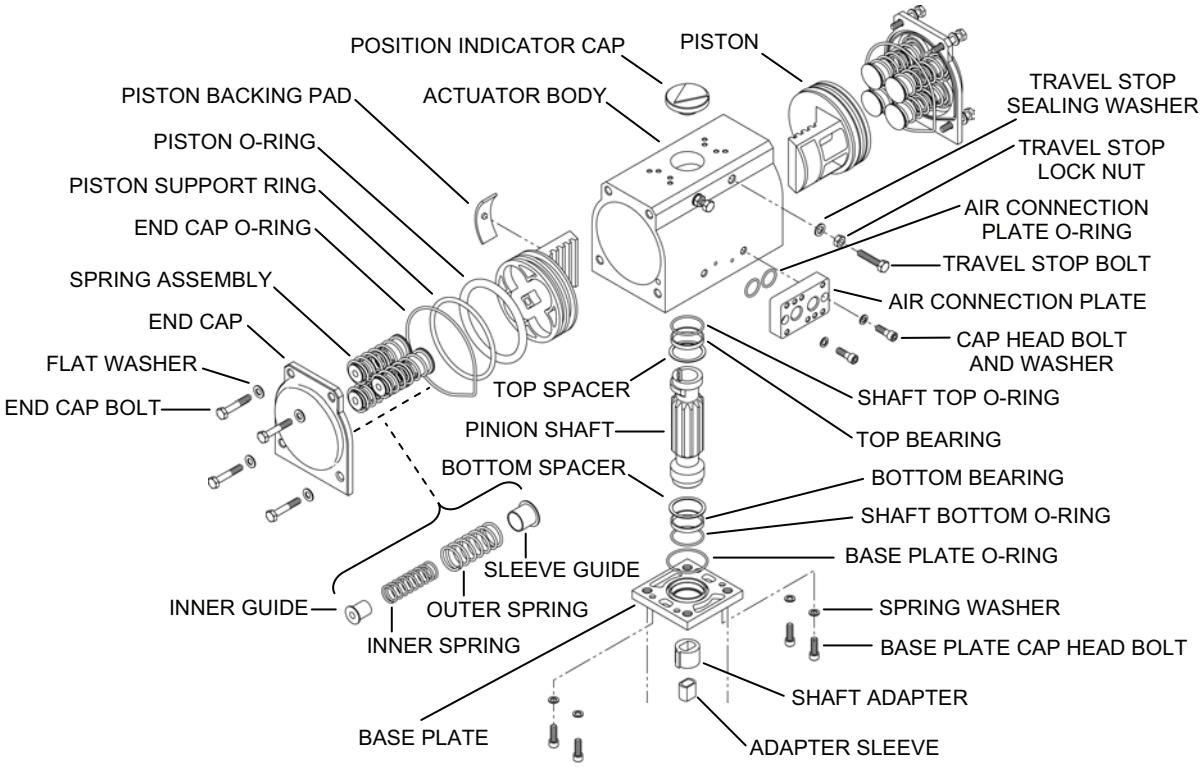

Figure 20. Actuator Disassembly.

2. Clean all the disassembled components.
3. Remove and replace the following components with new components (see Figure 20):
    a. Shaft top O-ring
    b. Top bearing
    c. Top spacer
    d. Shaft bottom O-ring
    e. Bottom bearing
    f. Bottom spacer
    g. Base plate O-ring
    h. Piston O-ring (one on both of the pistons)
    i. Piston support ring (one yellow green ring on both of the pistons)
    j. Piston backing pad (one on both of the pistons)
    k. End cap O-ring (one on both of the end caps)
    l. Air connection plate O-rings (two)
4. Reassemble the actuator as follows (see Figure 20):
    a. Lubricate the body bore (inside of the actuator body) with molybdenum disulfide grease.
    b. Lubricate all O-rings, bearings, and support rings with molybdenum disulfide grease.
    c. Assemble the pinion shaft and base plate to the actuator body as follows:
        1) Coat the bottom of the pinion shaft with molybdenum disulfide grease.
        2) Carefully insert the pinion shaft into the base plate bore, finishing with a firm push to make sure that the shaft is fully seated in the bore.
        3) Check that the shaft bottom O-ring hasn't slipped out of position so that it sticks out the bottom of the base plate. If the O-ring is out of position, remove the shaft,

replace the O-ring if damaged or reseat the O-ring on the shaft and reinsert the shaft in the base plate.

4) Carefully lower the body of the actuator over the top of the pinion shaft and onto the base plate, finishing with a firm push to make sure that the top of the shaft is fully seated in the body bore.
5) Check that the holes in the base plate line up with the holes in the bottom of the actuator body. If they do not, rotate the base plate 90º so that the holes do line up.
6) Secure the base plate to the body using the four cap head screws and spring washers.

d. Position the pinion shaft as follows:
   1) Set the actuator on its base plate with the air connection plate facing you.
   2) Insert the shaft adapter into the top of the pinion shaft.
   3) If the actuator is for use on a normally open valve (V-111, V-112, V-201, or V-202) insert a suitable tool (such as the nose of a needle nose pliers) into the shaft adapter and turn the pinion shaft so that both pinion shaft keyways are at a 45º angle to the air connection plate (see Figure 21).
   4) If the actuator is for use on a normally closed valve (V-113, V-401, or V-402) insert a suitable tool (such as the nose of a needle nose pliers) into the shaft adapter and turn the pinion shaft so that both pinion shaft keyways are at a 45º angle to the left end of the actuator body (see Figure 21).
   5) Remove the shaft adapter from the top of the pinion shaft.

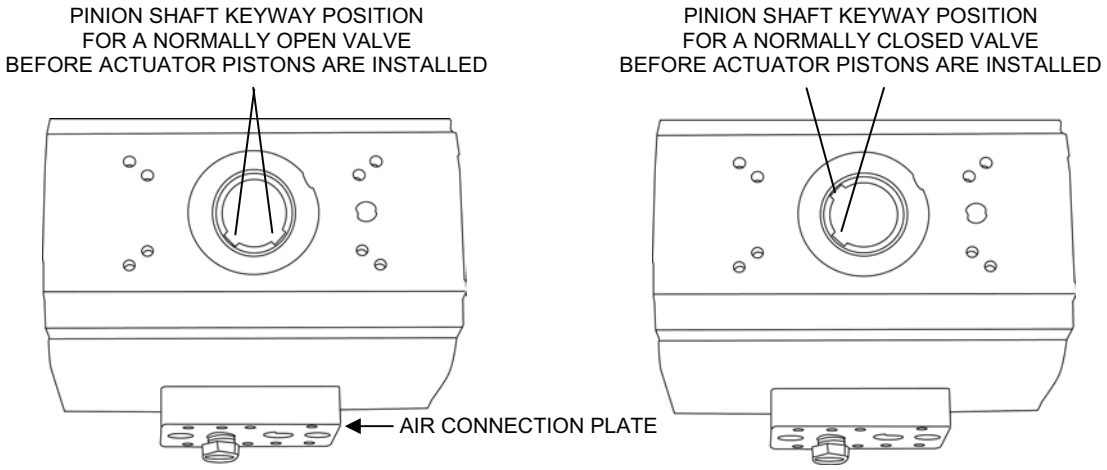

Figure 21. Position of Actuator Pinion Shaft Keyways Prior to Installing Pistons.

e. Lubricate the pinion shaft teeth with molybdenum disulfide grease.
f. Assemble the pistons to the actuator body as follows:
   1) Lubricate the piston teeth with molybdenum disulfide grease.
   2) With the air connection plate facing you, insert the right piston into the bore of the actuator body with its backing pad toward you and insert the left piston into the bore with its backing pad away from you (see Figure 20).
   3) Holding the pistons in place so that they do not fall out of the actuator body, position the actuator body so that one piston head is on the working surface and the other piston head is facing up.

4) Push firmly on the top piston to push the pistons into the actuator body until both pistons engage with the teeth on the pinion shaft.
5) Check that the piston O-ring on both of the pistons has not slipped out of position so that it sticks out between the piston head and the end of the actuator body. If an O-ring is out of position, remove the pistons, replace the O-ring if damaged or reseat the existing O-ring on the piston head, and reinsert the pistons into the bore of the actuator.

g. Reposition the pinion shaft to fully retract the pistons into the body as follows:
1) Set the actuator body on the work surface with the base plate down.
2) Insert the shaft adapter into the top of the pinion shaft.
3) Insert a suitable tool (such as the nose of a needle nose pliers) into the shaft adapter and turn the pinion shaft clockwise as far as it will go.
4) Remove the shaft adapter from the top of the pinion shaft.

h. Assemble the springs as follows (see Figure 22):
1) Insert one inner guide into one end of an inner spring.
2) Insert the other end of the inner spring into the open end of a sleeve guide.
3) Insert the inner guide end of the inner spring into one end of an outer spring.
4) Repeat for each of the other seven spring assemblies.

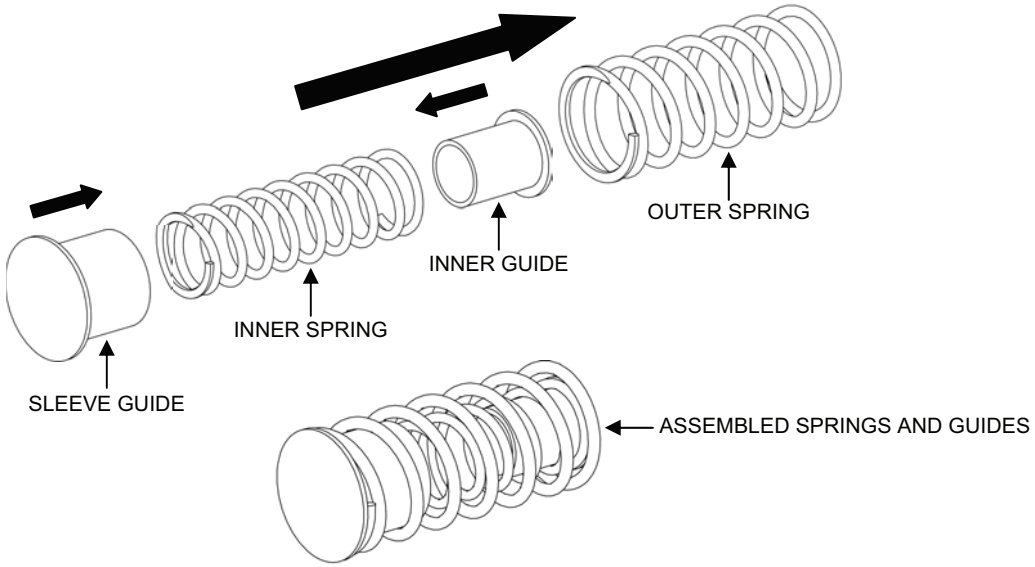

Figure 22. Actuator Spring Assembly.

i. Assemble the springs and end caps to the actuator body as follows (see Figure 23):
1) Set the actuator body up on one end of the body.
2) Set four assembled spring assemblies, sleeve guide down, into the cavity of the piston head.
3) Carefully align and set an end cap onto the spring assemblies so that the cone shaped projections of the end cap fit into the ends of the inner guides
4) Insert four end cap bolts with four flat washers through the holes in the end cap.
5) Push down on the end cap, compressing the springs enough to start threading the bolts into the actuator body.

6) Tighten each bolt a little at a time until the end cap is fully tightened down onto the actuator body.
7) Torque the bolts as follows:
   a) 51.5 in.-lbs. for the 4-inch (smaller) actuators
   b) 117.5 in.-lbs. for the 9-inch (larger) actuators
8) Repeat the previous 7 steps for the other end cap.

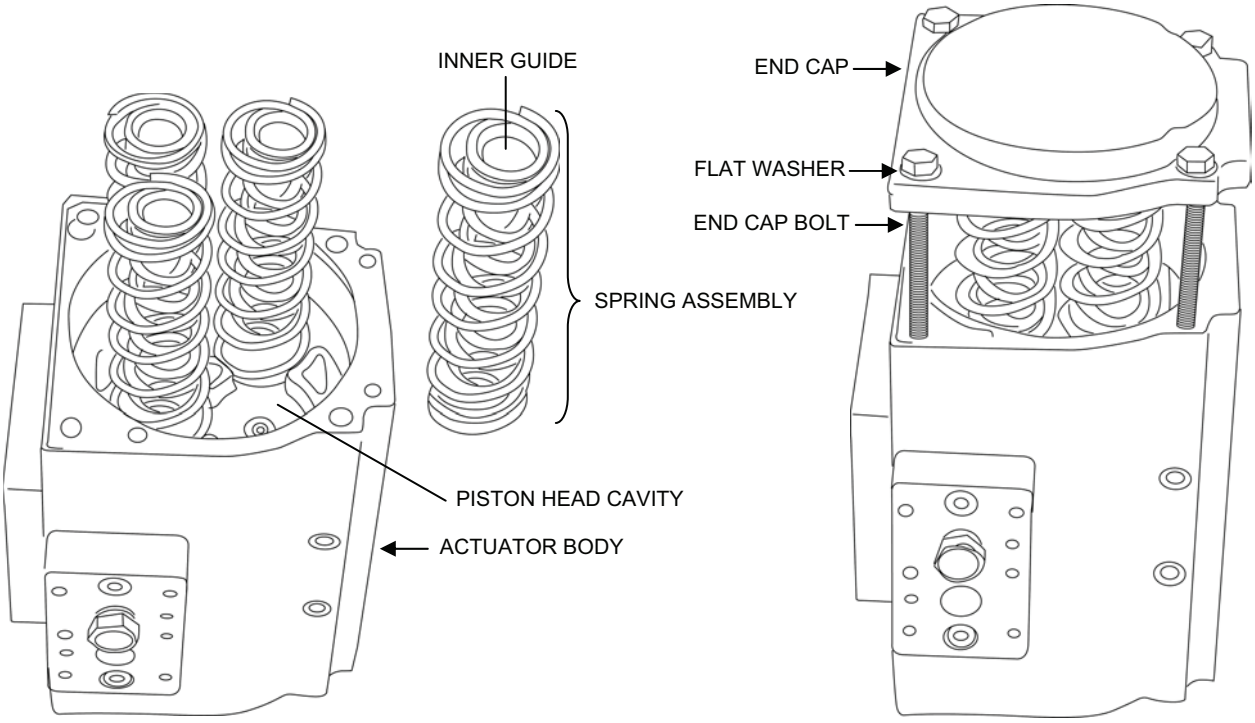

Figure 23. End Cap Assembly.

j. Align the position indicator keys with the keyways on top of the pinion shaft and push the position indictor fully onto the shaft.
k. Make sure the air connection plate O-rings are in place.
l. Position the plate on the actuator body with the silencer to the left and secure the plate using the two cap head bolts and washers (see Figure 23).

CAUTION

Do NOT use the travel stop screws to move or reposition the actuator pinion shaft. Failure to observe this caution will result in damage to cams on the pinion shaft or to the ends of the stop screws.

m. Set the actuator travel stops as follows (see Figure 24):
   1) Thread a lock nut onto both of the two travel stop screws.
   2) Fit a sealing washer onto both of the two travel stop screws.
   3) With the actuator setting on its baseplate and the air connection plate facing you, screw in the left travel stop screw to an estimated position.
   4) Apply 100-120 psig air to port “A” to fully operate the actuator.
   5) Check the position indicator. With the air connection plate facing you, release air pressure as necessary until the position indicator is pointing as follows:
      a) To the left end of the actuator with a normally closed valve.
      b) To the air connection plate with a normally open valve.
   6) Reset the travel stop screw then tighten the lock nut to secure the stop screw.
   7) Screw in the right travel stop screw to an estimated position.
   8) Apply 100-120 psig air to port “A” again to fully operate the actuator.
   9) With the air connection plate facing you, release air pressure as necessary until the position indicator is pointing as follows:
      a) To the left end of the actuator with a normally closed valve.
      b) To the air connection plate with a normally open valve.
   10) Reset the travel stop screw then tighten the lock nut to secure the stop screw.

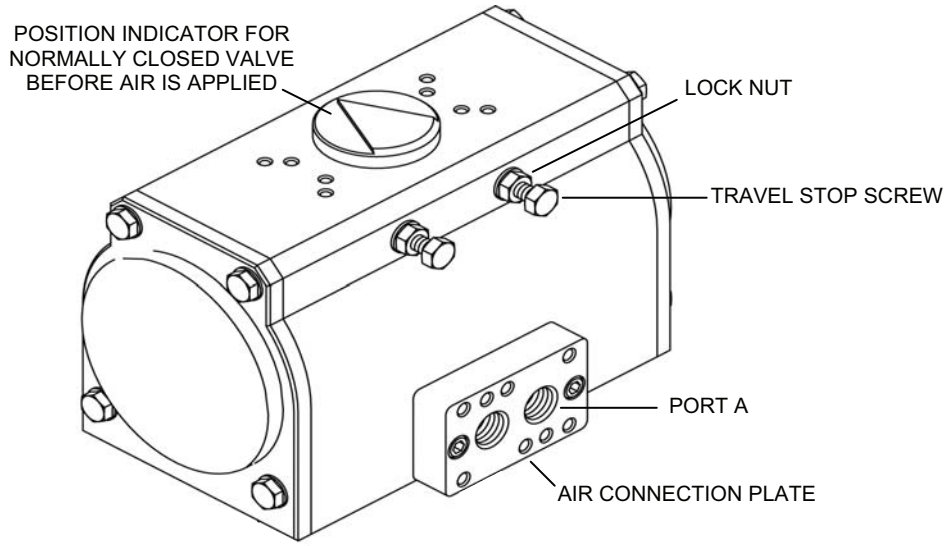

Figure 24. Actuator Travel Stops.

5. Secure the actuator to the butterfly valve. Refer to **Butterfly Valve Replacement**.
6. Secure the butterfly valve assembly to the TWPS. Refer to **Butterfly Valve Replacement**

Collapsible Fabric Tank Repair:

Materials:
Repair Kit, Collapsible Fabric Tank (COEI)

Refer to TM 10-5430-237-12&P (Marine Corps TM 01034E-12&P/1) for repair procedures for the collapsible product water distribution tank.

Repair the MF Feed Tank or the Cleaning Waste Storage Tank as follows:

1. Open up the collapsible fabric tank repair kit that was packed with the tank (see Figure 25).

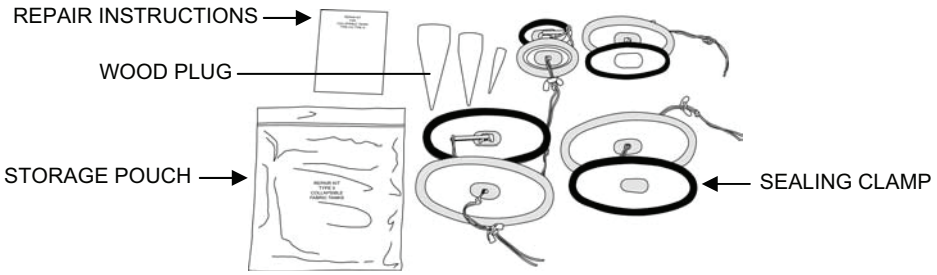

Figure 25. Collapsible Fabric Tank Repair Kit.

2. Follow the repair instructions contained in the repair kit (see Figure 26).

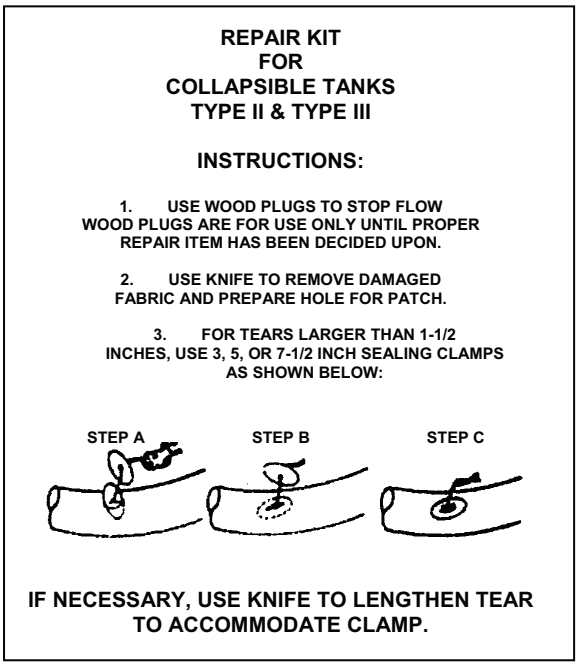

Figure 26. Collapsible Fabric Tank Repair Instructions.

ASSEMBLY

Antiseize Pipe Tape Installation:

Materials:
Antiseize pipe tape (BII) (WP 0038, Table 1, item 49, 50)

Install pipe tape on piping with external pipe thread as follows (see Figure 27):

1. Select the correct pipe tape using the chart below.

FOR THIS PIPE SIZE	USE THIS PIPE TAPE
$^1/_4$" – $^3/_8$"	¼: tape
½" or larger	½" tape

NOTE

When threading piping together to which teflon tape has been applied, check the final position of the component before tightening. Over-tightening then backing off taped components can break the seal provided by the tape and result in leaks.

2. Wrap the external pipe threads with pipe tape as follows:
   a. Start wrapping the threads one and a half threads back from the end of the pipe.
   b. Completely wrap the pipe tape around the pipe snug tight in a clockwise direction facing the end of the pipe.
   c. Continue a second complete turn around the pipe, but this time stretch the tape tight without breaking it.
   d. Continue with a third complete turn in the same manner.
   e. After completing the third turn, break off the tape and smooth the end against the threads.

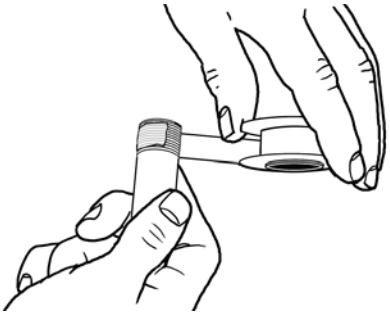

Figure 27. Installing Pipe Tape on External Pipe Threads.

END OF WORK PACKAGE

TACTICAL WATER PURIFICATION SYSTEM (TWPS) FIELD MAINTENANCE PROCEDURES WIRING DIAGRAMS

0028 00

GENERAL

This work package contains wiring diagrams for all electrical systems and circuits in the Tactical Water Purification System (TWPS). The diagrams are on foldout sheets located at the end of this manual.

WIRE IDENTIFICATION

Wires are identified by number or letter and number designation.

ABBREVIATIONS

All abbreviations are in accordance with ASME-Y14.38M, except where the abbreviation stands for a marking actually found in the TWPS.

WIRING DIAGRAMS

Foldout pages 1 through 16 are reproductions of schematic diagrams for the TWPS.

Foldout pages 17 through 48 are point-to-point wiring diagrams for the TWPS.

END OF WORK PACKAGE

TACTICAL WATER PURIFICATION SYSTEM (TWPS) FIELD MAINTENANCE PROCEDURES DIESEL ENGINE

0029 00

THIS SECTION COVERS
Inspect, Service, Replace

INITIAL SETUP

Maintenance Level
Field
Tools
Valve Spring Compressor
Soft Brass Brush
Outside Micrometer
Depth Micrometer or Depth Gauge
Torque Wrench (minimum 0-250 in.-lbs)
Reference:
Refer to TM 10-4610-309-23P for repair parts information
Personnel Required
One
Equipment Condition
Diesel engine out of service.

GENERAL

This work package contains information and instructions for performing maintenance on the P-1 or P-8 Pump Assembly diesel engine. The procedures covered in this work package include:

- Cylinder Head Maintenance
  - Cylinder Head Removal
  - Intake and Exhaust Valve Removal
  - Cleaning, Inspection, and Replacement
  - Reassembly
- Piston Ring Replacement

CYLINDER HEAD MAINTENANCE

Parts (TM 10-4610-309-23P):
- Cylinder head
- Cylinder head gasket
- Cylinder head O-ring
- Cylinder head cover gasket
- Intake valve
- Exhaust valve
- Valve stem seal (2)

Material:
- Glycerin (WP 0038, Table 1, item 24)

Cylinder Head Removal (see Figure 1):

1. Remove the engine and pump assembly from the pump skid frame (WP 0011)
2. Remove the following components from the engine/pump assembly (WP 0011):
   a. Fuel tank assembly
   b. Air cleaner assembly
   c. Air heaters
   d. Muffler assembly
   e. Fuel injection valve
3. Remove the rubber detent plunger from the oil port on the cylinder head cover.
4. Remove the three cylinder head cover bolts and lift the cover off the cylinder head. Remove and discard the cover gasket.
5. Remove the rocker arm assembly bolt and lift the rocker arm assembly off the cylinder head.
6. Remove the two valve caps.

NOTE

Tag or mark each push rod to indicate its location in the head. The push rods must be reinstalled in the same locations from which they were removed.

7. Pull the two push rods out of the cylinder head.
8. Remove the four cylinder head nuts and flat washers.

CAUTION

When setting the cylinder head down, place it with the combustion surface facing up. Failure to observe this caution may result in damage to the valves and combustion surface of the cylinder head.

9. Lift the cylinder head off the engine.
10. Remove and discard the cylinder head O-ring.
11. Remove the cylinder head gasket and set aside.

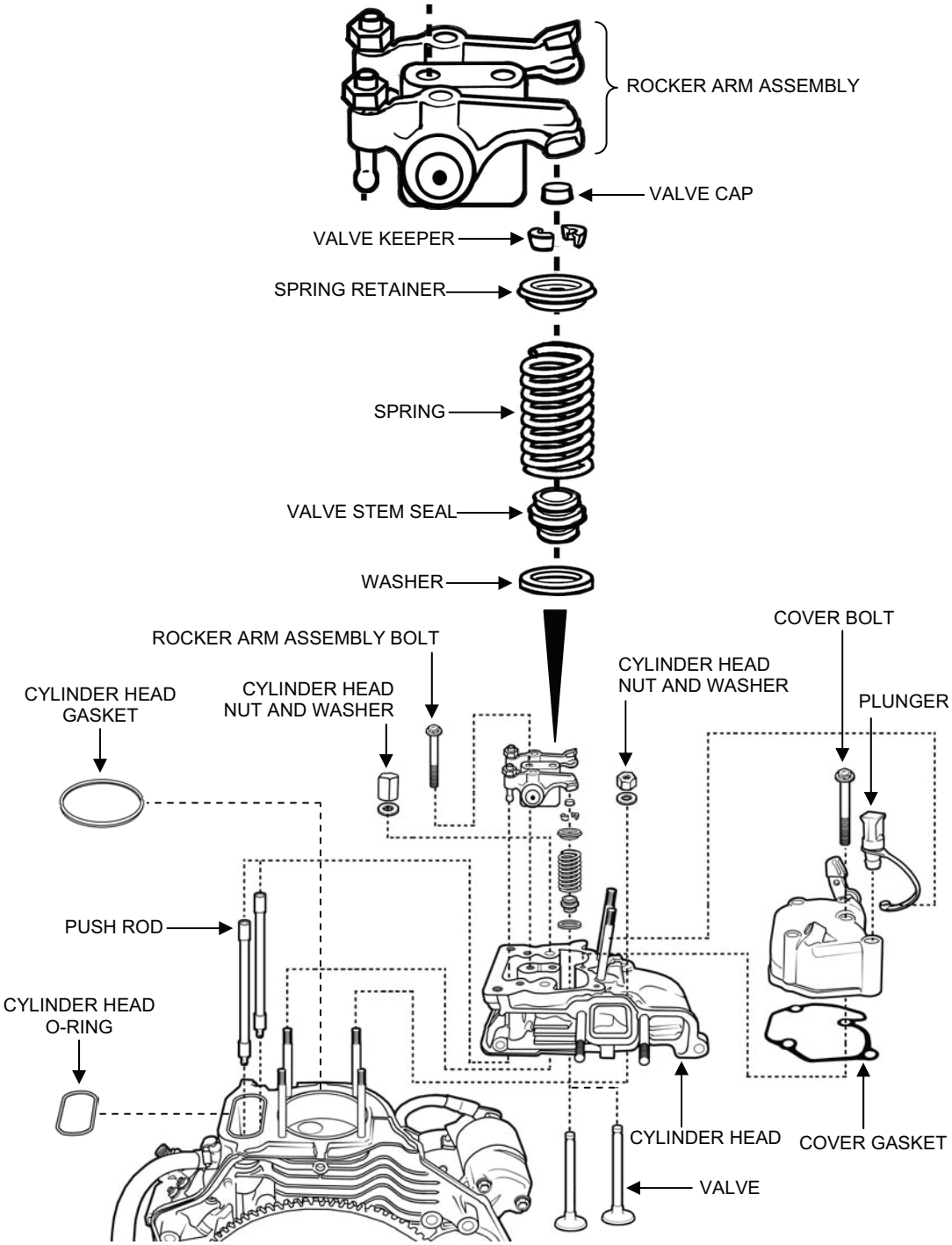

Figure 1. Cylinder Head Removal.

Intake and Exhaust Valve Removal:

CAUTION

When a valve spring is compressed, the valve may drop out of the cylinder head. Do not allow the valves to drop onto a hard surface. Failure to observe this caution may result in damage to the valves.

1. Compress the intake valve spring (see Figure 2).
2. Remove the following components: valve keeper, spring retainer, spring, valve stem seal, washer, and intake valve (see Figure 1). Discard the valve stem seal.
3. Tag the intake valve and the other components so they can be reinstalled in the same location.
4. Repeat the above steps to remove the exhaust valve.

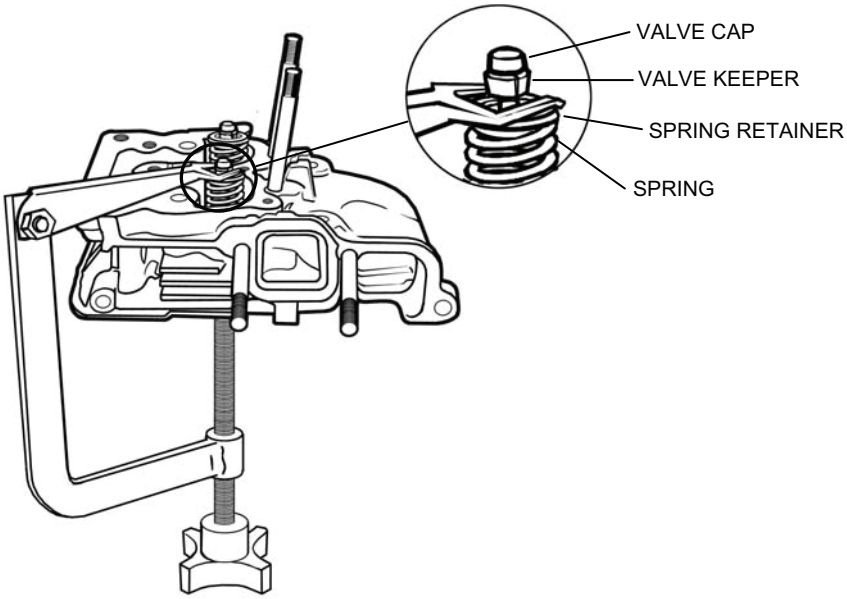

Figure 2. Compressing the Valve Spring

Cleaning, Inspection, and Replacement:

1. Using a soft brass brush, clean carbon off the valves, valve seats, and cylinder head combustion surface. Take care not to scratch or damage any of the surfaces.
2. Inspect the valves, valve seats, and valve head combustion surface for cracks or other damage.
3. Inspect the valve stems and seating surfaces for distortion or damage. If either valve is distorted or damaged, replace it.
4. Replace the cylinder head if it is cracked or if the valve seats or valve head combustion surface are damaged.
5. Check the outside diameter (O.D.) of both valve stems with a micrometer (see Figure 3). Replace a valve if its O.D. is 0.213 in. or less.

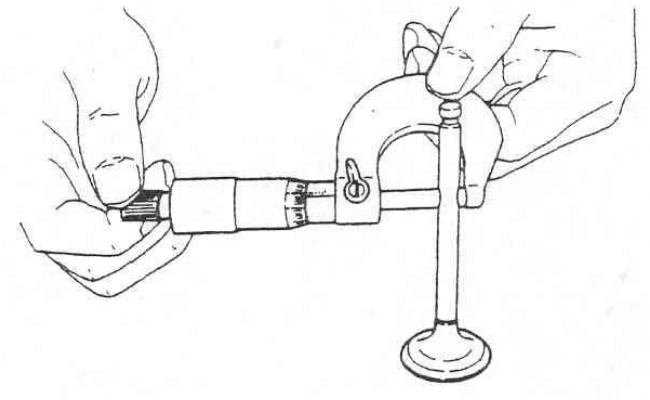

Figure 3. Checking Valve Stem O.D.

6. Check the valve sinkage using a depth micrometer (see Figure 4). Replace a valve if its sinkage is 0.047 in. or greater.

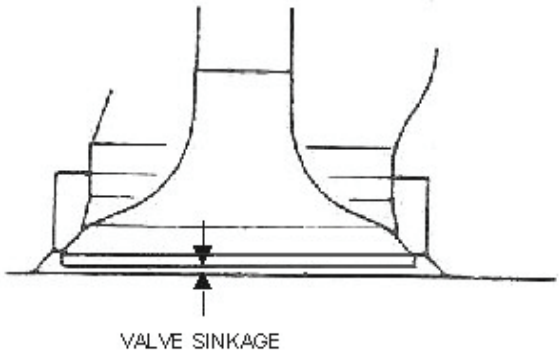

Figure 4. Valve Sinkage Measurement.

Reassembly (see Figure 5):

CAUTION

Do not mix up the intake and exhaust valves or other components – be sure to install them in the same location from which they were removed.

1. Apply a few drops of glycerin to the intake valve stem.
2. Insert the valve stem into the cylinder head.
3. Install the following components over the valve stem: washer, new valve stem seal, spring, and spring retainer.
4. Compress the intake valve spring.
5. Install the valve keeper onto the end of the valve stem and release the spring.
6. Repeat the above steps to reinstall the exhaust valve.
7. Install a new cylinder head O-ring onto the engine block.
8. Note the thickness identification mark on the old cylinder head gasket and select a replacement gasket with the same thickness identification mark. Discard the old gasket.
9. If the mark on the old gasket is not legible, determine the proper replacement gasket as follows:
    a. Measure on two sides of the piston how much the piston protrudes above the cylinder block or how much it is recessed into the cylinder block.
    b. Average the two measurements (h).
    c. Calculate the required gasket thickness (t) using the formula $0.546 - h < t < 0.596 - h$
    d. Select the replacement gasket based on the calculation.
    e. Discard the old gasket.
10. Install the new cylinder head gasket onto the engine block.
11. Place the cylinder head on the engine and secure it with four washers and nuts. Torque all four nuts to 130 in.-lbs. Then torque all four nuts again to 260-295 in.-lbs.
12. Place the push rods into the cylinder head.

NOTE

Make sure the ends of the push rods sit in the concave ends of the tappets that are inside the engine.

13. Place the valve caps onto the ends of the valve stems.
14. Place the rocker arm assembly onto the cylinder head and secure with the bolt. Torque the bolt to 170-200 in.-lbs.
15. Check/adjust the intake and exhaust valve clearance. Refer to WP 0011.
16. Install the cylinder head cover using a new gasket and three bolts.
17. Insert the rubber detent plunger into the oil port on the cylinder head cover.
18. Reinstall the following components (refer to WP 0011):
    - Fuel injection valve – torque to 95-113 in.-lbs.
    - Fuel return line
    - Air heaters
    - Air cleaner assembly
    - Muffler assembly
    - Fuel tank assembly

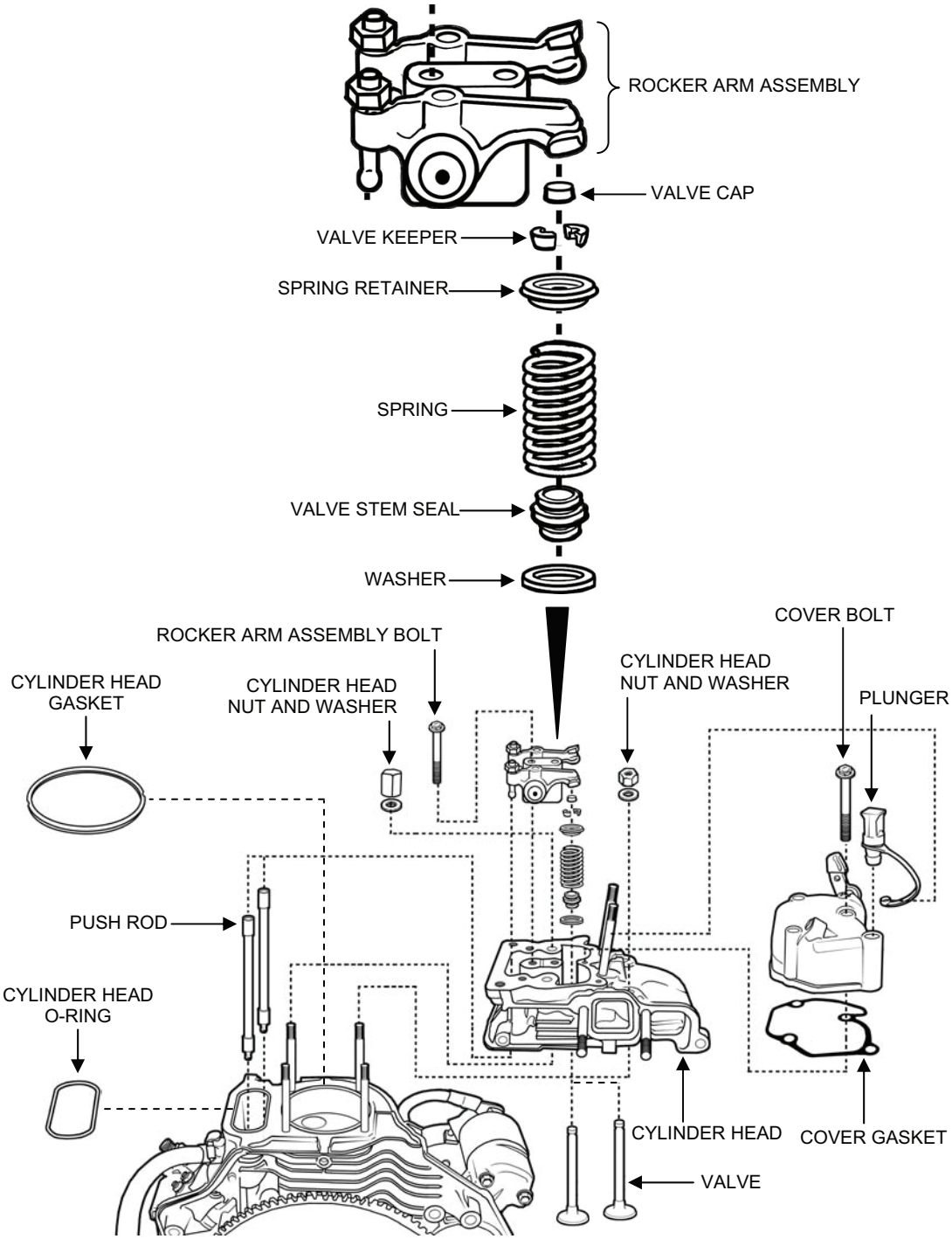

Figure 5. Cylinder Head Installation.

PISTON RING REPLACEMENT

Parts (TM 10-4610-309-23P):
- Crankcase gasket
- Piston ring set

Material:
- Lubricating Oil (WP 0038, Table 1, item 31)

Disassemble the diesel engine as follows:

1. Remove the engine and pump assembly from the pump skid frame (WP 0011).
2. Remove the pump and adapter from the engine (WP 0011)
3. Remove the following components from the engine (WP 0011):
   a. Cooling fan case assembly
   b. Muffler assembly
   c. Fuel injection valve
   d. Fuel pump assembly
4. Remove the drain plug and drain the oil from the crankcase.
5. Remove the cylinder head from the engine as described earlier in this work package.
6. Remove the 15 cap screws identified in Figure 6 from the engine crankcase cover. (The cap screws do not need to be removed in any particular order.)
7. Remove the crankcase cover and gasket from the engine.

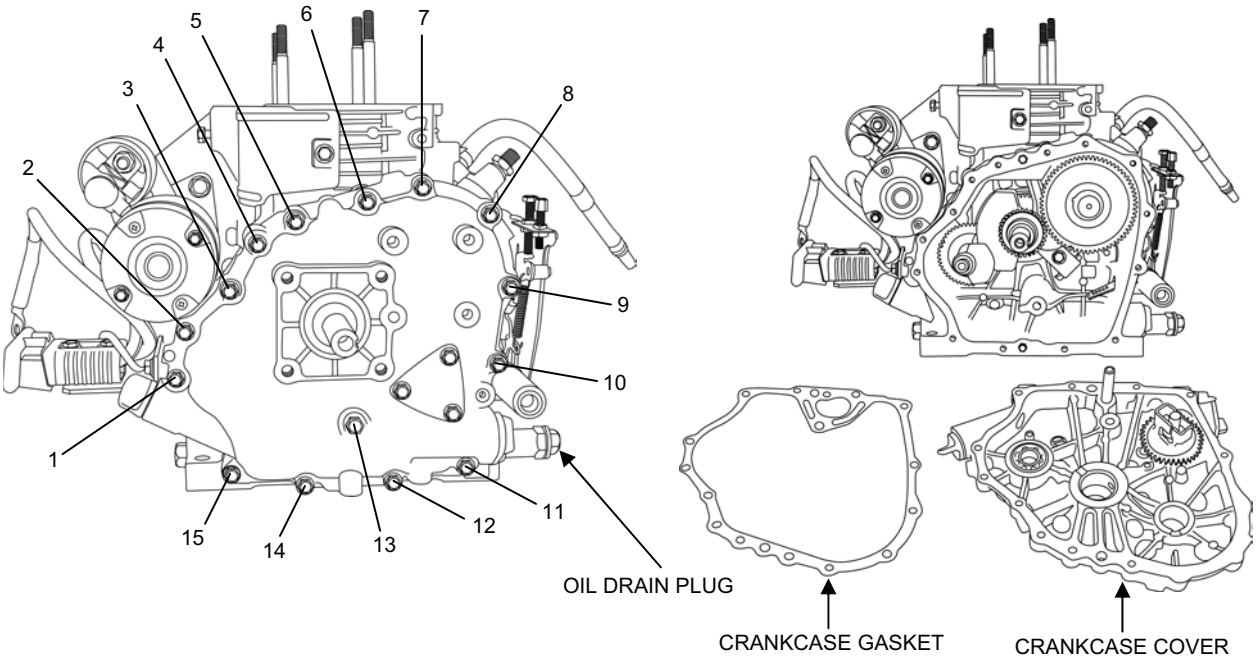

Figure 6. Crankcase Cover Cap Screw Removal.

8. Remove the following components from inside the engine in order (see Figure 7):

NOTE

The valve tappets are located behind the camshaft. If the valve tappets drop down, they may prevent the removal of the camshaft. If this happens, it will be necessary to push the tappets up into their sleeves while pulling the camshaft out.

a. Pull out the camshaft.
b. Remove the valve tappets.
c. If the fuel oil tappet slides out of its sleeve, remove the spring seat.

NOTE

If the cams on the crankshaft and the balancer shaft are overlapped, as shown in Figure 7, it will be necessary to turn the crankshaft until the cams are no longer overlapped before the balancer shaft can be removed.

d. Pull out the balancer shaft.

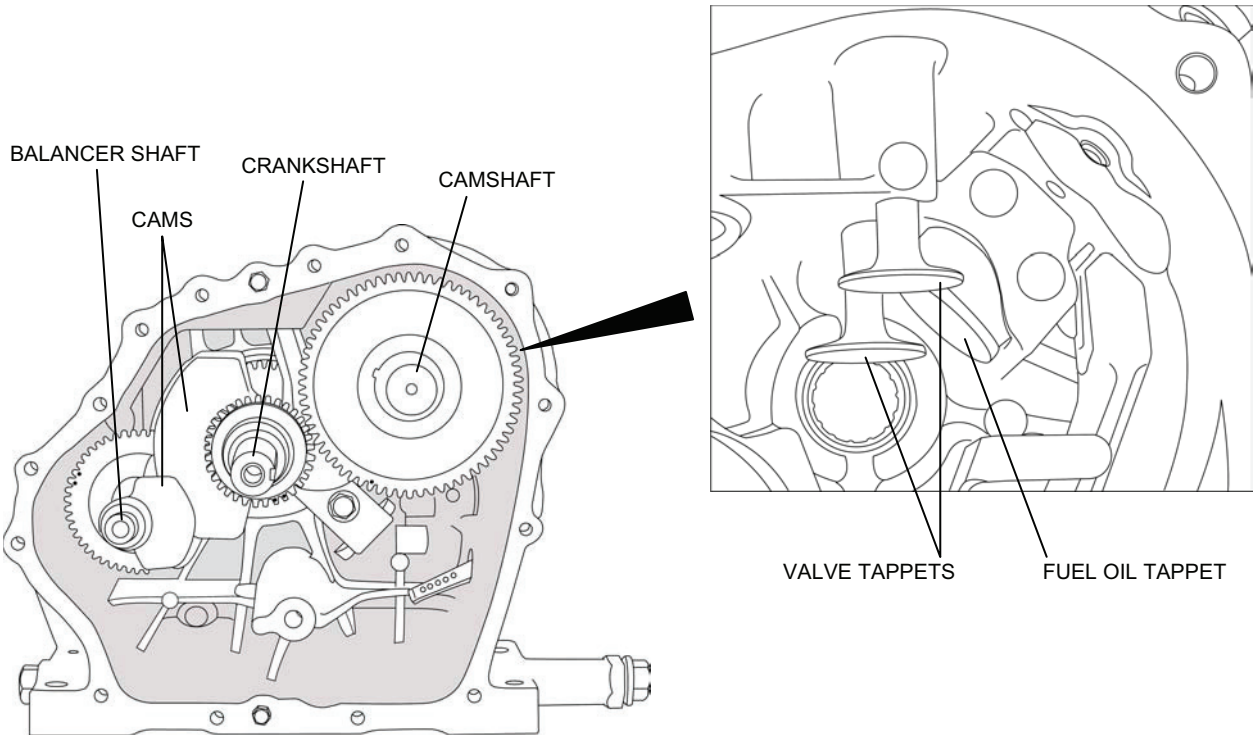

Figure 7. Camshaft, Valve and Fuel Oil Tappets, and Balancer Shaft Removal.

9. Remove the piston and connecting rod assembly from the engine as follows (see Figure 8):

NOTE
If the crankshaft is at the top of the stroke, the connecting rod tightening bolts will be difficult to access. Rotate the crankshaft to the bottom of the stroke so that the tightening bolts are accessible, as shown in Figure 8.

a. Remove the connecting rod tightening bolts.
b. Remove the connecting rod end cap.
c. Rotate the crankshaft to the top of the stroke and pull the piston out the top of the engine block.

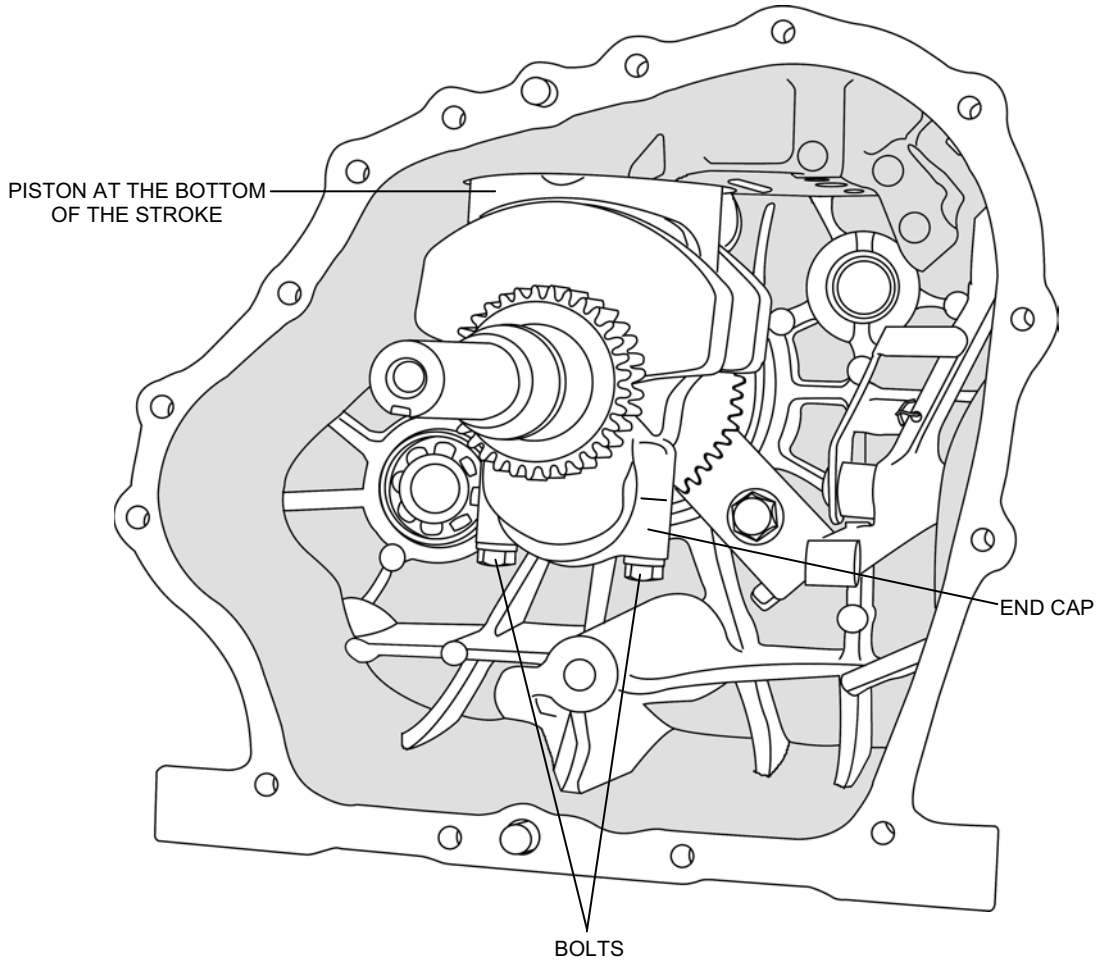

Figure 8. Piston and Connecting Rod Assembly Removal.

10. Using a ring spreader, remove the three piston rings from the piston (see Figure 9).

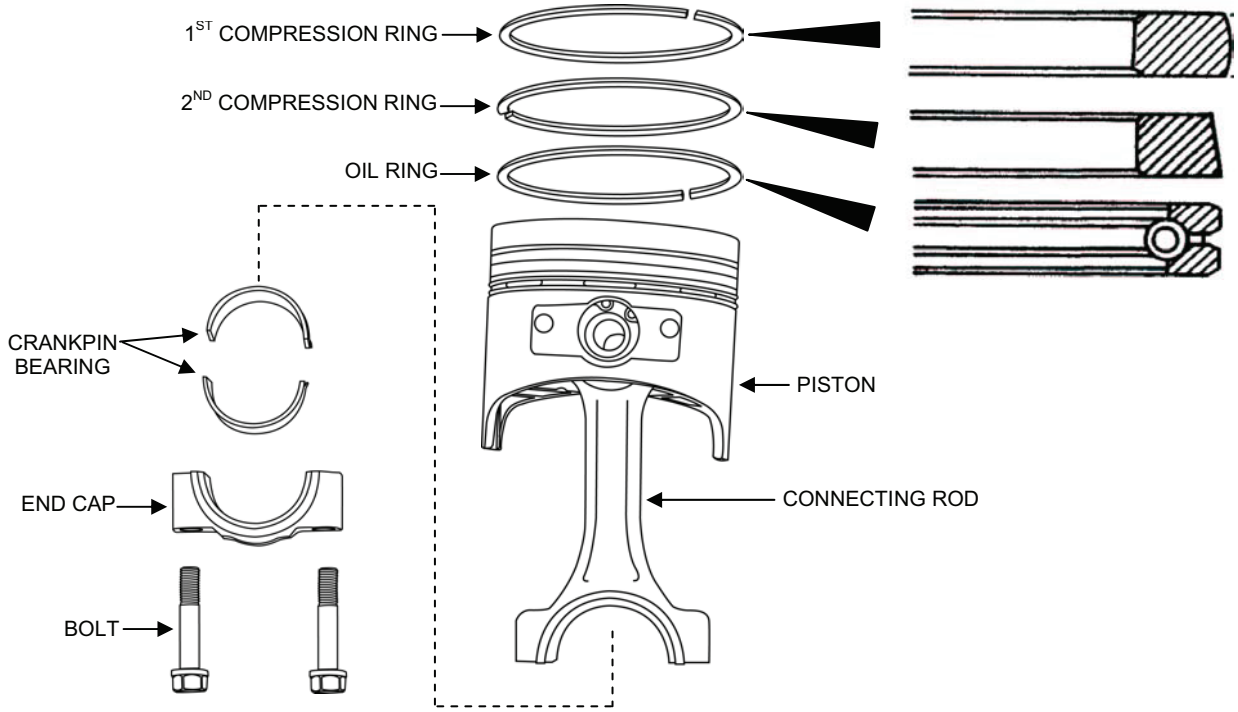

Figure 9. Piston Ring Removal.

Reassemble the diesel engine as follows:

1. Carefully clean each ring groove in the piston.
2. Using a ring spreader, install the new piston rings on the piston making sure each ring gap is offset 120º from the other ring gaps.
3. Thoroughly check and clean all parts.

NOTE

There is an orientation mark on the top of the piston. This mark must face the crankcase cover side of the engine when inserting the piston and connecting rod assembly into the top of the piston cylinder.

4. Apply oil to the outer surface of the piston and the inner surface of the cylinder.
5. Apply oil to the crank pin (the surface on the crankshaft to which the piston connecting rod is secured).
6. Insert the piston and connecting rod into the top of the piston cylinder.
7. Make sure the crankpin bearing halves are snapped into the connecting rod and the end cap.
8. Position the connecting rod onto the crank pin and install the end cap around the other side of the crank pin.
9. Secure the end cap to the connecting rod using the two connecting rod tightening bolts. Torque to 200 to 240 in-lbs.

NOTE

The fuel oil tappet fit in the sleeve is very precise. It may be necessary to rotate the fuel oil tappet until you are able to find the exact position that will allow it to be easily inserted into the sleeve. Do not force the fuel oil tappet into the sleeve.

10. Insert the fuel oil tappet into its sleeve (see Figure 7).
11. Insert the two valve tappets into their sleeves and push all the way in (see Figure 7)
12. Insert the camshaft. Make sure the single alignment mark on the camshaft gear is positioned between the two alignment marks on the front crankshaft gear. Rotate the crankshaft if necessary to ensure the marks are properly matched (see Figure 10).
13. Insert the balancer shaft. Make sure the alignment mark on the balancer shaft gear matches the alignment marks on the back crankshaft gear. Rotate the crankshaft if necessary to ensure the marks are properly matched (see Figure 10).

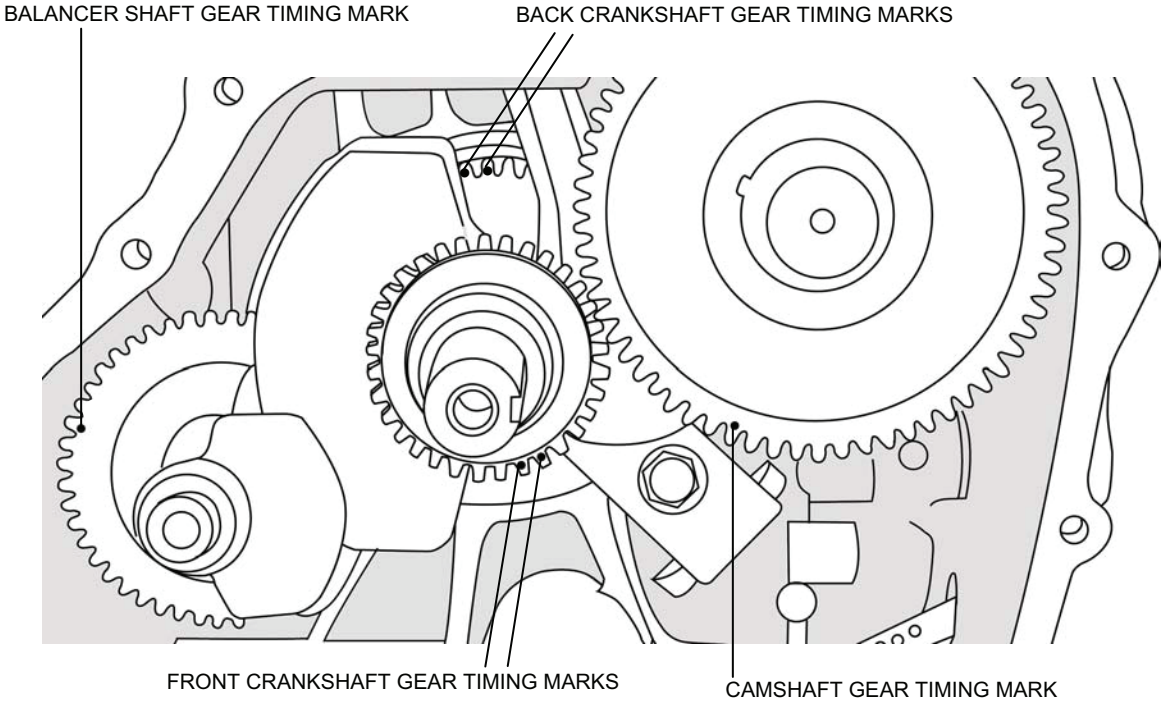

Figure 10. Crankshaft, Camshaft, and Balancer Shaft Timing Marks.

14. Install the new crankcase gasket and the crankcase cover on the engine.
15. Tighten the bolts in the sequence shown in Figure 11.
    a. Torque bolts 1 through 14 to 95-113 in-lbs.
    b. Torque bolt 15 last to 226-243 in.-lbs.

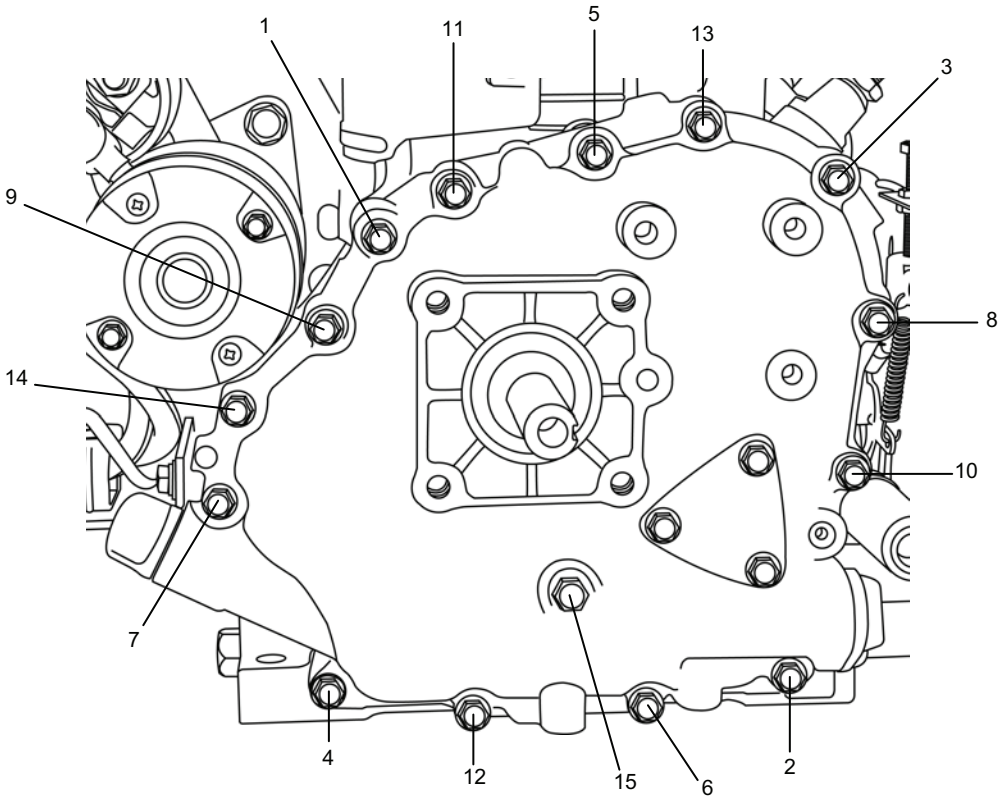

Figure 11. Crankcase Cover Bolt Tightening Sequence.

16. Install the cylinder head onto the engine as described earlier in this work package.
17. Install the following components onto the engine (WP 0011):
    a. Fuel pump assembly
    b. Fuel injection valve
    c. Muffler assembly
    d. Cooling fan case assembly
18. Make sure the oil drain plug is reinstalled.
19. Put approximately ¾ qt. oil in the engine.
20. Install the pump and adapter onto the engine (WP 0011).
21. Install the engine pump assembly onto the pump skid frame (WP 0011).
22. Slowly pull the recoil starter rope out past the skid frame and thread it through the rope guide.

END OF WORK PACKAGE

TACTICAL WATER PURIFICATION SYSTEM (TWPS) FIELD MAINTENANCE PROCEDURES MICRO-FILTRATION SYSTEM

0030 00

THIS SECTION COVERS:
Repair

INITIAL SETUP:

Maintenance Level
Field
Tools
Lifting Straps (2)
References:
Refer to TM 10-4610-309-23P for repair parts information
Personnel Required
Two
Equipment Condition
TWPS in short term shutdown
Entire air system bled down (WP 0015, TM 10-4610-309-10)

GENERAL:

This work package provides procedures for repairing components in the Micro-Filtration (MF) Assembly. The steps covered include:

- MF Assembly Removal
- MF Assembly Disassembly and Repair
- MF Assembly Reassembly
- MF Assembly Installation

MICRO-FILTRATION ASSEMBLY REPAIR:

Parts (TM 10-4610-309-23P):
O-Ring, 10540577
O-Ring, 10540578
Materials:
Lubricant, valve seal (WP 0038, Table 1, item 30)
Clean, dry lint-free rags (WP 0038, Table 1, item 39)
Equipment Condition:
TWPS in Short Term Shutdown, anticipated over 4 hours but less than 54 hours (WP 0015, TM 10-4610-309-10)
Entire air system bled down (WP 0015)

Repair the MF filter module assembly, including inspecting and replacing the module head O-rings, as follows:

NOTE

Tag each component as it is removed in the following steps, to make sure it is reinstalled in the same location.

MF Assembly Removal:

1. Remove the following MF feed components from the MF assembly as follows (see Figure 1):
    a. Remove Upper Feed Inlet Valve V-112.
    b. Disconnect the 15 psig air hose from Check Valve V-911.
    c. Remove Check Valve V-911 and Vent Valve V-114 from the upper feed inlet.
    d. Disconnect the electrical cable connected to MF Feed Pressure Transmitter PT-101.
    e. Remove the sanitary clamp from the 3-in tee piping.
    f. Remove Lower Feed Inlet Valve V-113 and the expansion joint and 3-in. tee piping above the valve.

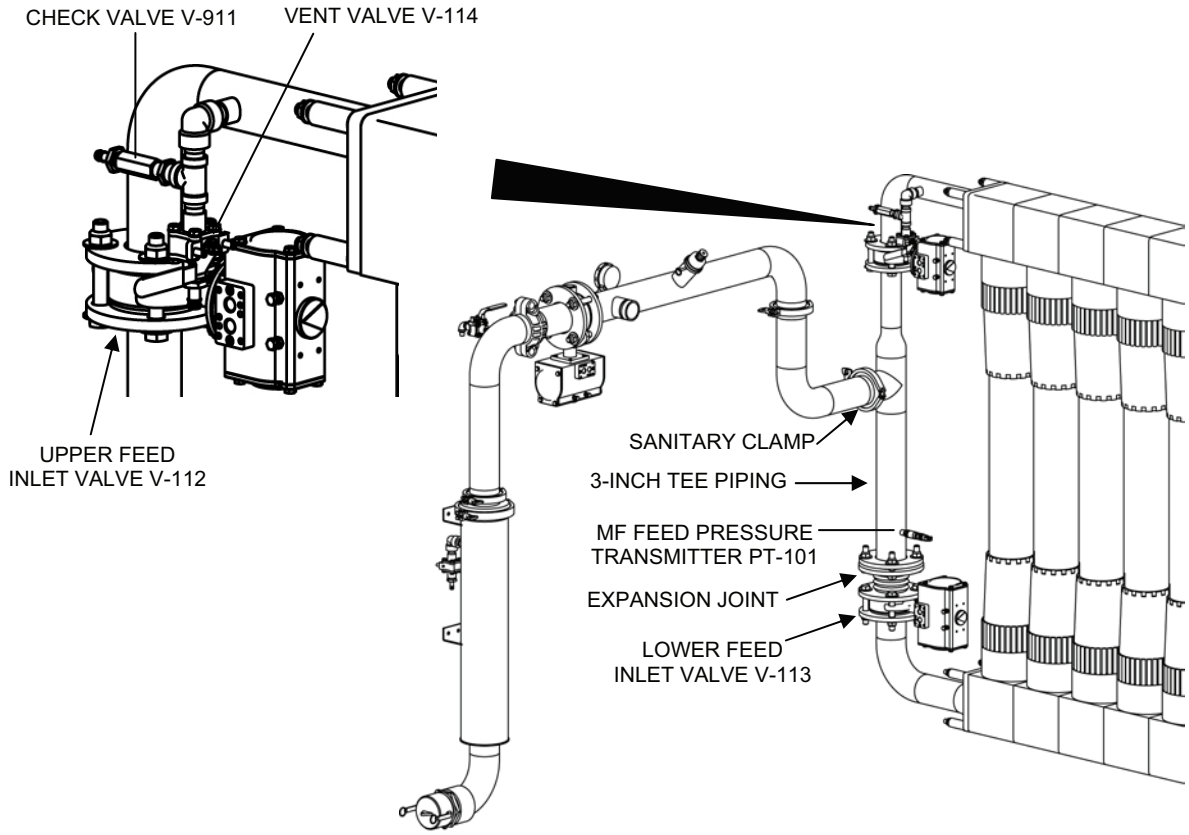

Figure 1. MF Feed Component Removal from the MF Assembly.

2. Remove the following MF backwash components from the MF assembly (see Figure 2):
   a. Tag and disconnect the air tubing from the actuator on Upper Backwash Out Valve V-401.
   b. Remove V-401.
   c. Remove the sanitary clamp, the flex strut pipe support, and the pipe section between the MF Assembly and valve V-401.
   d. Remove the expansion joint, the two sanitary clamps, and the pipe section between the MF Assembly and Lower Shell Out Valve V-402.
   e. Remove Shell Drain Valve V-403 and its extension pipe.

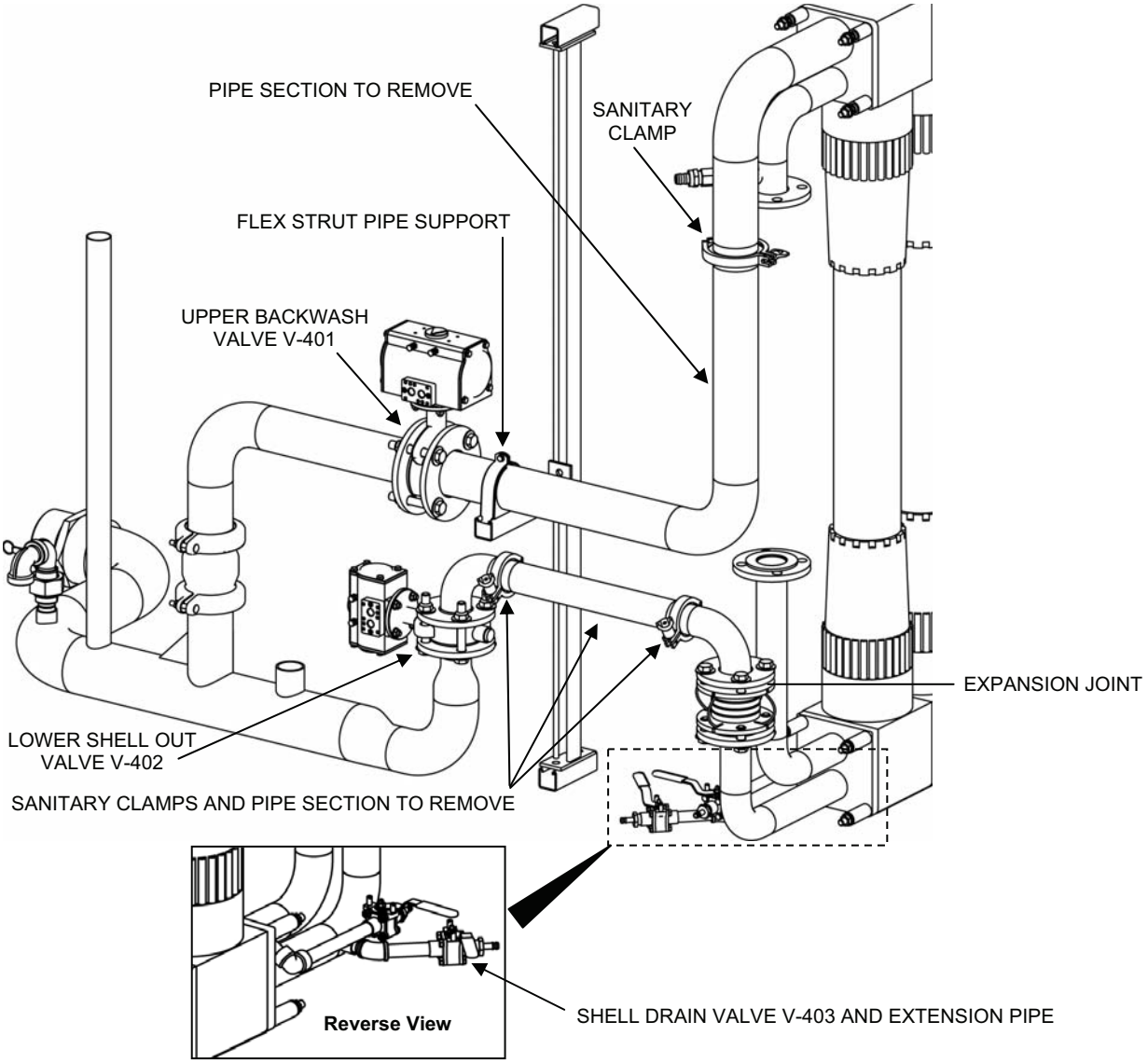

Figure 2. MF Backwash Component Removal from the MF Assembly.

3. Remove the following MF filtrate components from the MF assembly (see Figure 3):
    a. Tag and disconnect the air tubing from the actuator on Filtrate Flow Control Valve V-202
    b. Remove V-202.
    c. Tag and disconnect the electrical wire from Pressure Transmitter PT-102.
    d. Remove the flex strut pipe support between PT-102 and V-202.
    e. Remove the expansion joint below Upper Filtrate Valve V-201.
    f. Tag and disconnect tag the air tubing from the actuator on Upper Filtrate Valve V-201.
    g. Remove V-201 and the tee pipe section connected to it.
    h. Tag and remove the air hose connected to Check Valve V-912.
    i. Remove Check Valve V-912.
    j. Remove Filtrate Drain Valve V-203 and extension pipe.

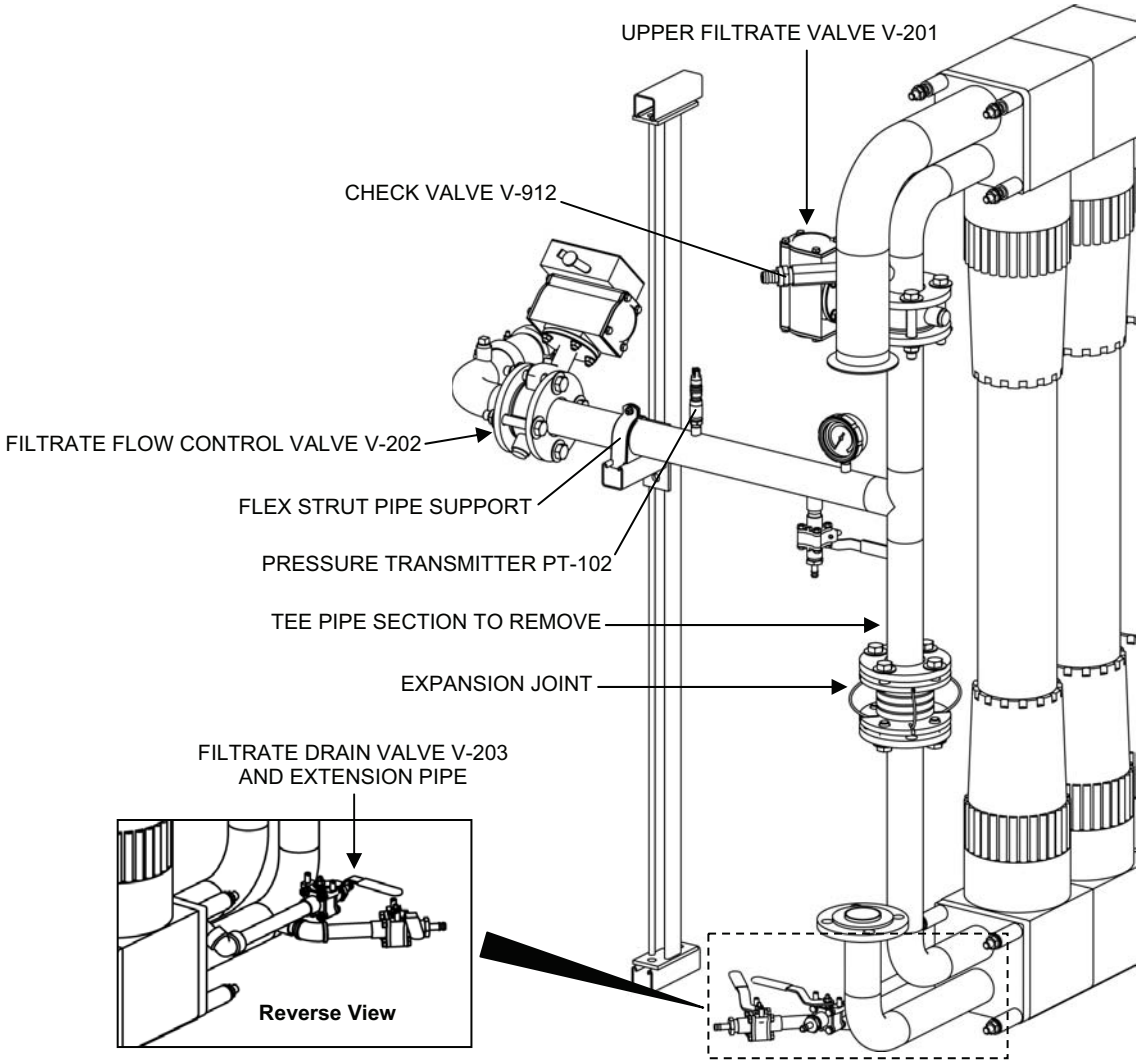

Figure 3. MF Filtrate Valve and Pipe Section Removal.

4. Remove the two vertical flat rack braces (3 hex cap screws, 3 lock washers, and 3 flat washers at the top and bottom of both braces) that are located in front of the MF filter assembly (A-TWPS only) (see Figure 4).

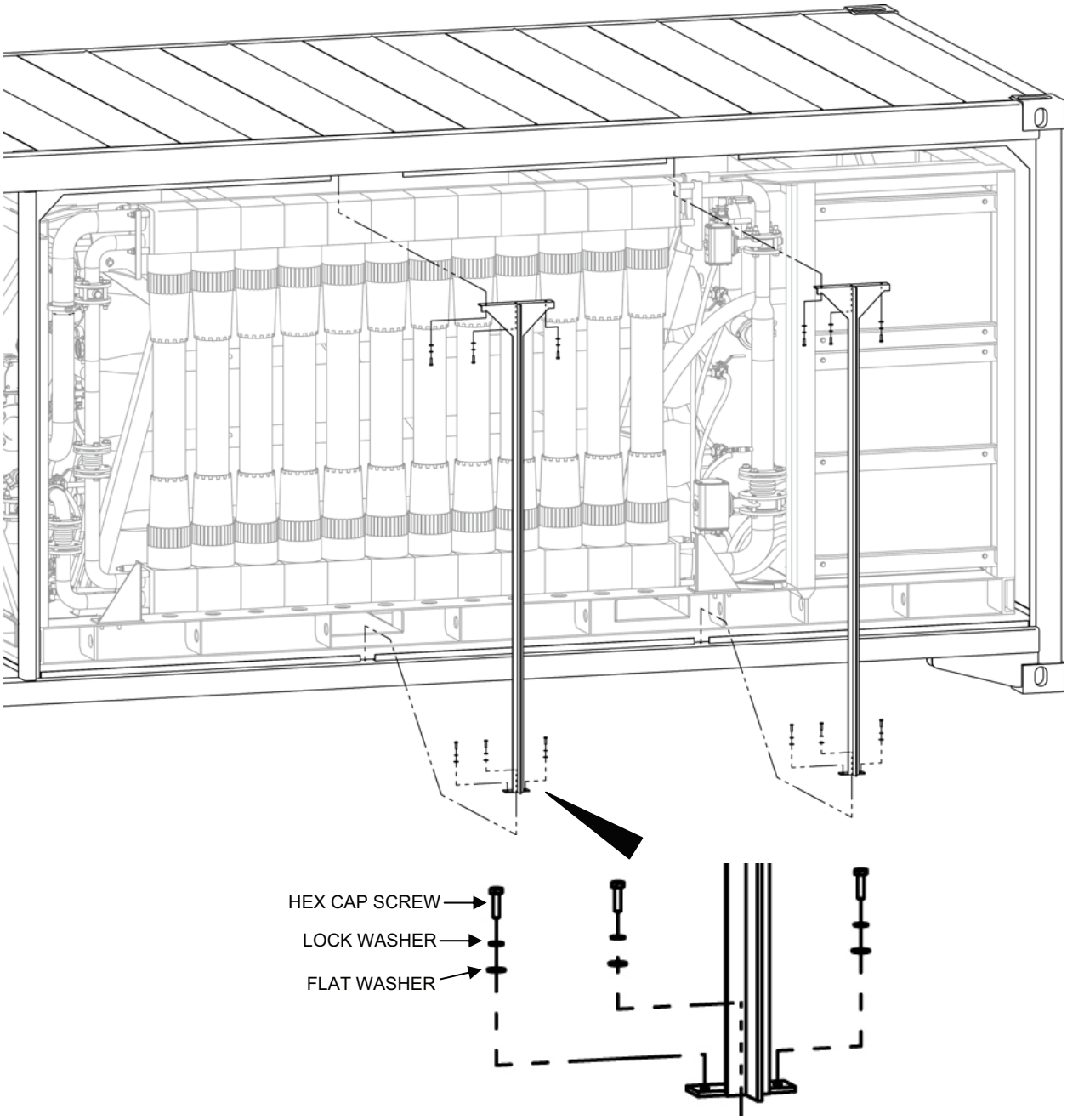

Figure 4. A-TWPS Vertical Flat Rack Brace Removal.

5. Remove the MF assembly from the TWPS as follows:

CAUTION

If the MF assembly is set down vertically when it is removed from the TWPS, the MF module tubes can compress down unless bracing is placed between the MF assembly headers. It is recommended that the MF assembly headers be braced before the assembly is removed.

a. Insert a brace, such as a 2x4 length of wood or metal, between the upper and lower MF assembly headers at both ends of the assembly and secure with duct tape, rope, or some other temporary means of keeping the brace in place (see Figure 5).

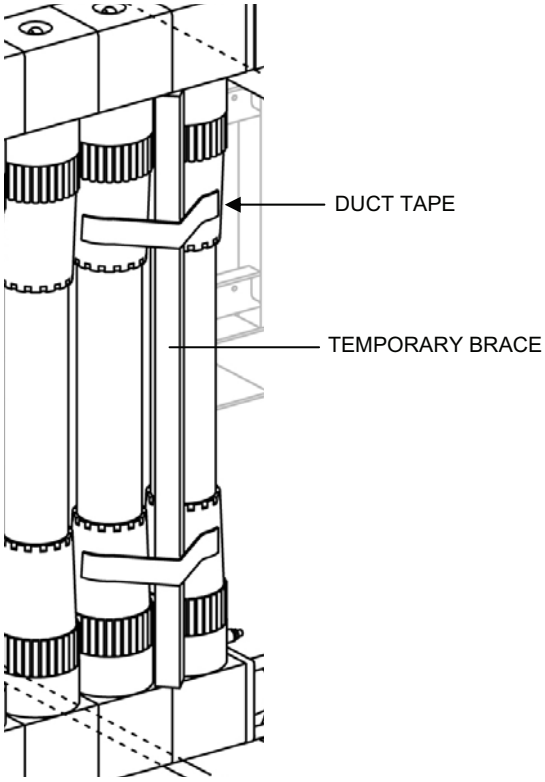

Figure 5. Temporary Bracing for MF Assembly Removal.

CAUTION

Potential for damaging the MF assembly inlet and outlet pipes. Lifting straps should not be placed under the MF assembly inlet and outlet pipes. The pipes are not designed to support the weight of the MF assembly. Failure to observe this warning could result in damage to the pipes.

b. Attach one lifting strap under the lower spacers at the top ends of the MF assembly.
c. Remove the slack from the straps, but do not apply any lifting pressure.
d. Remove the two hex cap screws, four flat washers, and two nuts that secure the top left mounting bracket to the TWPS frame (as viewed from the back of the TWPS).
e. Remove the two hex cap screws, one lock washer, and three flat washers that secure the top right mounting bracket to the TWPS frame (as viewed from the back of the TWPS).
f. Remove the four hex cap screws, eight flat washers, and four nuts that secure the two bottom mounting brackets to the TWPS frame.
g. Slide the bottom mounting brackets off the MF assembly as the assembly is raised off the TWPS.

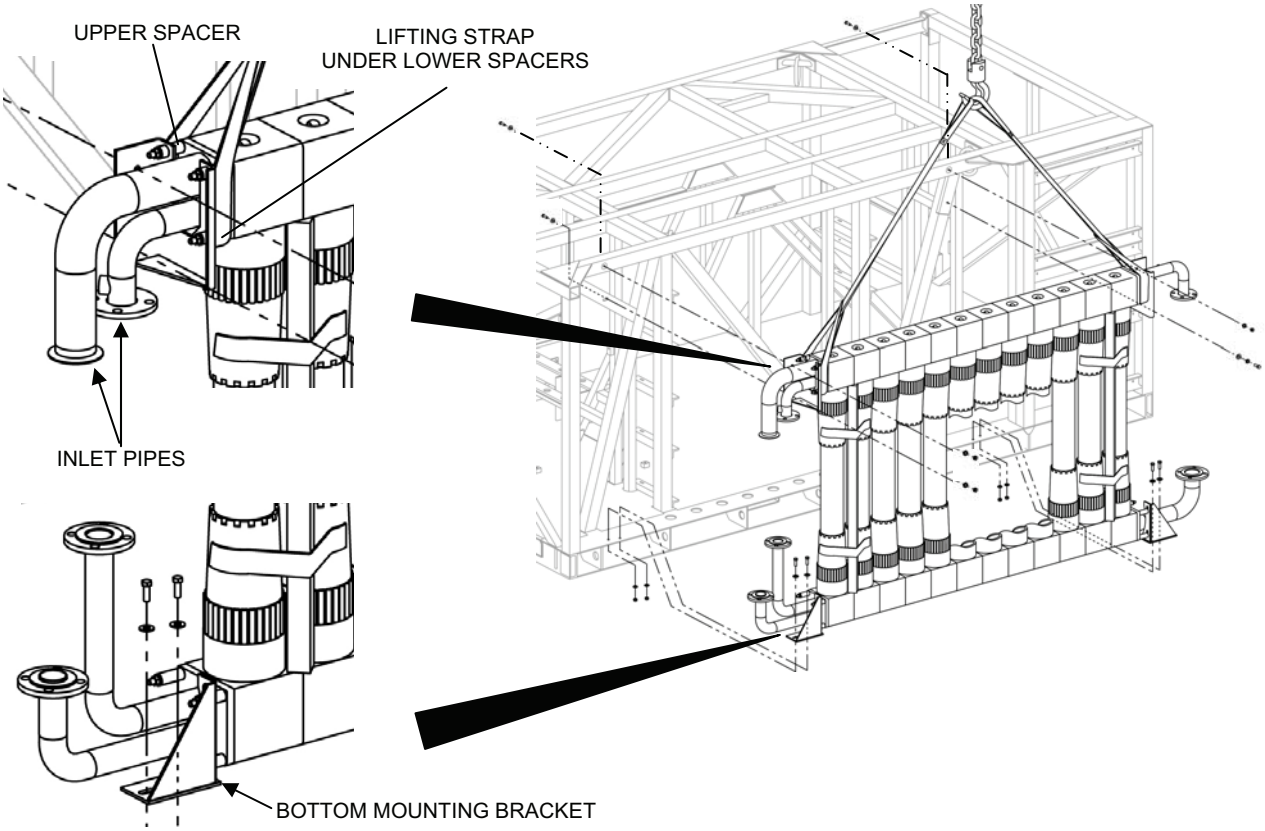

Figure 6. TWPS MF Assembly Removal.

h. Carefully move the MF assembly and lay it on a clean tarp on the ground.
i. Cover all open piping on the TWPS.

MF Assembly Disassembly and Repair:

1. Disassemble and repair the individual filter modules as follows (see Figure 7):
   a. From the feed end of the filter assembly, assign a number to each module.
   b. Remove the 4 nuts, lock washers, and flat washers from the 4 ends of the assembly.
   c. Remove the 4 mounting brackets, 8 shouldered spacers, and 8 long spacers.
   d. Label each bracket to indicate the location from which it was removed.
   e. Remove the 4 piping adapters.
   f. Remove the 8 short adapters from the module head pieces at the feed end of the assembly.
   g. Separate the first 4 modules by removing both the top and bottom rods; the separation must be wide enough to see the area where both inner and outer o-rings mount.
   h. Remove both inner and outer o-rings from the top and bottom of the modules.
   i. Using lint-free rags, clean the areas on both sides at the top and bottom of the module where the o-rings mount.
   j. Inspect the area for damage. If damage is discovered, replace the module.
   k. Lubricate the new o-rings using the valve seal lubricant and install the o-rings.
2. Move the four modules back together.
3. Repeat steps e through j for the rest of the modules in groups of four.

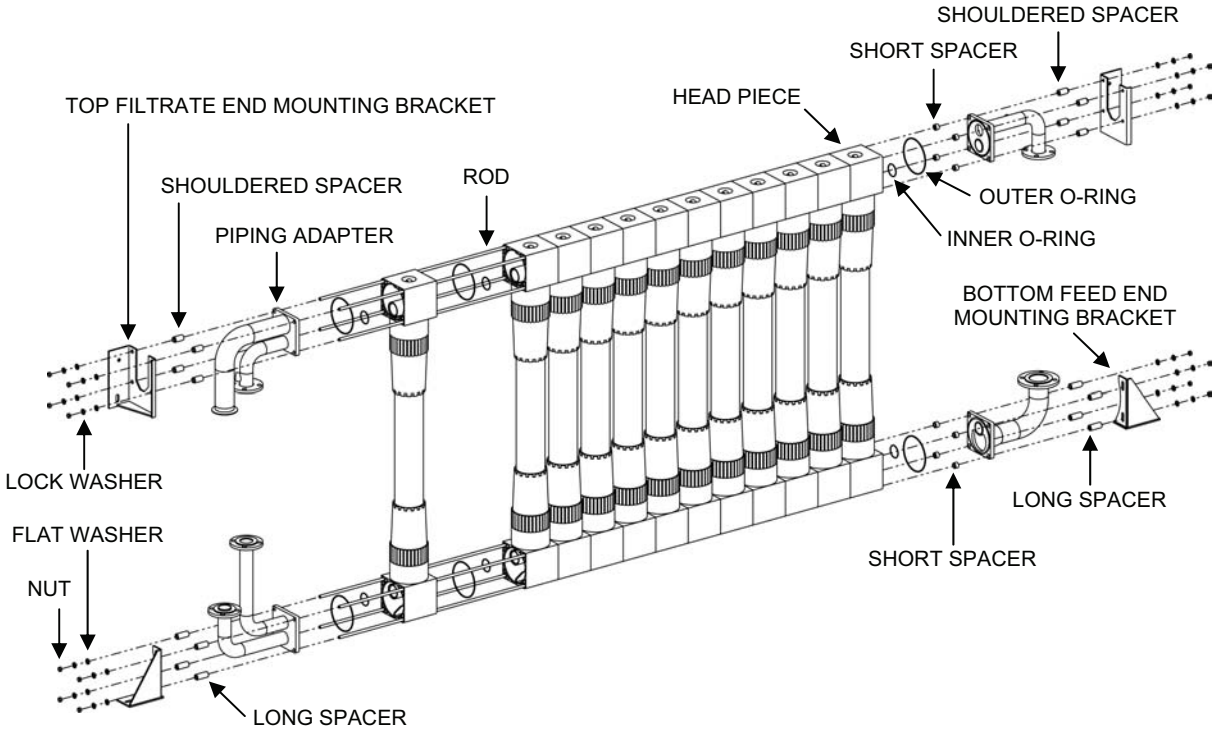

Figure 7. MF Assembly Module Repair.

MF Assembly Reassembly:

1. Assemble the MF assembly as follows (see Figure 7):
   a. Make sure that the outer module o-rings have been replaced as described in the repair procedures.
   b. Insert the four small spacers in the four corner holes of the top and bottom MF module head pieces at the inlet end of the MF assembly (see Figure 8).
   c. Secure the two top piping adapters, shouldered spacers (see Figure 8 for proper shouldered spacer orientation), and mounting brackets to the top rods using the nuts and washers removed earlier. Tighten just snug tight until the bottom hardware is installed.
   d. Secure the two bottom piping adapters and long spacers to the bottom rods using the nuts and washers removed earlier. Tighten snug tight.
   e. Torque the nuts at one end of the top and bottom MF assembly rods to 22.5. ft-lbs.

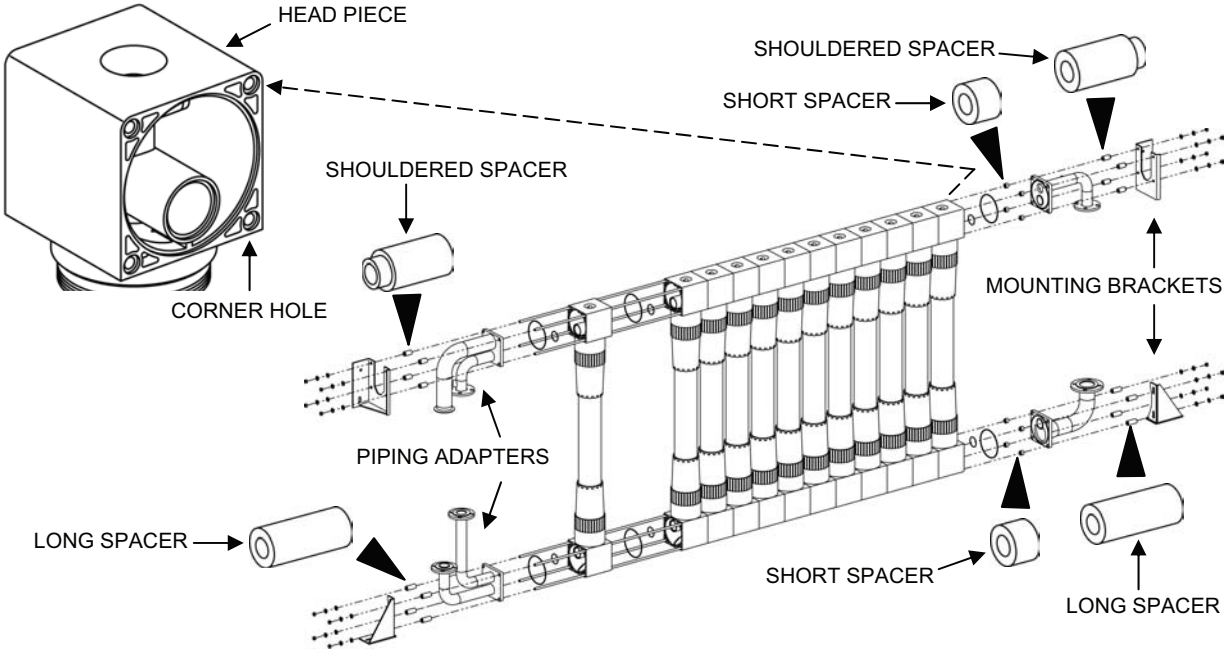

Figure 8. MF Assembly Spacer Installation Detail.

CAUTION

If the MF assembly is stood up vertically before it is lifted and installed on the TWPS, the MF module tubes can compress down unless bracing is placed between the MF assembly headers. It is recommended that the MF assembly headers be braced before the assembly is moved.

2. Insert a brace, such as a 2x4 length of wood or metal, between the upper and lower MF assembly headers at both ends of the assembly and secure with duct tape, rope, or some other temporary means of keeping the brace in place (see Figure 5).

MF Assembly Installation:

1. Install the MF assembly onto the TWPS as follows:
    a. Carefully lift the top end of the assembly up on end then move into position.
    b. Lift the assembly up onto the TWPS, position the bottom mounting brackets over the bottom spacers, and carefully set the assembly in place.
    c. Bolt both bottom mounting brackets to the TWPS frame, but do not tighten (see Figure 6).
    d. Bolt both top mounting brackets to the TWPS frame. Tighten the top bracket at the filtrate end of the MF assembly first, then tighten the top bracket at the feed end.
    e. Make sure that the top of the top mounting brackets are flush with the top of the frame.
    f. Tighten all remaining mounting bolts and remove the lifting straps.
    g. Remove the temporary bracing that was secured between the upper and lower MF assembly headers at both ends of the assembly.
2. Install the following MF filtrate out components (see Figure 3):
    a. Filtrate Drain Valve V-203 and its extension pipe.
    b. Check Valve V-912.
    c. Air Hose to Check Valve V-912.
    d. Upper Filtrate Valve V-201 and the tee pipe section.
    e. Air tubing to the actuator on V-201.
    f. The expansion joint below Upper Filtrate Valve V-201.
    g. The flex strut pipe support between PT-102 and V-202.
    h. Electrical wire to Pressure Transmitter PT-102.
    i. Filtrate Flow Control Valve V-202.
    j. Air tubing to the actuator on V-202.
3. Install the following MF backwash out components (see Figure 2):
    a. Shell Drain Valve V-403 and its extension pipe.
    b. The expansion joint, the two sanitary clamps, and the pipe section between the MF Assembly and Lower Shell Out Calve V-402.
    c. Upper Backwash Out Valve V-401.
    d. The sanitary clamp, flex strut pipe support, and pipe section between the MF Assembly and valve V-401.
    e. Air tubing to the actuator on Upper Backwash Out Valve V-401.
4. Install the following MF feed components (see Figure 1).
    a. Lower Feed Inlet Valve V-113 and the expansion joint and 3-in. tee piping above the valve.
    b. The sanitary clamp on the 3-in tee piping.
    c. Electrical wire to MF Feed Pressure Transmitter PT-101
    d. Check Valve V-911 and Vent Valve V-114 to the upper feed inlet.
    e. The 15 psig air hose to Check Valve V-911.
    f. Upper Feed Inlet Valve V-112.
5. Trace through the MF system piping to ensure all components are in place and that the connections are tight.
6. Follow the procedures for startup following a short-term shutdown (see WP 0013, TM 10-4610-309-10).
7. Run the TWPS and check for leaks.

END OF WORK PACKAGE

TACTICAL WATER PURIFICATION SYSTEM (TWPS) FIELD MAINTENANCE PROCEDURES REVERSE OSMOSIS SYSTEM

0031 00

THIS SECTION COVERS:
Replace

INITIAL SETUP:

Maintenance Level
Field
Tools
Forklift or other suitable lifting device
Reference:
Refer to TM 10-4610-309-23P for repair parts information
Personnel Required
Two
Equipment Condition
Extended shut-down

GENERAL:

The procedures covered in this work package include:

- RO Feed Tank Replacement
- RO Vessel Replacement

REPLACE

RO Feed Tank Replacement:

Parts (TM 10-4610-309-23P):
- RO Feed Tank
- Pipe Coupling Gasket
- 4 In. Sanitary Clamp Gasket
- 2½ In. Sanitary Clamp Gasket
- 2 3/8 In. Expansion Joint Gasket
- 2 In. Rubber Hose
- 1 7/8 In. Rubber Hose

Material:
- Antiseizing tape (WP 0038, Table 1, item 49, 50)
- Soap water solution

Equipment Condition:
- TWPS in Short Term Shutdown with drain down (WP 0015, TM 10-4610-309-10)

Replace the RO feed tank as follows:

(Army only) Remove the TWPS skid from the flat rack. Refer to WP 0032.

Remove the RO feed tank as follows:

1. Remove the TWPS frame cross braces at the right end of the TWPS as follows:
   a. Remove the 4 bolts, 4 lock washers, and 4 flat washers from the 2 upper ends of the frame cross braces at the right end of the TWPS.
   b. Remove the 6 bolts, 12 flat washers, and 6 lock nuts from the middle of and the lower ends of the cross braces.
   c. Tag and remove the frame cross braces (see Figure 1).

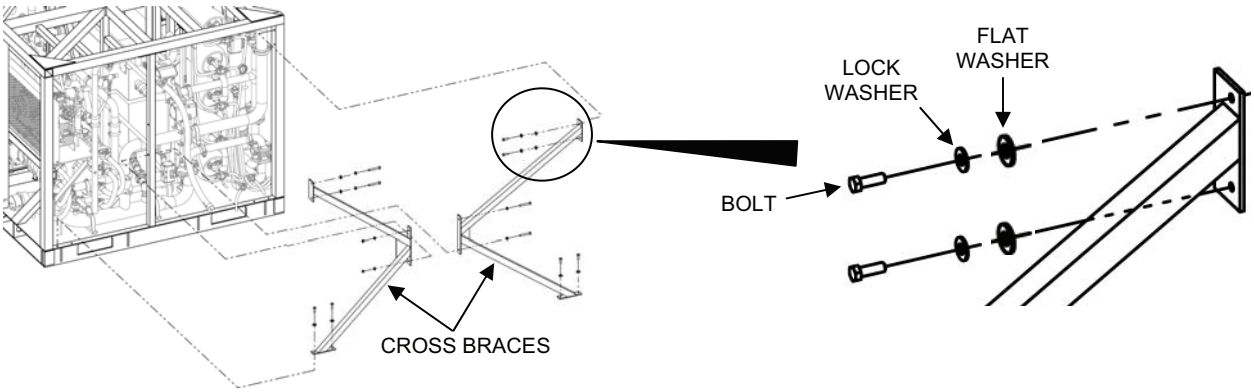

Figure 1. TWPS Frame Cross Brace Removal – Right End.

2. Remove the following connections from the front and bottom of the RO feed tank (see Figure 2):
   a. Unscrew and remove RO Feed Tank Auxiliary Drain Valve V-210 from the tank.
   b. Loosen the three hose clamps that secure a hose to the re-circulation pipe and the tank. Pull the re-circulation pipe and hose off the tank adapter. Inspect the hose for damage or deterioration and replace if needed.
   c. Disconnect the cable to Level Transmitter LT-201. Unscrew and remove the elbow pipe and transmitter from the tank.
   d. Loosen the four hose clamps that secure the cleaning return pipe to the tank adapter. Pull the cleaning return pipe and hose off the tank cleaning return inlet adapter. Inspect the hose for damage or deterioration and replace if needed.
   e. Loosen the four hose clamps that secure a hose to the tank outlet pipe and the RO feed pump suction pipe. If necessary, remove the four cap screws, washers, and nuts that secure the suction pipe to the inlet flange of the RO feed pump. Pull the hose off the tank outlet pipe. Inspect the hose for damage or deterioration and replace if needed.
   f. Remove the HP pump cooling water return tubing from the tee connection and unscrew the tee from the tank.

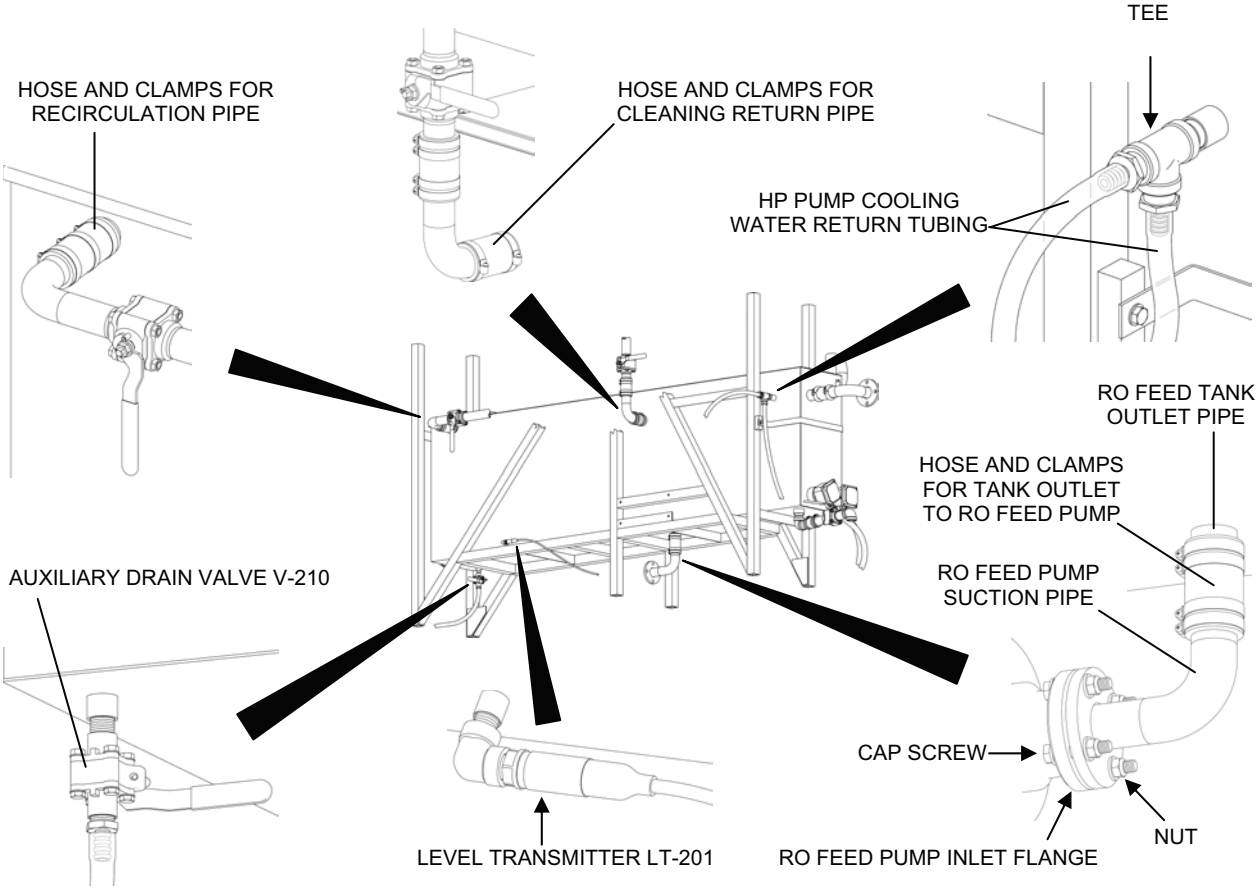

Figure 2. RO Feed Tank Front and Bottom Connections Removal.

3. Remove the MF filtrate pipe section at the right end of the RO feed tank as follows (see Figure 3):
    a. Tag and disconnect air tubing from the actuator for valve V-201 and from the positioner for valve V-202.
    b. Unscrew Filtrate Pressure Transmitter PT-102.
    c. Loosen the hose clamp on MF Filtrate Sample/Drain Valve V-204. Tag and remove the hose and clamp. Inspect the hose for damage or deterioration and replace if needed.
    d. Remove Filtrate Flow Control Valve and Actuator V-202.
    e. Remove the pipe coupling from the MF inlet to the RO feed tank and lift out the elbow pipe section.
    f. Inspect the pipe coupling gasket for damage or deterioration and replace if needed.
    g. Unbolt and remove the expansion joint from the bottom of the MF filtrate pipe section.
    h. Inspect the expansion joint gasket for damage or deterioration and replace if needed.
    i. While one person supports the MF filtrate pipe section, remove Upper Filtrate Outlet Valve and Actuator V-201.
    j. Unclamp the flex strut pipe support in the middle of the MF filtrate pipe section.
    k. Lift the MF filtrate pipe section out.

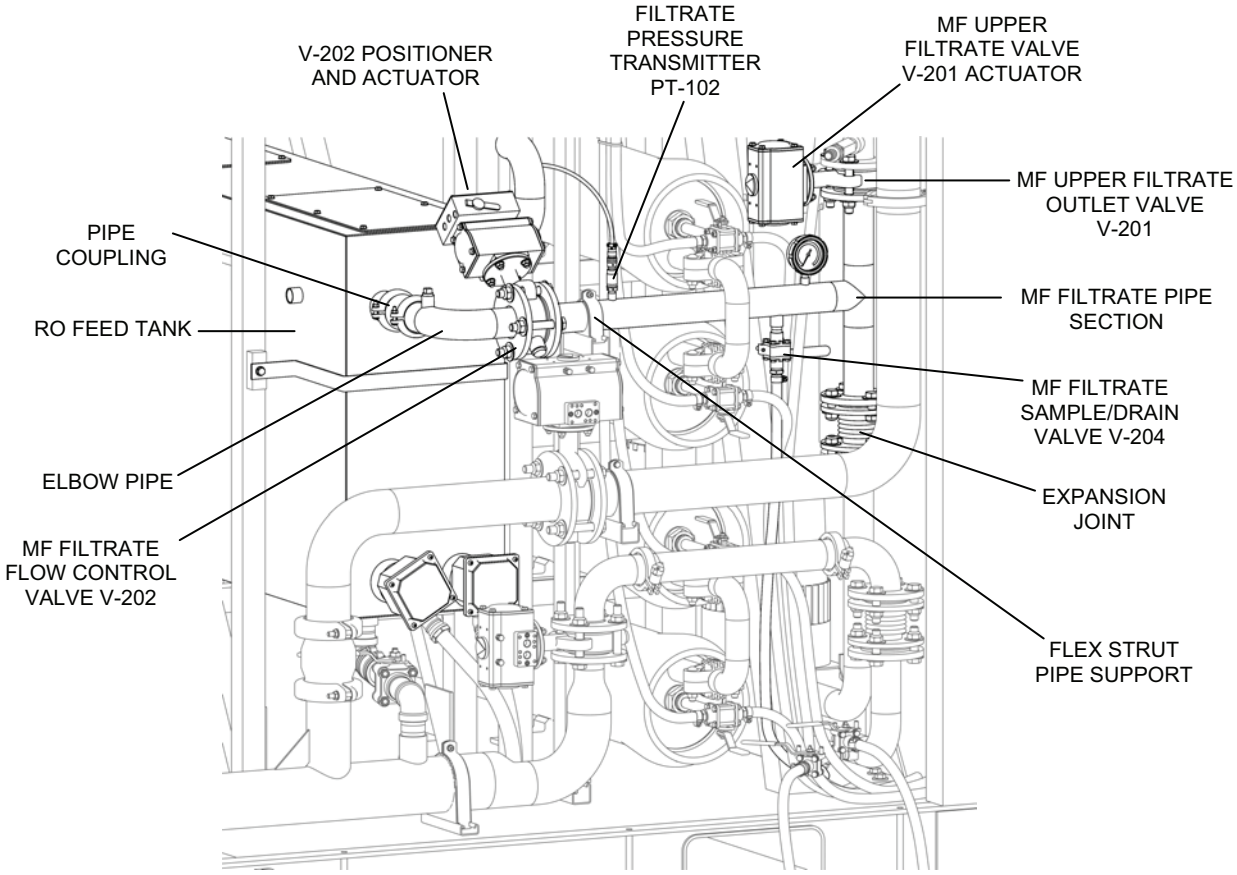

Figure 3. MF-Filtrate-to-RO Feed Tank Pipe Section Removal.

4. Remove the upper MF backwash pipe section as follows (see Figure 4):
   a. While one person supports the upper MF backwash pipe section, remove the following components from the pipe section:
      1) Tag and disconnect the air tubing from the actuator for Valve V-401.
      2) Remove the pipe coupling that connects the upper MF backwash pipe section to the waste out pipe section.
      3) Inspect the pipe coupling gasket for damage or deterioration and replace if needed.
      4) Remove the sanitary clamp at the top right end of the upper MF backwash pipe section.
      5) Inspect the sanitary clamp gasket for damage or deterioration and replace if needed.
      6) Unclamp the flex strut pipe support in the middle of the upper MF backwash pipe section.
   b. Lift the upper MF backwash pipe section out.

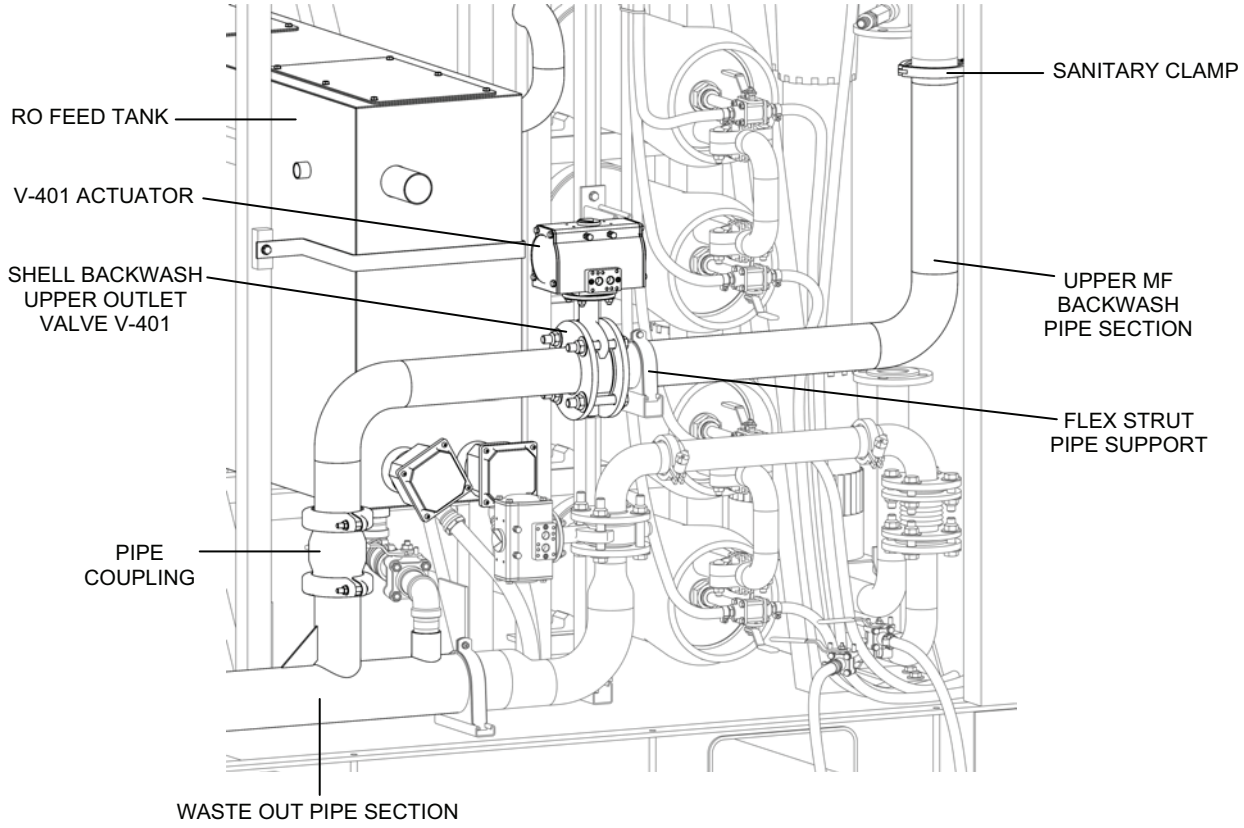

Figure 4. Upper MF Backwash Pipe Section Removal.

5. Remove the lower MF backwash pipe section as follows (see Figure 5):
    a. Tag and disconnect the air tubing from the actuator for Valve V-402.
    b. Remove the Shell Backwash Lower Outlet Valve and Actuator V-402.
    c. Remove the far right sanitary clamp and lift out the elbow pipe and the short pipe section that remain connected by another sanitary clamp.
    d. Inspect the sanitary clamp gasket for damage or deterioration and replace if needed.

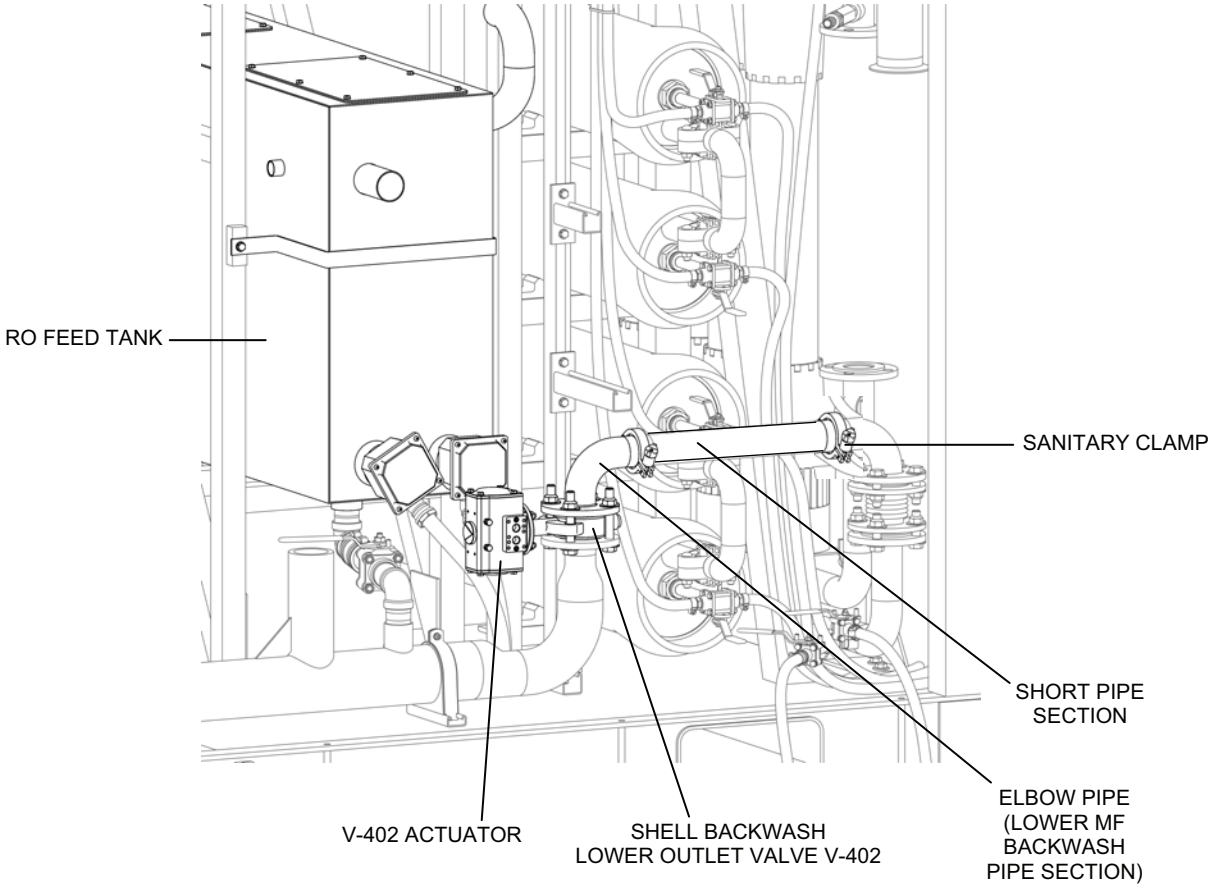

Figure 5. Lower MF Backwash Pipe Section Removal.

6. Disconnect the power cables from RO Feed Tank Heaters H-1 and H-2 as follows (see Figure 6):
   a. Remove the four screws from the heater cap and remove the cap from the terminal box.
   b. Tag and disconnect the 3 phase-wires and the ground wire from the heater terminals.
   c. Unscrew the lock nut inside the terminal box from the 45-degree box connector.
   d. Pull the connector and conduit as an assembly out of the terminal box. Retain the packing/retainer.

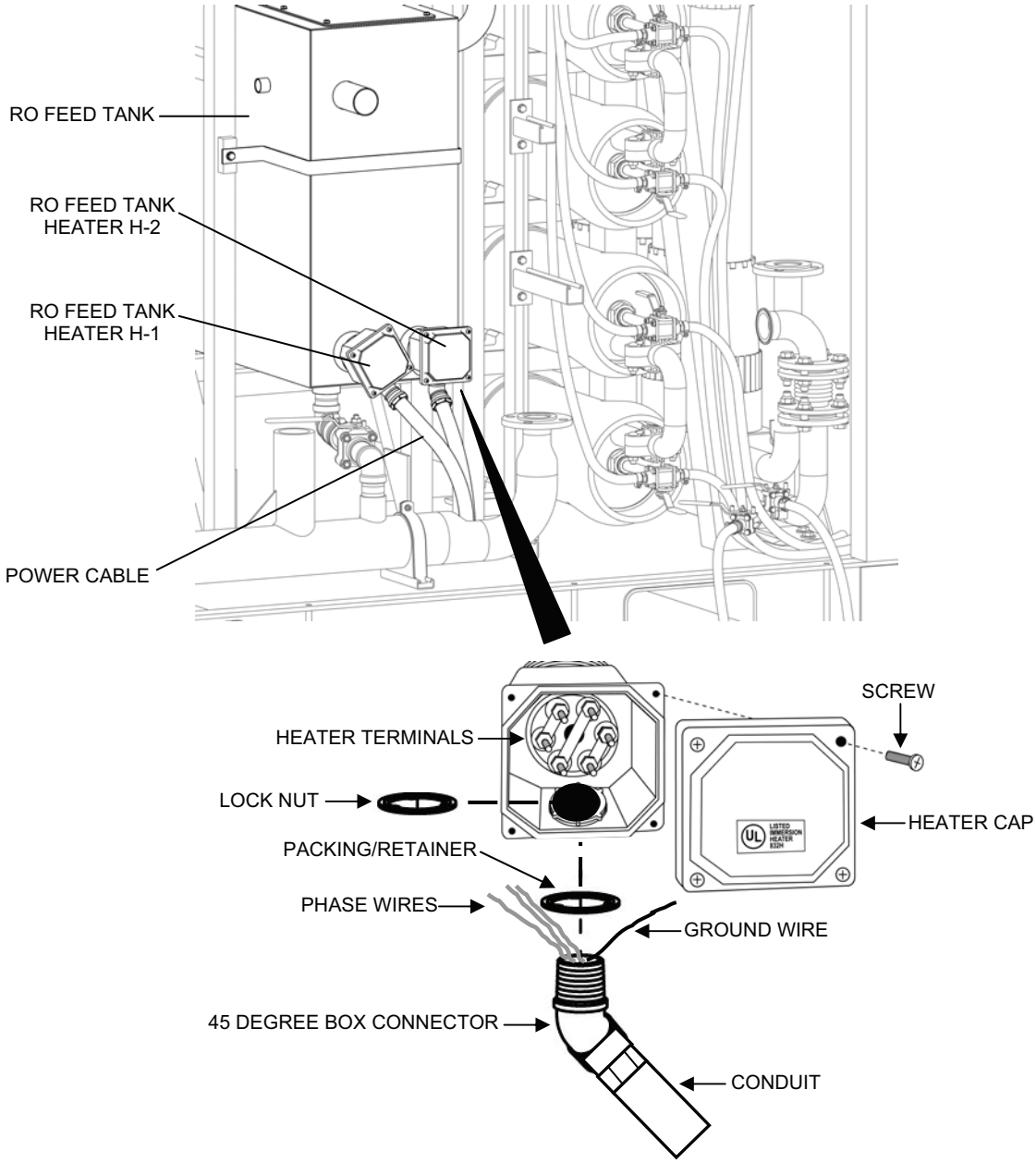

Figure 6. Heater Cable Removal.

7. Remove RO Feed Tank Drain Valve V-412 and pipe assembly from the RO feed tank to the waste out pipe spool as follows (see Figure 7):
    a. Remove the 4 hose clamps from the hose in the RO feed tank drain pipe.
    b. Unthread and remove the pipe section containing RO Feed Tank Main Drain Valve V-412 from the pipe elbow at the waste out pipe.
    c. Remove the hose from the RO feed tank drain pipe. Inspect the hose for damage or deterioration and replace if needed.
    d. Remove the pipe nipple, pipe elbow, and straight pipe from the RO feed tank drain as an assembly.

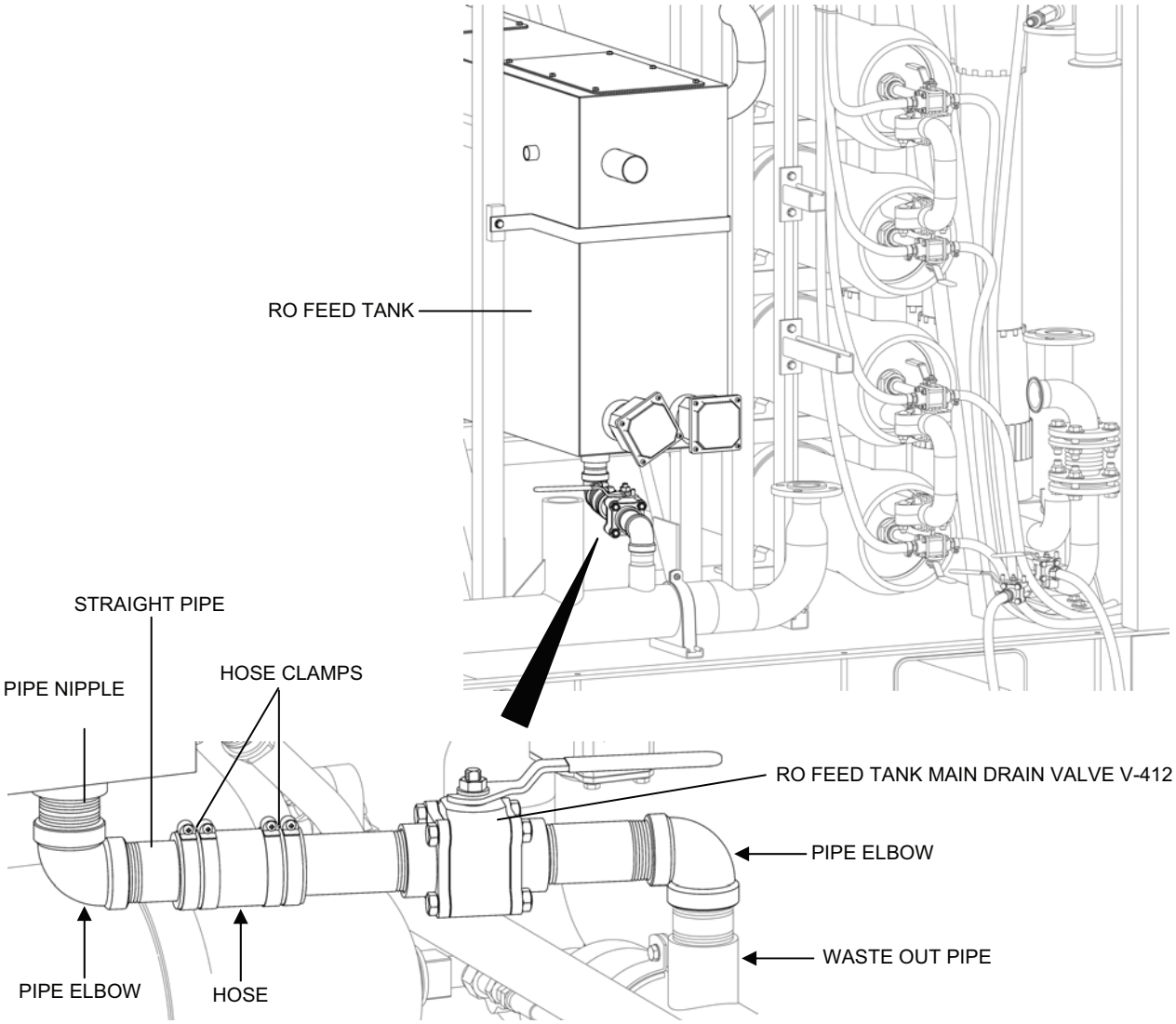

Figure 7. RO Feed Tank Drain Pipe Assembly Removal.

8. Remove the RO feed tank from the TWPS frame as follows (see Figure 8):
   a. Remove the bolt, lock washer, and flat washer that secure the tank tab to the TWPS frame at the temperature gauge end of the tank.
   b. Remove the 2 bolts, 2 lock washers, 2 flat washers, and retaining strap that secure the tank to the TWPS frame at the tank heater end of the tank.

WARNING

The RO feed tank is heavy. Use an appropriate lifting device to lift and remove the RO feed tank. Failure to observe this warning may result in back injury.

   c. Lift and move the RO feed tank out of the right end of the frame, taking care that the drain fittings and outlet tube at the bottom of the RO feed tank clear the TWPS frame.
   d. Remove RO Feed Pump Inlet Strainer S-4 from inside the tank. Refer to WP 0013.
   e. Remove the two heaters from the tank. Refer to WP 0013.

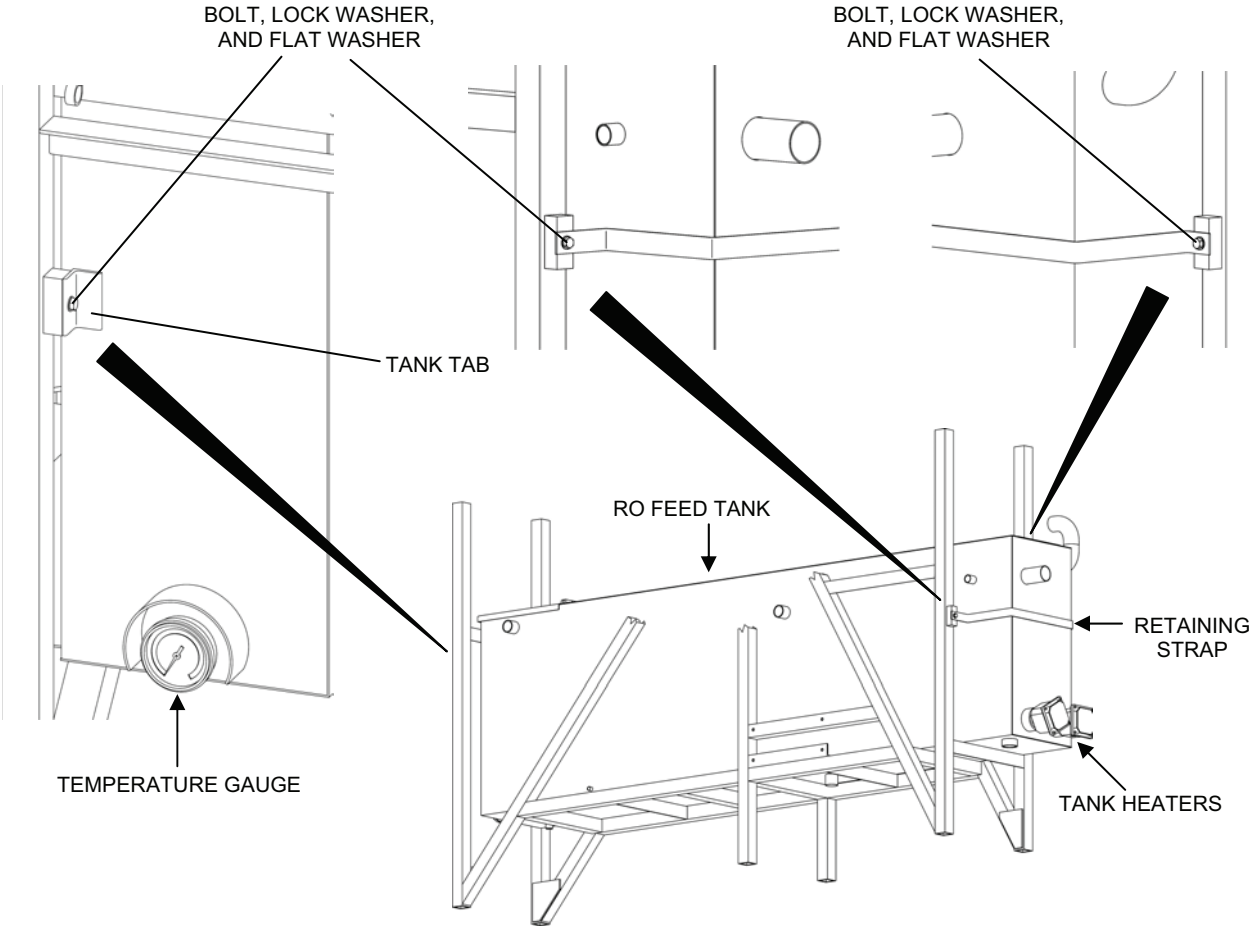

Figure 8. RO Feed Tank Removal from TWPS Frame.

Install a new RO feed tank as follows:

1. Install a secure the new RO feed tank to the TWPS frame as follows (see Figure 8):
   a. Install the two heaters in the new tank. Refer to WP 0013.
   b. Install the RO Feed Pump Inlet Strainer S-4 in the new tank. Refer to WP 0013.

WARNING

The RO feed tank is heavy. Use an appropriate lifting device to lift and remove the RO feed tank. Failure to observe this warning may result in back injury.

   c. Lift and move the RO feed tank into the right end of the frame, taking care that the drain fittings and outlet tube at the bottom of the RO feed tank clear the TWPS frame.
   d. Secure the tab at the temperature gauge end of the tank to the TWPS frame using the flat washer, lock washer, and bolt removed earlier.
   e. Secure the tank heater end of the tank to the TWPS frame using the retaining strap, 2 flat washers, 2 lock washers, and 2 bolts removed earlier.
2. Clean the external threads on all threaded components that were removed from the old RO feed tank.
3. Install RO Feed Tank Main Drain Valve V-412 and the pipe run from the RO feed tank to the waste out pipe as follows (see Figure 7):
   a. Apply antiseizing tape to the external threads of the pipe nipple on the elbow that was removed from the drain of the old tank. Thread the pipe assembly into the drain of the new tank. Make sure the pipe assembly is positioned as shown in Figure 7.
   b. Apply soapy water to the straight pipe on the RO feed tank drain and the end of the pipe section containing RO Feed Tank Drain Valve V-412.
   c. Slide the hose clamps and hose over the two pipe ends. Do not tighten the hose clamps yet.
   d. Apply antiseizing tape to the external threads of the pipe section containing RO Feed Tank Drain Valve V-412. Thread the pipe onto the pipe elbow at the waste out pipe.
   e. Position the hose and hose clamps, then tighten the hose clamps.
4. Connect the power cables to both RO feed tank heaters H-1 and H-2 as follows (see Figure 6):
   a. Make sure the packing/retainer is over the threads of the 45 degree box connector.
   b. Insert the 45-degree box connector, with the conduit attached, through the hole in the bottom of the terminal box.
   c. Thread the lock nut onto the box connector inside the terminal box and tighten to secure the connector to the box.
   d. Connect the heater cable wires to the heater terminals in accordance with the wire tags.
   e. Secure the heater cap onto the heater using the four screws..
5. Install the lower MF backwash pipe section at the right end of the tank as follows (see Figure 5):
   a. Position the left elbow pipe and short pipe section assembly.
   b. Secure the right end of the short pipe to the right elbow pipe using the sanitary clamp.
   c. Install Shell Backwash Lower Outlet Valve and Actuator V-402.
   d. Connect the air tubing to the actuator for Valve V-402 in accordance to the tags.
6. Install the upper MF backwash pipe section at the right end of the tank as follows (see Figure 4):
   a. Position the upper MF backwash pipe section as shown in Figure 4.
   b. While one person supports the upper MF backwash pipe section, secure the pipe section into place as follows:
      1) Clamp the flex strut pipe support to the middle of the horizontal pipe.

2) Secure the top right end of the upper MF backwash pipe section using the sanitary clamp that was removed earlier.
3) Secure the upper MF backwash pipe section to the lower MF backwash pipe section using the pipe coupling that was removed earlier.

c. Connect the air tubing to the actuator for Valve V-401 in accordance to the tags.

7. Install the MF filtrate pipe section at the right end of the tank as follows (see Figure 3):
   a. Position the MF filtrate pipe section as shown in Figure 3.
   b. While one person supports the MF filtrate pipe section, secure the pipe section into place as follows:
      1) Loosely clamp the flex strut pipe support to the middle of the MF filtrate pipe.
      2) Install Upper Filtrate Outlet Valve and Actuator V-201.
      3) Bolt the expansion joint to the bottom of the MF filtrate pipe section.
      4) Position the elbow pipe section as shown in Figure 3.
      5) Connect the elbow pipe section to the RO tank using the pipe coupling that was removed earlier.
      6) Install Filtrate Flow Control Valve and Actuator V-202.
      7) Tighten the flex strut pipe support.
   c. Secure the sample/drain hose to MF Filtrate Sample/Drain Valve V-204.
   d. Wrap antiseizing tape onto the threads of Pressure Transmitter PT-102 and thread the transmitter into its fitting on the horizontal pipe section.
   e. Connect the air tubing to the actuators for Valve V-201 and V-202 in accordance to the tags.
8. Make all connections to the bottom and front of the RO feed tank as follows (see Figure 2):
   a. Wrap antiseizing tape on the threads of the tee coupling for the HP pump cooling water return tubes and thread the coupling into the tank fitting.
   b. Connect the HP pump cooling water return tubes to the tee.
   c. Wrap antiseizing tape on the threads of Level Transmitter LT-201 and thread the transmitter into the elbow on the tank. Connect the cable to the transmitter.
   d. Apply soapy water to the RO feed pump suction pipe and slide half of the hose over the pipe.
   e. Slide the 4 hose clamps over the hose.
   f. Apply soapy water to the RO feed tank outlet pipe and slide the other end of the hose over the outlet pipe.
   g. Secure the RO feed pump suction pipe to the inlet flange of the RO feed pump using the four cap screws, washers, and nuts that were removed earlier.
   h. Position and tighten the 4 hose clamps to secure the hose to the suction pipe and the RO feed tank outlet pipe.
   i. Apply soapy water to the cleaning return pipe and the cleaning return inlet on the tank. Slide the 2 hose clamps and hose over the ends of both.
   j. Secure the cleaning return pipe to the cleaning return inlet using the hose clamps.
   k. Apply soapy water to the re-circulation pipe and the re-circulation inlet on the RO feed tank and slide the 3 hose clamps and hose over the ends of both.
   l. Secure the re-circulation pipe to the re-circulation inlet adapter using the hose clamps.
   m. Wrap antiseizing tape on the threads of RO Feed Tank Auxiliary Drain Valve V-210 and thread the drain valve into its fitting under the left end of the RO feed tank.
9. (Army only) Install the TWPS skid onto the flat rack. Refer to WP 0032.

RO Vessel Replacement:

Parts:
RO Vessel Shell (TM 10-4610-309-23P)
Materials:
Abrasive cloth (WP 0038, Table 1, item 14)
Mild soap solution
Glycerin (WP 0038, Table 1, item 24)
Clean water
Corrosion preventive compound (WP 0038, Table 1, item 19)
Antiseizing tape (WP 0038, Table 1, item 49, 50)
Tools:
Small wire brush
Element pusher (TM 10-4610-309-23P)
Equipment Condition:
TWPS in Short Term Shutdown with Drain Down (WP 0015, TM 10-4610-309-10)

WARNING

High pressure. During operation the RO vessels and RO system may be pressurized up to 1200 psig. Make sure that the RO system pressure has been relieved prior to working on any part of the system. Failure to observe this warning can result in an explosive release of parts that can cause injury or death to personnel and damage to equipment.

Potential for catastrophic failure. Damage or scratches to the shell of an RO vessel that are deeper than the paint can result in failure of the vessel wall during operation. Vessel shells with such damage must be replaced. Failure to observe this warning can result in catastrophic failure of the vessel during operation and serious injury or death.

Replace the shell of an RO vessel while keeping all other parts of the RO vessel as follows:

1. Make sure that the RO system is in Short Term Shutdown with Drain Down. Refer to WP 0015, TM 10-4610-309-10.
2. Remove the RO elements from the RO vessels. Refer to WP 0039, TM 10-4610-309-10.
3. Remove the MF assembly. Refer to WP 0030.

WARNING

The RO vessels are heavy. Use an appropriate lifting device to lift and remove the vessels. Failure to observe this warning may result in back injury.

NOTE

RO vessel #1 cannot be removed unless RO vessel #2 is removed first. RO vessels 2, 3, 4, and 5 can be removed without having to remove any of the other vessels.

4. Remove RO vessel #2, 3, 4, or 5 as follows (see Figure 9):
    a. Remove the 2 nuts, 2 flat washers, 2 J-bolts, U-clamp, and pad at both ends of the vessel.
    b. Using an appropriate lifting device, lift the vessel slightly and maneuver it out the high pressure pump end of the TWPS.
    c. Remove the 2 mounting blocks on which the vessel rested.
5. Remove RO vessel #1 (the top RO vessel) as follows (see Figure 9):
    a. Remove RO vessel #2 if not already removed.
    b. Using an appropriate lifting device, support RO vessel #2.
    c. Remove the 2 nuts, 2 flat washers, 2 J-bolts, U-clamp, and pad at both ends of the vessel.
    d. Remove the 2 cap screws, 1 lock washer, three flat washers, and removable support beam under the vessel at both ends of the vessel.
    e. Lower the vessel and maneuver it out the high-pressure pump end of the TWPS.

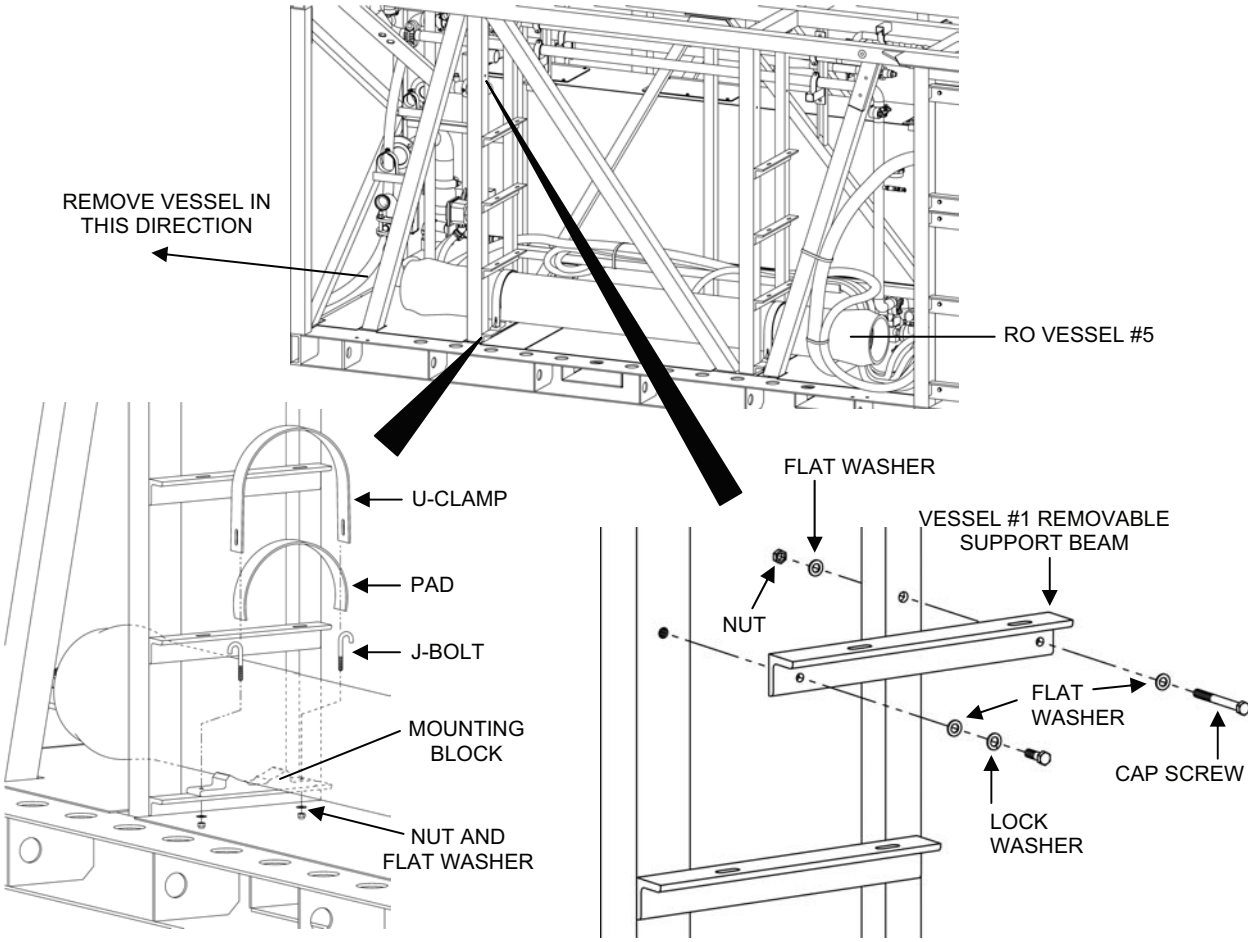

Figure 9. RO Vessel Replacement.

NOTE
RO vessel #1 cannot be installed unless RO vessel #2 is removed from the system.

6. Install new RO vessel #1 as follows (see Figure 9):
   a. Using an appropriate lifting device, lift the vessel and maneuver it into position in the TWPS frame. Raise the vessel high enough so that the removable support beams can be installed under the vessel.
   b. Install the removable support beam under the vessel at both ends of the vessel using the lock washer, flat washers, and cap screws removed earlier.
   c. Position the mounting blocks on the support beams and lower the vessel onto the blocks. Maintain support of the vessel with the lifting device.

NOTE
The RO vessels must be positioned precisely so that all connecting pipes match properly when assembled to the vessels.

   d. Position the RO vessel as follows:
      1) The end of the vessel nearest the electrical system panel box must be 14¼ in. from the outside edge of the vertical beam next to the panel box (see Figure 10).
      2) The back side of the vessel must be ¾ in. from the back vertical RO vessel support beam at both ends of the vessel (see Figure 10).

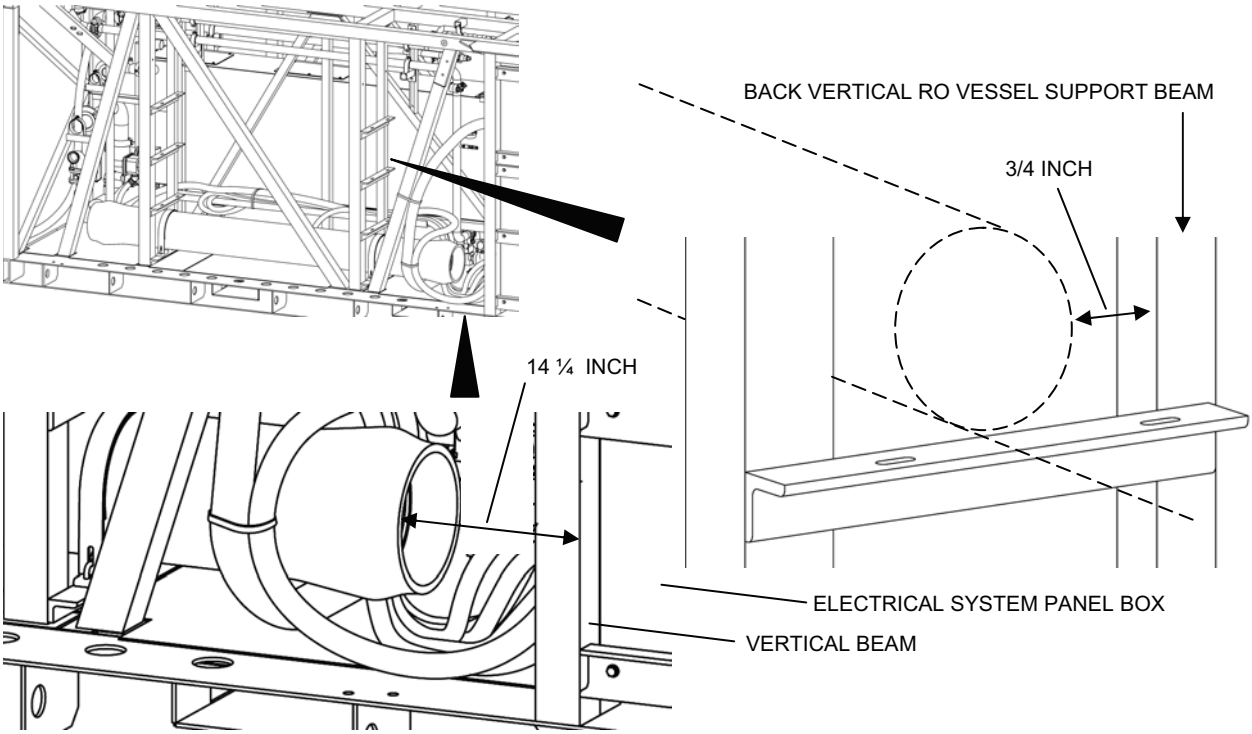

Figure 10. RO Vessel Positioning Dimensions.

e. Install the pad, U-clamp, 2 J-bolts, 2 flat washers, and 2 nuts at both ends of the vessel and tighten hand tight.
f. Remove the lifting device and, using a wrench, turn the nuts **one** additional full turn.

7. Install new RO vessel #5, 4, 3, or 2 as follows (see Figure 9):

NOTE

RO vessels 2, 3, 4, and 5 can be installed in any order, although it is generally easier to install the RO vessels from the bottom up when more than one vessel is to be installed.

a. Using an appropriate lifting device, lift the vessel and maneuver it into position in the TWPS frame.
b. Position the mounting blocks on the support beams and lower the vessel onto the blocks. Maintain support of the vessel with the lifting device.

NOTE

The RO vessels must be positioned precisely so that all connecting pipes match properly when assembled to the vessels.

c. Position the RO vessel as follows:
   1) The end of the vessel nearest the electrical system panel box must be 14¼ in. from the outside edge of the vertical beam next to the panel box (see Figure 10).
   2) The back side of the vessel must be ¾ in. from the back vertical RO vessel support beam at both ends of the vessel (see Figure 10).
d. Install the pad, U-clamp, 2 J-bolts, 2 flat washers, and 2 nuts at both ends of the vessel and tighten hand tight.
e. Remove the lifting device and, using a wrench, turn the nuts **one** additional full turn.

8. Install the RO elements in the new vessel. Refer to WP 0039, TM 10-4610-309-10.
9. Reinstall the MF Assembly. Refer to WP 0030.

END OF WORK PACKAGE

TACTICAL WATER PURIFICATION SYSTEM (TWPS) FIELD MAINTENANCE PROCEDURES TACTICAL WATER PURIFICATION SYSTEM (TWPS) SKID, FLAT RACK, AND TACTICAL QUIET GENERATOR (TQG)

0032 00

THIS SECTION COVERS:
Remove, Install, Replace, Repair

INITIAL SETUP:

Maintenance Level
Field
References
TM 9-6115-672-14 – Tactical Quiet Generator
TM 9-237 Welding Theory and Application
TM 43-0139 Painting Instructions
Personnel Required
Two
Equipment Condition
TWPS in extended shutdown

GENERAL:

The procedures covered in this work package include:

- TWPS Removal from and Installation into the Flat Rack (A-TWPS Only)
- TQG Replacement (A-TWPS Only)
- Frame, Tie-Down, and Lift Provision Repair

REMOVE AND INSTALL

TWPS Removal from and Installation into the Flat Rack (A-TWPS Only):

Parts:
Horseshoe shim (TM 10-4610-309-23P)
Materials:
Sealing Compound PR-1440 B-2 (WP 0038, Table 1, item 42)
Equipment Condition:
TWPS in Extended Shutdown (WP 0016, TM 10-4610-309-10)

Remove and reinstall the A-TWPS unit from and into the flat rack as follows:

NOTE

The A-TWPS flat rack and TWPS unit are serialized together as a unit. The TWPS unit would not typically be removed from the flat rack and replaced with another TWPS unit.

1. Remove the TWPS Unit from the flat rack as follows (see Figure 1):
   a. Remove the side and back panels from the flat rack.
   b. Remove the channel seals from the flat rack framing at the back of the flat rack only.
   c. Remove the two vertical flat rack braces from the back of the flat rack (3 bolts, 3 lock washers, and 3 washers at the top and bottom of both braces).
   d. Remove the three angle bars from the floor at the back of the flat rack (5 bolts, 5 lock washers, and 5 flat washers for each of the three bars).
   e. Remove the through-bolts, washers, and nuts that secure the TWPS unit to the floor of the flat rack (3 bolts, 6 flat washers, 3 lock washers, and 3 nuts at the front; 4 bolts, 8 flat washers, 4 lock washers, and 4 nuts at the back; and 2 bolts, 2 flat washers, 2 beveled washers, 2 lock washers, and 2 nuts at both ends).
   f. Mark for location any horseshoe shims that may be installed between the TWPS and the floor of the flat rack.
   g. Remove the shims if possible, otherwise collect and retain the shims after the TWPS unit has been removed from the flat rack.

CAUTION

Potential damage to Micro-Filtration Assembly. Do not tip the TWPS unit back against the vertical supports of the forklift. The micro-filtration assembly is not designed to support the weight of the rest of the TWPS unit pushing against it. Failure to observe this caution will result in significant damage to the micro-filtration assembly.

   h. Using appropriate lifting equipment, lift and remove the TWPS unit out through the back of the flat rack.

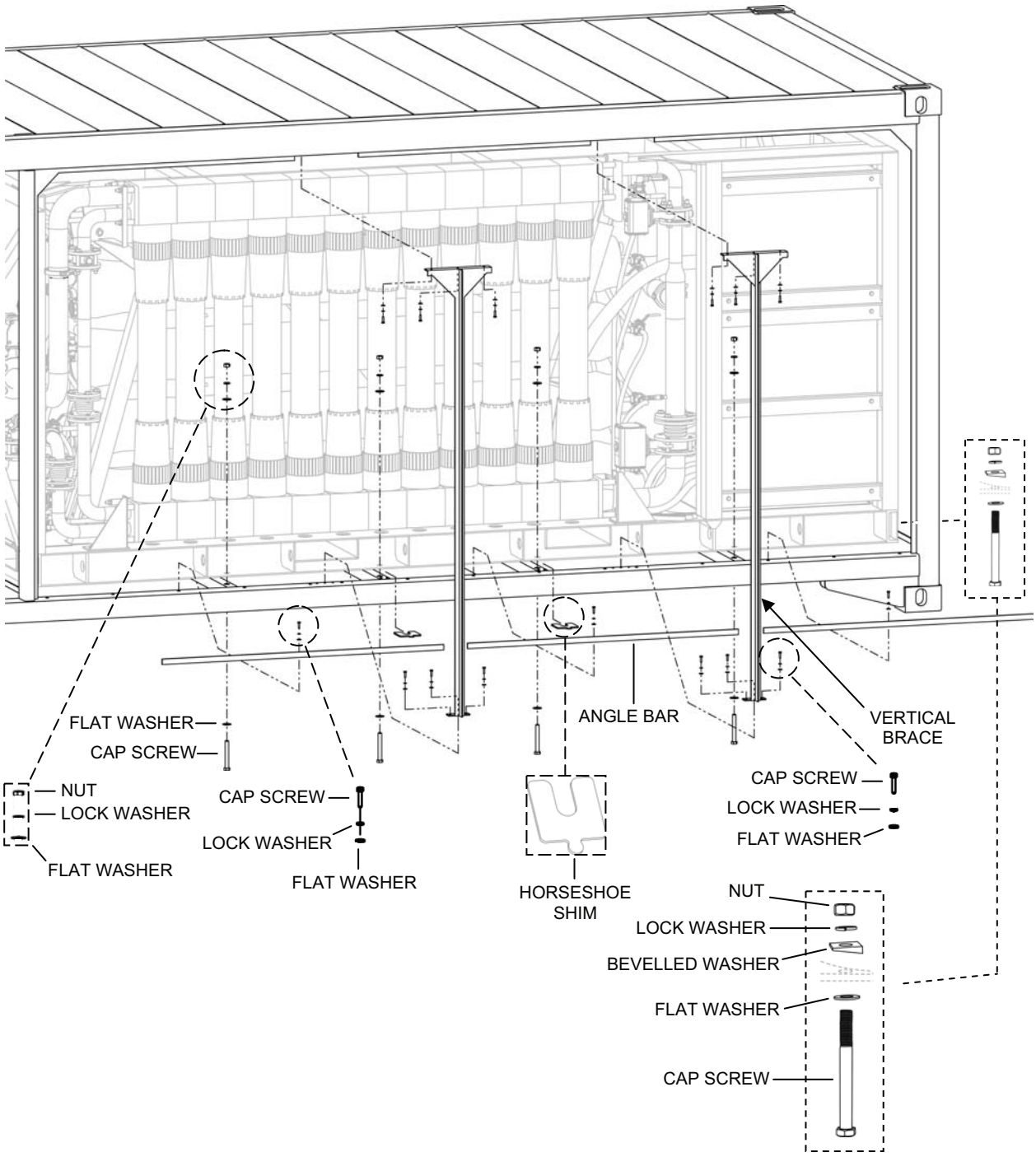

Figure 1. A-TWPS Removal from the Flat Rack.

2. Reinstall the TWPS Unit into the flat rack as follows (see Figure 1):

CAUTION

Potential damage to Micro-Filtration Assembly. Do not tip the TWPS unit back against the vertical supports of the forklift. The micro-filtration assembly is not designed to support the weight of the rest of the TWPS unit pushing against it. Failure to observe this caution will result in significant damage to the micro-filtration assembly.

a. Using appropriate lifting equipment, lift and carefully insert the TWPS unit, front first, into the back of the flat rack.
b. Make sure that the holes in the bottom framing of the TWPS unit align with the holes in the floor of the flat rack.
c. Reinsert the horseshoe shims in their same locations between the TWPS and flat rack floor or replace with same thickness shims if necessary.
d. Secure the TWPS unit to the floor of the flat rack using the through-bolts and nuts that were removed earlier. Insert the bolts up through the bottom of the flat rack (3 bolts, 6 flat washers, 3 lock washers, and 3 nuts at the front; 4 bolts, 8 flat washers, 4 lock washers, and 4 nuts at the back; and 2 bolts, 2 flat washers, 2 beveled washers, 2 lock washers, and 2 nuts at both ends).
e. Apply sealing compound to the TWPS frame where the bottom seal bars and vertical braces are to be installed.
f. Secure the two vertical flat rack braces to the back of the flat rack (3 bolts, 3 lock washers, and 3 flat washers at the top and bottom of both braces).
g. Secure the three angle bars to the floor at the back of the flat rack (5 bolts, 5 lock washers, and 5 flat washers for each of the three bars).
h. Reinstall the channel seals to the flat rack framing at the back of the flat rack.
i. Reinstall all of the panels on the flat rack.

TQG Replacement (A-TWPS Only):

Equipment Condition:
TWPS in Extended Shutdown (WP 0016, TM 10-4610-309-10)

Replace the A-TWPS TQG as follows:

1. Disconnect all power connections from the TQG as follows:

WARNING

High voltage electrical hazard. High voltage is produced when the generator set is in operation. Make sure that the Tactical Quiet Generator has been properly shut down before attempting to remove the ground from the TQG. Failure to observe this warning could result in injury or death from electrical shock.

NOTE
Refer to TM 9-6115-672-14 for generator operation.

a. Disconnect the TWPS power cable leads from the generator lugs labeled L1, L2, and L3.
b. Disconnect the TWPS power cable white lead from the generator neutral lug and the green lead from the generator ground lug.
c. Tuck the TWPS power cable end inside the TWPS frame.
d. Disconnect the ground cable from the generator ground lug.

2. Remove the TQG from the flat rack as follows (see Figure 2):
   a. Remove the hardware that secures the TQG to the floor of the flat rack (4 bolts, 8 flat washers, 4 lock washers, and 4 nuts).

NOTE
The TQG can be removed out through either the front or the back of the flat rack.

   b. Using appropriate lifting equipment, lift and remove the TQG off of the flat rack.

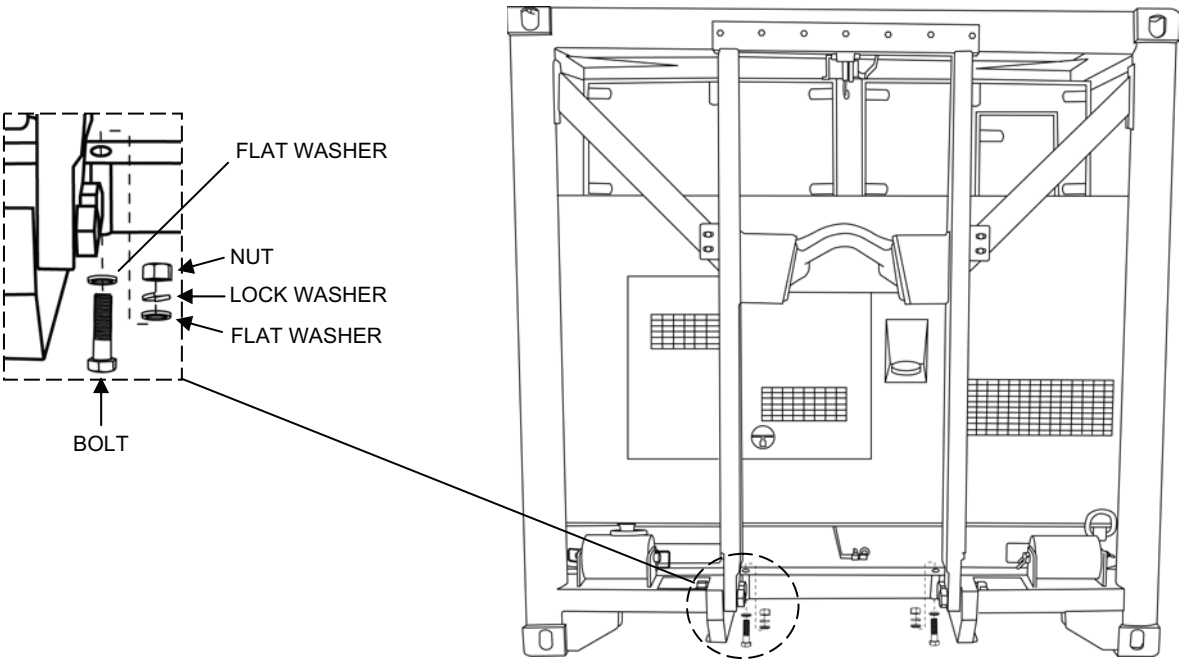

Figure 2. TQG Removal from the Flat Rack.

3. Install a TQG onto a flat rack as follows:

NOTE

When inserting a TQG onto the A-TWPS flat rack, make sure that the terminal compartment of the TQG is facing into the flat rack toward the TWPS unit.

   a. Using appropriate lifting equipment, lift and carefully insert the TQG onto the flat rack.
   b. Make sure that the holes in the bottom framing of the TQG align with the holes in the floor of the flat rack.
   c. Secure the TQG to the floor of the flat rack using the through-bolts and nuts that were removed earlier. Insert the bolts up through the bottom of the flat rack. (4 bolts, 8 flat washers, 4 lock washers, and 4 nuts).

Frame, Tie-Down, and Lift Provision Repair:

Equipment Condition:
TWPS in Extended Shutdown (WP 0016, TM 10-4610-309-10)

1. For repairs to the A-TWPS flat rack, remove the TPWS unit and TQG from the flat rack. Refer to **TWPS Removal from and Installation into the Flat Rack (A-TWPS Only)** and **TQG Replacement (A-TWPS Only)** in this work package.
2. For repairs to the TWPS frame, tie-down, or lift provisions perform the following:
   a. (A-TWPS only) Remove the TWPS unit from the flat rack. Refer to **TWPS Removal from and Installation into the Flat Rack (A-TWPS Only)**.
   b. Remove or protect components of the TWPS as necessary to perform required repairs.
3. For welding procedures, refer to TM 9-237 to weld damaged areas.
4. For painting of repaired areas, refer to TM 43-0139.

END OF WORK PACKAGE

TACTICAL WATER PURIFICATION SYSTEM (TWPS) **0033 00**
FIELD MAINTENANCE PROCEDURES
COLD WEATHER SYSTEM

THIS SECTION COVERS:
Repair

INITIAL SETUP:

Maintenance Level
Field
Tools
Sewing Equipment per FM 10-16, Fabric Repair
Materials/Parts:
Water Repellent Solution
Reference:
FM 10-16, Fabric Repair
Personnel Required
One
Equipment Condition
Hose heating blankets, adaptor heating blanket, pump covers, fabric wall, or winter cover taken out of service

GENERAL:
This procedure contains information and instructions for repairing surface damage to a hose cover, a pump cover, the fabric wall (A-TWPS), the general purpose cover (MC-TWPS), or the winter cover (MC-TWPS) in the Cold Weather System of the TWPS.

REPAIR

Hose Heating Blankets, Adaptor Heating Blanket, Pump Covers, Fabric Wall, or Winter Cover Repair:

The instructions that follow describe the steps for repairing surface damage to hose heating blankets, Adaptor heating blanket, pump covers, the fabric wall (A-TWPS), or the winter cover (MC-TWPS). (See Figure 1 through Figure 5)

1. Refer to FM 10-16 and sew patches on tears.
2. Refer to FM 10-16 and sew loose rim strip or webbing straps.
3. Refer to FM 10-16 and replace damaged or missing grommets and worn or frayed laces.
4. Refer to FM 10-16 and apply water repellant solution.

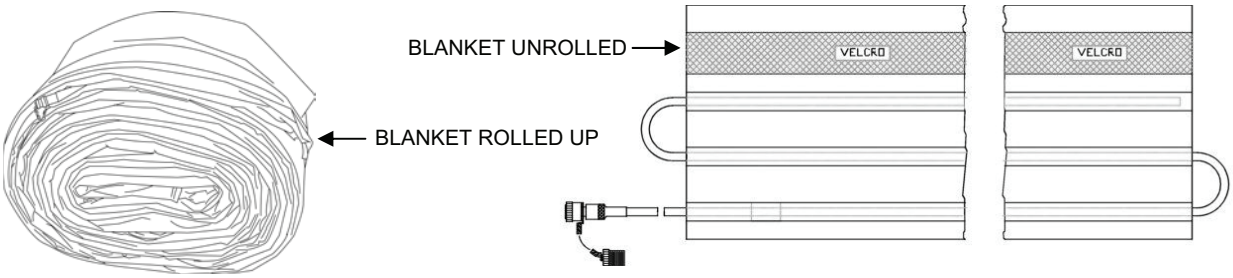

Figure 1. Hose Heating Blankets.

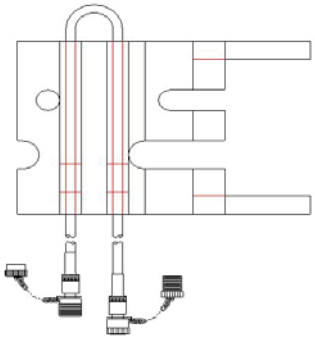

Figure 2. Adaptor A-02 Heating Blanket.

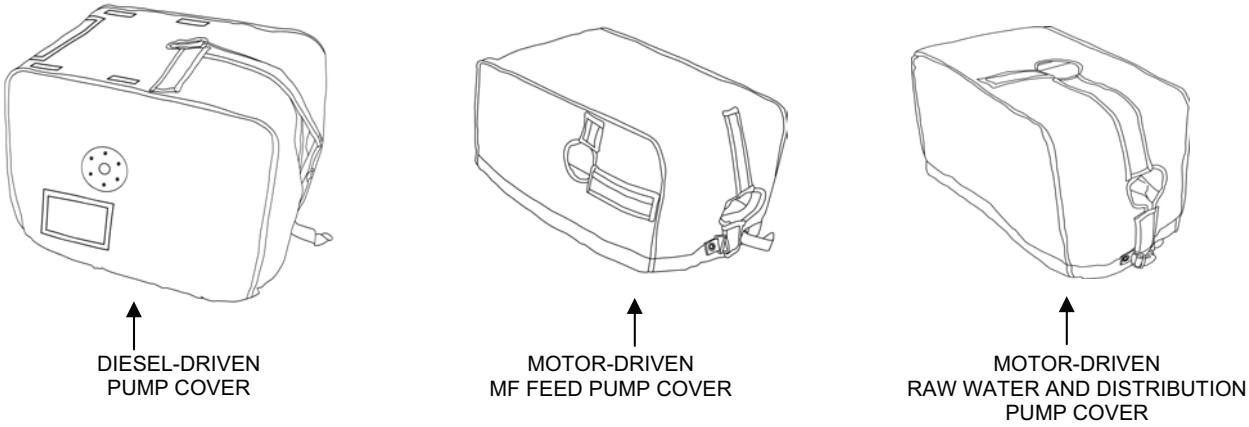

Figure 3. Pump Covers.

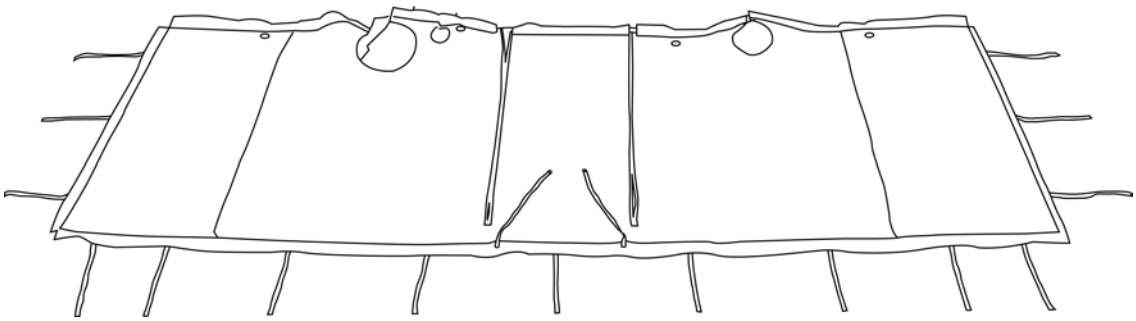

Figure 4. Fabric Wall (A-TWPS).

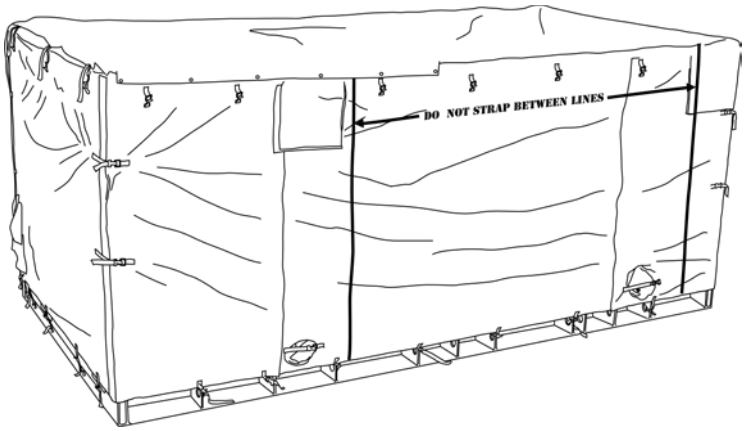

Figure 5. General Purpose Cover (MC-TWPS).

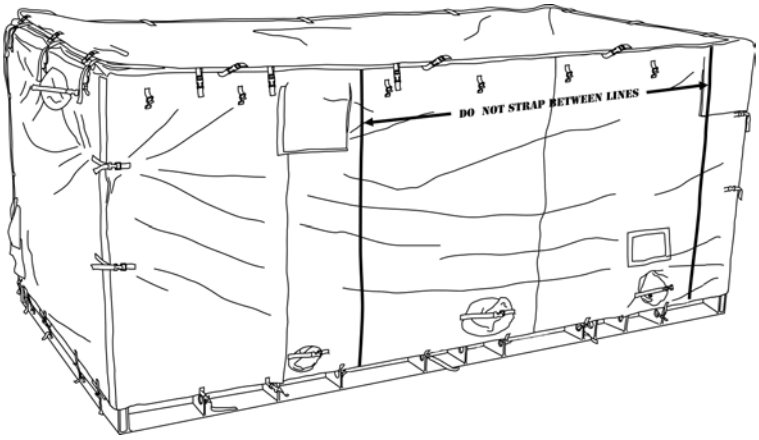

Figure 6. Winter Cover (MC-TWPS).

END OF WORK PACKAGE

TACTICAL WATER PURIFICATION SYSTEM (TWPS) **0034 00**
FIELD MAINTENANCE PROCEDURES
GENERAL FIELD MAINTENANCE PROCEDURES

THIS SECTION COVERS:
Replace

INITIAL SETUP:

Maintenance Level
Field
References
Refer to TM 10-4610-309-23P for repair parts information
Personnel Required
One
Equipment Condition
TWPS removed from service.

GENERAL:

The procedure covered in this work package includes:
- Cable connector replacement

Cable Connector Replacement:

Tools:
Multi-meter
Stripper, Wire
Heater, Air
Soldering Gun
Parts (TM 10-4610-309-23P):
Connector Assembly
Material:
Heat Shrink Tubing
Solder
Tape, Antiseizing (WP 0038, Table 1, item 49, 50)
Personnel Required:
One
Equipment Condition:
TWPS removed from service. Cable to be repaired, removed.

Replace a cable connector as follows (see Figure 1):

NOTE
Except where noted, this procedure applies to both straight and 90˚ connectors and is applicable regardless of the number of wires in the cable.

1. Cut the cable at the connector or before the point of damage if both the cable end and connector are damaged.
2. Disassemble the new connector.

3. Slide the new connector parts over the end of the cable in the following order:
   a. Strain relief, saddle and screws end first.
   b. Follower, flat edge first (beveled edge out).
   c. Grommet
   d. Back adapter, external threaded end first.
   e. Outer ground ring, thick edge first.
   f. Inner ground ring, smaller diameter end first.

NOTE

Elbow backshells are difficult to slide over stiff cables. Spraying WD-40 or a similar lubricant on the exterior of the cable will make it easier to slide the elbow backshell over the cable.

Make sure a gasket is in place over the male end and inside the female end of the backshell.

   g. Elbow (or straight) backshell, threaded end first.

NOTE

Make sure a gasket is in place inside the female end of the front adapter.

   h. Front adapter, external threaded end first.
   i. Dust cap ring.
   j. Coupling nut, end with narrow lip first.

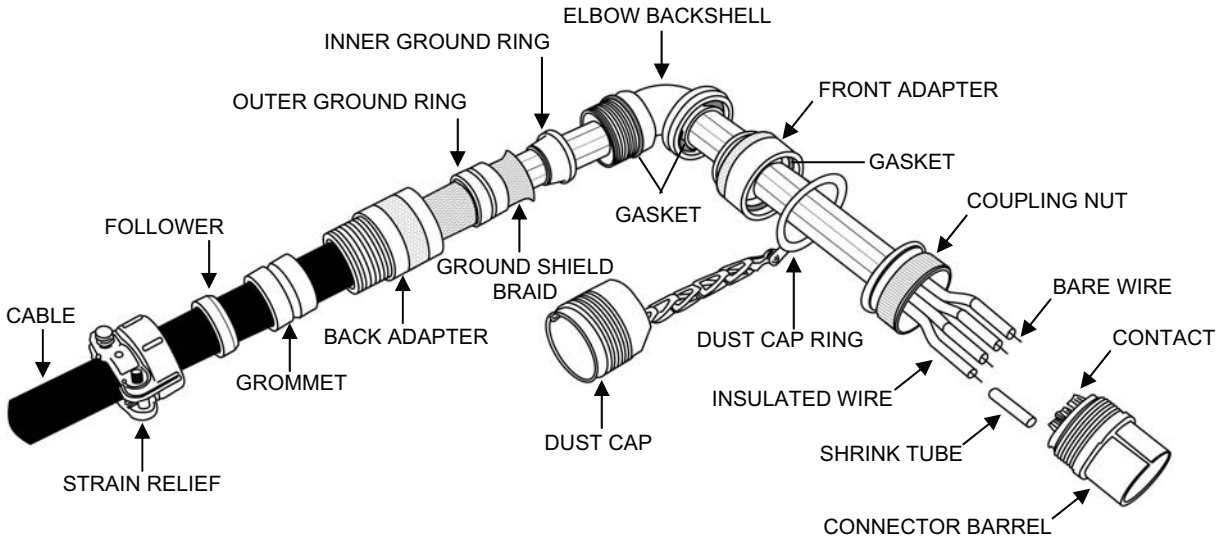

Figure 1. Cable Connector Replacement.

4. Prepare the cable for installation onto the new connector as follows:
   a. Temporarily assemble the backshell, front adapter, dust cap ring, coupling nut, and connector barrel with the cable end against the connector.
   b. Mark the outer sheathing of the cable about 1-inch down from the threaded end of the backshell.
   c. Remove the connector barrel and slide the rest of the parts down the cable past the mark made on the cable sheathing.

NOTE

Be careful not to cut the ground shield braid under the cable sheathing when stripping the sheathing off the cable.

   d. Strip the sheathing off the cable from the mark to the end of the cable.
   e. Leave about 1-inch of exposed ground shield braid from the end of the cable sheathing and cut the rest off.
   f. Strip about ½ inch of insulation off the ends of each of the individually insulated cable wires.
   g. Slide a 1-inch long shrink tube over each wire so that they clear the stripped portions of the wires.

NOTE

Contact numbers are marked on the flat end of the connector.

5. Install the cable to the new connector as follows:
   a. Disassemble the old connector and note the wire colors and the number of the contact to which each wire is connected.

CAUTION

Installation of wires into the wrong contacts will result in malfunctions of damage to equipment. Be sure the wires are installed into the correct contacts.

   b. Insert a stripped cable wire into its respective contact on the new connector barrel and solder the wire in place. Repeat this step for each of the wires in the cable.
   c. Brush the soldered connections with a small brush.
   d. Spray the connection with a degreaser.
   e. Blow the connections dry with air.
   f. Using a multimeter or comparable device, check across each of the terminals to ensure that there is no current flow between contacts.
   g. Slide the shrink tubes over each of the soldered connections.
   h. Using a heat gun, shrink the shrink tubes onto the connections.
6. Assemble the new connector as follows:
   a. Slip the coupling nut over the threads of the connector barrel.
   b. Slip the dust cap ring over the threads of the connector barrel.
   c. Apply antiseizing tape to the threads of the connector barrel and thread the connector into the front adapter.

NOTE

(For an elbow backshell) When threading the backshell onto the front adapter, hold the connector so that the connector barrel key is positioned at the top of the backshell. The bottom of the backshell is the threaded end of the backshell. The top of the backshell is opposite the bottom. Make sure the barrel key stays at the top until the backshell is threaded completely onto the front adapter.

d. Apply antiseizing tape to the threads of the front adapter and thread the backshell onto the front adapter.
e. Slide the inner ground ring into the threaded end of the backshell.
f. Slide the shield braid over the tapered end of the inner ground ring until it reaches all the way up to the wide end of the taper.
g. Slide the outer ground ring over the inner ground ring.
h. Apply antiseizing tape to the threads of the backshell.
i. Slide the back adapter over both ground rings and thread the adapter onto the backshell.

NOTE

When sliding the grommet into the back adapter, make sure that the cable sheathing passes through the grommet. If it does not, and the exposed shield braid extends back into the grommet, the connection must be taken apart and remade.

j. Slide the grommet into the threaded end of the back adapter.
k. Slide the follower onto the rear of the grommet.
l. Apply antiseizing tape to the threads of the back adapter and thread the strain relief onto the adapter.
m. Tighten the screws on the saddles of the strain relief securely onto the cable.

END OF WORK PACKAGE

CHAPTER 4

SUPPORTING INFORMATION

FOR

TACTICAL WATER PURIFICATION SYSTEM (TWPS)

TACTICAL WATER PURIFICATION SYSTEM (TWPS) SUPPORTING INFORMATION REFERENCES

0035 00

SCOPE

This work package lists field manuals, forms, technical manuals, and miscellaneous publications that are referenced in this manual or are otherwise applicable to the operation and maintenance of the Tactical Water Purification System (TWPS).

FIELD MANUALS

Chemical and Biological Contamination Avoidance ..... FM 3-3
Nuclear Contamination Avoidance ..... FM 3-3-1
NBC Protection ..... FM 3-4
NBC Decontamination ..... FM 3-5
General Fabric Repair ..... FM 10-16
Water Supply in Theaters of Operations ..... FM 10-52
Water Supply Point Equipment and Operations ..... FM 10-52-1
First Aid for Soldiers ..... FM 21-11
Basic Cold Weather Manual ..... FM 31-70

FORMS

Equipment Inspection and Maintenance Worksheet ..... DA 2404
Equipment Control Record ..... DA 2408-9
Hand Receipt/Annex Number ..... DA 2062
Recommended Changes to Publications and Blank Forms ..... DA 2028
Transportation Discrepancy Report ..... SF 361
Product Quality Deficiency Report ..... SF 368

TECHNICAL MANUALS

Procedures for the Destruction of Army Equipment to Prevent Enemy Use (Mobility Equipment Command) ..... TM 750-244-3
Administrative Storage of Equipment ..... TM 740-90-1
Preservation, Packaging, and Packing of Military Supplies and Equipment ..... TM 38-230-2
Painting Instructions for Army Materiel ..... TM 43-0139
Welding Theory and Application ..... TM 9-237
Operator, Unit, Direct Support, and General Support Maintenance Manual for Generator Set, Skid Mounted, Tactical Quiet, 60 kW, 50/60 Hz ..... TM 9-6115-672-14

Unit, Direct Support and General Support Maintenance Repair Parts and Special Tools List for Generator, Skid Mounted, Tactical Quiet, 60 KW, 50/60 Hz ..... TM 9-6115-672-24P
Operator and Unit Maintenance Manual (Including Repair Parts & Special Tools List) for Water Quality Analysis Set: Purification (WQAS-P) ..... TM 10-6630-222-12&P
Operator's and Unit Maintenance Manual (Including Repair Parts & Special Tools List) for Tank, Fabric, Collapsible, Water Storage, 3,000 Gallons ..... TM 10-5430-237-12&P
Repair Parts and Special Tools List for Tactical Water Purification System ..... TM 10-4610-309-23P

MISCELLANEOUS

The Army Maintenance Management System (TAMMS) ..... DA PAM 738-750
Sanitary Control and Surveillance of Field Water Supplies ..... TB MED 577
Expendable/Durable Items (Except Medical, Class V Repair Parts, and Heraldic Items) ..... CTA 50-970

END OF WORK PACKAGE

TACTICAL WATER PURIFICATION SYSTEM (TWPS) FIELD MAINTENACE MAINTENANCE ALLOCATION CHART (MAC) INTRODUCTION

0036 00

INTRODUCTION

This Work Package provides the Maintenance Allocation Chart (MAC) for the TWPS, excluding the Government-furnished equipment (GFE). Refer to TM 9-6115-672-14 (Marine Corps TM 09244A/09245A-14) for the MAC and other maintenance information for the Tactical Quiet Generator (TQG). Refer to TM 10-6630-222-12&P for the MAC and other maintenance information for the Water Quality Analysis Set: Purification (WQAS-P) (Army only).

The Army Maintenance System MAC

This introduction provides a general explanation of all maintenance and repair functions authorized at two maintenance levels under the Two-Level Maintenance System concept.

The MAC (immediately following this introduction) designates overall authority and responsibility for the performance of maintenance functions on the identified end item or component. The application of the maintenance functions to the end item or component shall be consistent with the capacities and capabilities of the designated maintenance levels, which are shown on the MAC in column (4) as:

Field – includes three sub columns, Crew (C), Service (O) and Field maintenance (F).
Sustainment – includes two sub columns, Below Depot (H) and Depot (D).

The tools and test equipment requirements (immediately following the MAC) list the tools and test equipment (both special tools and common tool sets) required for each maintenance function as referenced from the MAC.

The remarks (immediately following the tools and test equipment requirements) contain supplemental instructions and explanatory notes for a particular maintenance function.

Maintenance Functions

Maintenance functions are limited to and defined as follows:

1. Inspect. To determine the serviceability of an item by comparing its physical, mechanical, and/or electrical characteristics with established standards through examination (e.g., by sight, sound, or feel). This includes scheduled inspection and gagings and evaluation of cannon tubes.

2. Test. To verify serviceability by measuring the mechanical, pneumatic, hydraulic, or electrical characteristics of an item and comparing those characteristics with prescribed standards on a scheduled basis, i.e., load testing of lift devices and hydrostatic testing of pressure hoses.

3. Service. Operations required periodically to keep an item in proper operating condition; e.g., to clean (includes decontaminate, when required), to preserve, to drain, to paint, or to replenish fuel, lubricants, chemical fluids, or gases. This includes scheduled exercising and purging of recoil mechanisms. The following are examples of service functions:
   a. Unpack. To remove from packing box for service or when required for the performance of maintenance operations.
   b. Repack. To return item to packing box after service and other maintenance operations.
   c. Clean. To rid the item of contamination.
   d. Touch up. To spot paint scratched or blistered surfaces.
   e. Mark. To restore obliterated identification.

4. Adjust. To maintain or regulate, within prescribed limits, by bringing into proper position, or by setting the operating characteristics to specified parameters.

5. Align. To adjust specified variable elements of an item to bring about optimum or desired performance.

6. Calibrate. To determine and cause corrections to be made or to be adjusted on instruments of test, measuring, and diagnostic equipment used in precision measurement. Consists of comparisons of two instruments, one of which is a certified standard of known accuracy, to detect and adjust any discrepancy in the accuracy of the instrument being compared.

7. Remove/Install. To remove and install the same item when required to perform service or other maintenance functions. Install may be the act of emplacing, seating, or fixing into position a spare, repair part, or module (component or assembly) in a manner to allow the proper functioning of an equipment or system.

8. Paint (ammunition only). To prepare and spray color coats of paint so that the ammunition can be identified and protected. The color indicating primary use is applied, preferably, to the entire exterior surface as the background color of the item. Other markings are to be repainted as orginal so as to retain proper ammunition identification.

9. Replace. To remove an unserviceable item and install a serviceable counterpart in its place. “Replace” is authorized by the MAC and assigned maintenance level is shown as the third position code of the Source, Maintenance and Recoverability (SMR) code.

10. Repair. The application of maintenance services, including fault location/troubleshooting, removal/ installation, disassembly/ assembly procedures, and maintenance actions to identify troubles and restore serviceability to an item by correcting specific damage, fault, malfunction, or failure in a part, subassembly, module (component or assembly), end item, or system.

NOTE

The following definitions are applicable to the “repair” maintenance function:
Services. Inspect, test, service, adjust, align, calibrate, and/or replace.

Fault location/troubleshooting. The process of investigating and detecting the Cause of equipment malfunctioning; the act of isolating a fault within a system Or Unit Under Test (UUT).

Disassembly/assembly. The step-by-step breakdown (taking apart) of a spare/ functional group coded item to the level of its least component, that is assigned an SMR code for the level of maintenance under consideration (i.e., identified as maintenance significant).

Actions. Welding, grinding, riveting, straightening, facing, machining, and/or resurfacing.

11. Overhaul. That maintenance effort (service/action) prescribed to restore an item to a completely serviceable/operational condition as required by maintenance standards in appropriate technical publications. Overhaul is normally the highest degree of maintenance performed by the Army. Overhaul does not normally return an item to like new condition.

12. Rebuild. Consists of those services/actions necessary for the restoration of unserviceable equipment to a like new condition in accordance with original manufacturing standards. Rebuild is the highest degree of materiel maintenance applied to Army equipment. The rebuild operation includes the act of returning to zero those age measurements (e.g., hours/miles) considered in classifying Army equipment/components.

Explanation of Enties in the MAC

Column (1) Group Number. Column (1) lists Functional Group Code (FGC) numbers, the purpose of which is to identify maintenance significant components, assemblies, subassemblies, and modules with the Next Higher Assembly (NHA).

Column (2) Component/Assembly. Column (2) contains the item names of components, assemblies, subassemblies, and modules for which maintenance is authorized.

Column (3) Maintenance Function. Column (3) lists the functions to be performed on the item listed in column (2). (For a detailed explanation of these functions refer to “Maintenance Functions” outlined above).

Column (4) Maintenance Level. Column (4) specifies each level of maintenance authorized to perform each function listed in column (3), by indicating work time required (expressed as manhours in whole hours or decimals) in the appropriate subcolumn. This work time figure represents the active time required to perform that maintenance function at the indicated level of maintenance. If the number or complexity of the tasks within the listed maintenance function varies at different maintenance levels, appropriate work time figures are to be shown for each level. The work time figure represents the average time required to restore an item (assembly, subassembly, component, module, end item, or system) to a serviceable condition under typical field operating conditions. This time includes preparation time (including any necessary disassembly/assembly time), troubleshooting/fault location time, and quality assurance time in addition to the time required to perform the specific tasks identified for the maintenance functions authorized in the MAC. The symbol designations for the various maintenance levels are as follows:

Field:

C Operator or crew maintenance

O Service maintenance

F – Field maintenance

Sustainment:

L Specialized repair activity

H Below Depot maintenance

D Depot maintenance

NOTE

The “L” maintenance level is not included in column (4) of the MAC. Functions to this level are identified by a work time figure in the “H” column of column (4), and an associated reference code is used in the REMARKS column (6). This code is keyed to the remarks and the SRA complete repair application is explained there.

Column (5) Tools and Equipment Reference Code. Column (5) specifies, by code, those common tool sets (not individual tools), common Test, Measurement and Diagnostic Equipment (TMDE), and special tools, special TMDE and special support equipment required to perform the designated function. Codes are keyed to the entries in the tools and test equipment table.

Column (6) Remarks Code. When applicable, this column contains a letter code, in alphabetical order, which is keyed to the remarks table entries.

Explanation of Columns in the Tools and Test Equipment Requirements

Column (1) Tool or Test Equipment Reference Code. The tool or test equipment reference code correlates with a code used in column (5) of the MAC.

Column (2) Maintenance Level. The lowest level of maintenance authorized to use the tool or test equipment.

Column (3) Nomenclature. Name or identification of the tool or test equipment.

Column (4) National Stock Number (NSN). The NSN of the tool or test equipment.

Column (5) Tool Number. The manufacturer's part number, model number, or type number.

Explanation of Columns in the Remarks

Column (1) Remarks Code. The code recorded in column (6) of the MAC.

Column (2) Remarks. This column lists information pertinent to the maintenance function being performed as indicated in the MAC.

END OF WORK PACKAGE

Table 1. MAC for TWPS.

(1) GROUP NUMBER	(2) COMPONENT/ ASSEMBLY	(3) MAINTENANCE FUNCTION	(4) MAINTENANCE LEVEL					(5) TOOLS AND EQUIPMENT REF CODE	(6) REMARKS CODE
			FIELD			SUSTAINMENT			
			CREW	SERVICE	FIELD	BELOW DEPOT	DEPOT		
			C	O	F	H	D		
00	TWPS								
01	RAW WATER SUBSYSTEM	Inspect	0.5						A
0101	Anchor Assembly	Inspect	0.1						
		Repair		0.3				2, 3	B
0102	Floating Inlet Strainer S1	Inspect	0.1						
		Repair		0.1				1	C
0103	Hose Assemblies and Adaptors	Inspect	0.3						
		Repair	0.1	0.3				1, 2, 3	C, Q
0104	Diesel-driven Pump Assembly P1	Inspect	0.1	0.2					
		Repair		1.0				2, 3	B, G
010401	Diesel Engine	Inspect	0.1	0.2	1.0				
		Service	0.1	0.5				1, 2, 3	D,N
		Repair		0.5	5.0			2, 3	B, G
		Replace		1.0				2, 3	
010402	Pump	Inspect	0.1	0.1					
		Repair		1.0				2, 3	E
		Replace		0.5				2, 3	
010403	Skid Frame	Inspect	0.1	0.1					
		Repair			1.0			4	F
		Replace		1.0				2, 3	
010404	Junction Box	Inspect	0.1	0.1					
		Repair		0.5				2, 3	B, G
		Replace		0.5				2, 3	
0105	Motor-driven Pump Assembly P-2	Inspect	0.1	0.2					
		Repair		0.5				2, 3	B, G
010501	Pump	Inspect	0.1	0.1					
		Repair		1.0				2, 3	E
		Replace		0.5				2, 3	
010502	Electric Motor	Inspect	0.1	0.1					
		Replace		1.0				2, 3	
010503	Motor Pigtail	Inspect	0.1	0.1					
		Replace		0.5				2, 3	
010504	Skid Frame	Inspect	0.1	0.1					
		Repair			1.0			4	
		Replace		1.0				2, 3	
010505	Junction Box	Inspect	0.1						
		Repair		0.5				2, 3	B, G
		Replace		0.5					
02	PRODUCT WATER DISTRIBUTION SUBSYSTEM	Inspect	0.3						A

TACTICAL WATER PURIFICATION SYSTEM (TWPS) FIELD MAINTENACE MAINTENANCE ALLOCATION CHART (MAC) TABLES

0037 00

(1) GROUP NUMBER	(2) COMPONENT/ ASSEMBLY	(3) MAINTENANCE FUNCTION	(4) MAINTENANCE LEVEL					(5) TOOLS AND EQUIPMENT REF CODE	(6) REMARKS CODE
			FIELD			SUSTAINMENT			
			CREW	SERVICE	FIELD	BELOW DEPOT	DEPOT		
			C	O	F	H	D		
0201	Storage Tanks T-3 and T-4	Inspect	0.1	0.5					
		Repair		0.5					H
0202	Hose Assemblies and Adaptors	Inspect	0.3						
		Repair	0.1					1	C
0203	Motor-driven Pump Assembly P7	Inspect	0.1	0.2					
		Repair		1.0				2, 3	B, G
020301	Pump	Inspect	0.1	0.1					
		Repair		1.0				2, 3	E
		Replace		0.5				2, 3	
020302	Electric Motor	Inspect	0.1	0.1					
		Replace		1.0				2, 3	
020303	Motor Pigtail	Inspect	0.1	0.1					
		Replace		0.5				2, 3	
020304	Skid Frame	Inspect	0.1	0.1					
		Repair			1.0			4	F
		Replace		1.0				2, 3	
020305	Junction Box	Inspect	0.1	0.1					
		Repair		0.5				2, 3	G
		Replace		0.5					
03	MICRO-FILTRATION SUBSYSTEM	Inspect	0.6						A
0301	Feed Tank T1	Inspect	0.1	0.2					
		Repair		0.5					H
0302	Feed Pump Assembly P3	Inspect	0.1	0.1					
		Repair		1.0				2, 3	B, G
030201	Pump	Inspect	0.1	0.1					
		Repair		1.0				2, 3	E
		Replace		0.5				2, 3	
030202	Electric Motor	Inspect	0.1	0.1					
		Replace		1.0				2, 3	
030203	Motor Pigtail	Inspect	0.1	0.1					
		Replace		0.5				2, 3	
030204	Skid Frame	Inspect	0.1	0.1					
		Repair			1.0			4	F
		Replace		1.0					
030205	Junction Box	Inspect	0.1	0.1					
		Repair		0.5				2, 3	B, G
		Replace		0.5					
0303	Micro-filtration Modules	Inspect	0.1						
		Repair	0.5	0.5				8	R
		Replace			2.0				
0304	Piping, Valves, and Instrumentation	Inspect	0.1	0.5					
		Repair		1.0				2, 3	B, G
		Replace		1.0				2, 3	

TACTICAL WATER PURIFICATION SYSTEM (TWPS) FIELD MAINTENACE MAINTENANCE ALLOCATION CHART (MAC) TABLES

(1) GROUP NUMBER	(2) COMPONENT/ ASSEMBLY	(3) MAINTENANCE FUNCTION	(4) MAINTENANCE LEVEL					(5) TOOLS AND EQUIPMENT REF CODE	(6) REMARKS CODE
			FIELD			SUSTAINMENT			
			CREW	SERVICE	FIELD	BELOW DEPOT	DEPOT		
			C	O	F	H	D		
0305	Hose Assemblies and Adaptors	Inspect	0.2						A
		Repair	0.1					1	C
04	REVERSE OSMOSIS SUBSYSTEM	Inspect	0.5						A
0401	Feed Tank Assembly	Inspect	0.1	0.2					
		Repair		0.5				2, 3	B, G
		Replace			4.0			2, 3	
0402	Feed Pump Assembly P4	Inspect	0.1	0.2					
		Repair		1.0					B, G
		Replace		1.0					
040201	Pump	Inspect	0.1	0.1					
		Repair		1.0				2, 3	E
		Replace		1.0				2, 3	
040202	Electric Motor	Inspect	0.1	0.1					
		Replace		0.5				2, 3	
0403	High Pressure Pump Assembly P5, P6	Inspect	0.1	0.2					
		Repair		1.0				11, 12	
		Replace		1.0				11, 12	
040301	Pump	Inspect	0.1	0.1					
		Service		2.0				2, 3, 11, 12, 13	I
		Repair		2.0				2, 3	E
		Replace		1.0				2, 3	
040302	Electric Motor	Inspect	0.1	0.1					
		Replace		1.0				2, 3	
0404	Turbocharger Assembly PRT1	Inspect	0.1	0.1					
		Repair		1.0				2, 3	
		Replace		1.0				2, 3	
0405	RO Vessels ROV-1 through ROV-5	Inspect	0.2						
		Repair	1.0	1.0				1, 5	J
		Replace	1.0		2.0			1	
0406	Piping, Valves, and Instrumentation	Inspect	0.1	0.3					
		Replace		1.0				2, 3	B, G
05	CHEMICAL INJECTION SUBSYSTEM	Inspect	0.2						A
0501	Injection Pump CP1, CP2, CP3	Inspect	0.1	0.1					
		Repair		1.0				2, 3	B, G
		Replace		0.5				2, 3	
0502	Tubing Assemblies	Inspect	0.1						
		Repair	0.1					1	C
		Repair		0.5				2, 3	B, G
		Replace		0.5				2, 3	

TACTICAL WATER PURIFICATION SYSTEM (TWPS) FIELD MAINTENACE MAINTENANCE ALLOCATION CHART (MAC) TABLES

(1) GROUP NUMBER	(2) COMPONENT/ ASSEMBLY	(3) MAINTENANCE FUNCTION	(4) MAINTENANCE LEVEL					(5) TOOLS AND EQUIPMENT REF CODE	(6) REMARKS CODE
			FIELD			SUSTAINMENT			
			CREW	SERVICE	FIELD	BELOW DEPOT	DEPOT		
			C	O	F	H	D		
06	AIR SUBSYSTEM	Inspect	0.3						A
		Adjust	0.1					1	O
		Service	0.5					1	L
0601	Air Compressor AC1	Inspect	0.1	0.1					
		Adjust	0.3					1	P, K
		Service		0.5				2, 3	K
		Repair		1.0				2, 3, 6	B, G
		Replace		1.0				2, 3	
0602	Air Compressor Drive Motor	Inspect	0.1	0.1					
		Replace		0.5				2, 3	
0603	Valves and Instrumentation	Inspect	0.1	0.3					
		Replace		0.5				2, 3	
0604	Tubing and Hoses	Inspect	0.1	0.5					
		Replace		0.3				2, 3	
07	ELECTRICAL SUBSYSTEM	Inspect	0.2						A
0701	Operator Control Panel	Inspect	0.1	0.2					
		Repair		0.5				2, 3, 10	B, G
0702	Power Distribution Panel	Inspect	0.1	0.2					
		Repair		0.5				2, 3, 10	B, G
0703	Power Cables	Inspect	0.1	0.2					
		Repair		0.5				2, 3, 10	G
08	SKID	Inspect	0.5						A
		Inspect		0.5					
		Repair			3.0			4	F
09	NBC SUBSYSTEM	Inspect	0.2						A
0901	NBC Tank	Inspect	0.1						
		Replace		0.2					B
0902	Injection Assembly	Inspect	0.1						
		Replace	0.1						
10	NBC SURVIVABILITY	Inspect	0.2						
1001	Contamination Avoidance Cover	Inspect	0.2						
		Replace							
1002	Rope, NBC Cover	Inspect	0.1						
		Replace							

TACTICAL WATER PURIFICATION SYSTEM (TWPS) FIELD MAINTENACE MAINTENANCE ALLOCATION CHART (MAC) TABLES

(1) GROUP NUMBER	(2) COMPONENT/ ASSEMBLY	(3) MAINTENANCE FUNCTION	(4) MAINTENANCE LEVEL					(5) TOOLS AND EQUIPMENT REF CODE	(6) REMARKS CODE
			FIELD			SUSTAINMENT			
			CREW	SERVICE	FIELD	BELOW DEPOT	DEPOT		
			C	O	F	H	D		
11	COLD WEATHER SUBSYSTEM	Inspect	0.5						A
1101	Space Heater	Inspect Service Repair	0.1	0.2 0.5 1.0				2, 3, 9	B, G, S
1102	Ice Hole Strainer S2	Inspect Repair	0.1 0.1					1	
1103	Pump Covers	Inspect Repair	0.1		1.0			7	M
1104	Hose Heating Blankets	Inspect Repair	0.1		1.0			7	M
1105	Winter Cover (Marine Corps only)	Inspect Repair	1.0		1.0			7	M
1106	Fabric Wall (Marine Corps only)	Inspect Repair	0.1		1.0			7	M
1107	Transformer Assembly	Inspect Repair	0.1	0.1 0.3				2, 3	
12	CLEANING WASTE STORAGE SUBSYSTEM	Inspect	0.1						A
1201	Wastewater Tanks	Inspect Repair	0.1	0.1 0.5					H
1202	Assembly, Adaptor A16	Inspect Repair	0.1 0.1					1	C
13	OCEAN INTAKE STRUCTURE SYSTEM (OISS)	Inspect Inspect Repair	0.2 0.1	 0.3 0.5				 2, 3	A B, C
14	EXTENDED DISTRIBUTION SYSTEM	Inspect	0.3						
1401	Storage Tanks T-5 through T-7	Inspect Repair	0.1	0.5 0.5					H
1402	Hose Assemblies and Adaptors	Inspect Repair	0.3 0.1					1	C
1403	Diesel-driven Pump Assembly P8	Inspect Repair	0.1	0.2 1.0				2, 3	B, G

TACTICAL WATER PURIFICATION SYSTEM (TWPS) FIELD MAINTENACE MAINTENANCE ALLOCATION CHART (MAC) TABLES

(1) GROUP NUMBER	(2) COMPONENT/ ASSEMBLY	(3) MAINTENANCE FUNCTION	(4) MAINTENANCE LEVEL					(5) TOOLS AND EQUIPMENT REF CODE	(6) REMARKS CODE
			FIELD			SUSTAINMENT			
			CREW	SERVICE	FIELD	BELOW DEPOT	DEPOT		
			C	O	F	H	D		
140301	Diesel Engine	Inspect		0.2					
		Service	0.1	0.5				1, 2, 3	D, N
		Repair		1.0				2, 3	B, G
		Replace		1.0				2, 3	
140302	Pump	Inspect	0.1	0.1					
		Repair		1.0				2, 3	E
		Replace		0.5				2, 3	
140303	Skid Frame	Inspect	0.1	0.1					
		Repair			1.0			4	F
		Replace		1.0					
140304	Junction Box	Inspect	0.1	0.1					
		Replace		0.5				2, 3	B, G
15	FLAT RACK ASSEMBLY	Inspect	0.3						
1501	Frame Assembly and Panels	Inspect	0.1	0.2					
		Repair		0.3				2, 3	
1502	Support Stand Assembly	Inspect	0.1	0.1					
		Repair		0.3				2, 3	
1503	Fabric Wall	Inspect	0.1	0.2					
		Repair		0.3					
16	WASTE DISCHARGE SYSTEM	Inspect	0.3						
1601	Hose Assemblies and Adaptors	Inspect	0.3						
		Repair	0.1						C

Table 2. Tools and Test Equipment for TWPS.

TOOL OR TEST EQUIPMENT	MAINTENANCE LEVEL	NOMENCLATURE	NATIONAL STOCK NUMBER	TOOL NUMBER
1	C	Tool Kit, TWPS Operator's (BII)		33901161
2	O	Tool Kit, General Mechanic's, Automotive (Army)	5180-01-454-3787	SC 5180-95-B47
3	O	Tool Set, Common No. 1 (Marine Corps)	4910-01-238-8115	0213SL86
4	F	Shop Equipment, Welding	4940-01-090-1231	SC 3431-95-CL-A04
5	C	Pusher, RO Element (BII)	4610-01-527-0101	33901222
6	O	Gauge, Pressure, 0-1000 psig		45-1082AS-02L-1000
7	F	Sewing Machine, Industrial	3530-00-892-4631	251-12
8	C	C-Spanner (BII)	5120-01-528-0177	33902284
9	O	Gauge, Pressure, 0-15 psig	6685-01-526-9840	CAH-146
10	O	Multimeter, Digital		IDEAL INDUSTRIES 61-360
11	O	Tool, High Pressure Pump Cylinder Liner Removal (composite-body pump)		P502704
12	O	Tool, High Pressure Pump Bearing Removal / Installation (composite-body pump)		P502677
13	O	Tool Set, Pump Maintenance (metal-body pump)		180Z0232

Table 3. Remarks for TWPS.

REMARKS CODE	REMARKS
A	Crew/Operator Preventive Maintenance Checks and Services (PMCS)
B	Field level maintenance repairs by component replacement
C	Crew/Operator replaces gaskets
D	Field maintenance changes oil, oil filter, fuel filter, adjusts valve clearance
E	Field maintenance replaces pump internal parts (impeller, wear plate, seals)
F	Field maintenance weld and metal repairs.
G	Field level maintenance performs minor mechanical and electrical repairs
H	Refer to TM 10-5430-237-12&P for repair procedures
I	Field maintenance performs 1000-hr and 2000-hr pump overhauls
J	Crew/Operator replaces O-rings, RO elements
K	Field maintenance changes oil, oil filter, adjusts belt tension, replaces belt
L	Crew/Operator replaces purification cartridge
M	Field maintenance fabric repairs
N	Crew/Operator replaces air filter
O	Crew/Operator adjusts pressure switch assembly PSL/PSH-901 and pressure control valves PRV-901 and PRV-902
P	Crew/Operator replaces air filter
Q	Field level maintenance replaces locking arm assembly on 3 x 10 raw water hoses
R	Crew/Operator replaces MF filter element
S	Field maintenance adjusts diesel heater air pump output pressure

END OF WORK PACKAGE

TACTICAL WATER PURIFICATION SYSTEM (TWPS) EXPENDABLE AND DURABLE ITEMS LIST

0038 00

INTRODUCTION

Scope

This work package lists expendable and durable items you will need to operate and maintain the Tactical Water Purification System (TWPS). This list is for information only and is not authority to requisition the listed items. These items are authorized to you by CTA 50-970, Expendable/Durable Items (Except Medical, Class V Repair Parts, and Heraldic Items), CTA 50-909, Field and Garrison Furnishings and Equipment or CTA 8-100, Army Medical Department Expendable/Durable Items.

Refer to TM 9-6115-672-14 for expendable and durable items for the Generator, Skid-Mounted, Tactical Quiet, 60 KW, 50/60 Hz.

Refer to TM 10-6630-222-12&P for expendable and durable items for the Water Quality Analysis Set: Purification (WQAS-P).

Explanation of Columns in the Expendable/Durable Items List

Column (1) – Item No. This number is assigned to the entry in the list and is referenced in the narrative instructions to identify the item (e.g., Use brake fluid (WP 0098 00, item 5)).

Column (2) – Level. This column identifies the lowest level of maintenance that requires the listed item (C=Operator/Crew, O=Unit Maintenance, F=Direct Support).

Column (3) – National Stock Number (NSN). This is the NSN assigned to the item which you can use to requisition the item.

Column (4) – Item Name, Description, Part Number/(CAGEC). This column provides the other information you need to identify the item. The last line below the description is the part number and the Commercial and Government Entity Code (CAGEC) (in parentheses).

Column (5) – U/I. Unit of Issue code shows the physical measurement or count of an item, such as gallon, dozen, gross, etc.

Table 1. Expendable and Durable Items List.

(1) ITEM NO.	(2) LEVEL	(3) NATIONAL STOCK NUMBER (NSN)	(4) ITEM NAME, DESCRIPTION, PART NUMBER/(CAGEC)	(5) U/I
1	O	8040-01-501-5557	Adhesive, Silicone, 3 oz tube RTV 732 (71984)	TU
2	C		Antiscalant, 5 gal pail 7078886 (57394)	PL
3	C	8030-00-422-9584	Antiseize Compound, Marine Grade, 8 oz can NMBT-8 (1Y2R4)	CN
4	C	6135-00-826-4798	Battery, Chlorine Photometer AAA, 1.5v PC2400 (90303)	EA
5	C	6135-00-835-7211	Battery, Flashlight, Size D, package of 6 HD-D (77542)	PG
6	C	6135-01-447-0949	Battery, TDS Meter, 9 VDC, Package of 2 MN1604 (80204)	PG
7	C	6810-01-527-4590	Bisulfate, Sodium, 12-oz. bags, Container of 10 803-07880 (09647)	EA
8	C	5110-01-428-5269	Blade, Knife, package of 5 11-921 (1CV05)	PG
9	C	6840-00-238-8115	Calcium Hypochlorite, Disinfectant 5-lb bottle 803-07882 (0EXU3)	BT
10	C	6840-01-065-2410	Calcium Hypochlorite, 100-lb drum (47695)	DR
11	C	6640-01-490-7587	Chlorine Test Strips (50 Strips per Bottle) 27450-50 (91224)	BT
12	C	6810-01-527-0515	Citric Acid, 20-lb bucket 803-07891 (0EXU3)	EA
13	C	6810-00-141-2942	Citric Acid, 50-lb drum A-A-59147 (58536)	DR
14	O	5350-00-161-9066	Cloth, Abrasive, package of 50 sheets 0514402459 (76318)	PG
15	C	8305-01-526-9825	Cloth, Drop, Fuel Absorbent 7516T48 (39428)	EA
16	C	6640-01-491-0344	Conductivity Standard, 447 uS/cm 20-ml pouches (20 pack) U-35653-10 (05668)	PG

Table 1. Expendable and Durable Items List. – Continued.

(1) ITEM NO.	(2) LEVEL	(3) NATIONAL STOCK NUMBER (NSN)	(4) ITEM NAME, DESCRIPTION, PART NUMBER/(CAGEC)	(5) U/I
17	C	6640-01-491-0346	Conductivity Standard, 1413 uS/cm 20-ml pouches (20 pack) U-35653-11 (05668)	PG
18	C	6640-01-491-0345	Conductivity Standard, 15000 uS/cm 20-ml pouches (20 pack) U-35653-13 (05668)	PG
19	C	8030-00-414-7423	Corrosion Preventive Compound, 16 oz spray bottle, box of 12 T32CP90S6 (03GK3)	BX
20	C	6640-01-490-7584	Demineralizer Bottle (177 ml) 14299-00 (91224)	BT
21	O	6850-00-664-5685	Dry Cleaning Solvent, 1 qt can AA59601-1D (58536)	QT
22	C	6630-01-359-3467	Electrode Storage Solution, for pH meter (475 ml) 13-641-908 (22527)	EA
23	C	4510-01-496-6954	Eyewash Station Refill 5T064 (25795)	EA
24	C	6810-01-359-4919	Glycerin, 16 oz bottle 13229E0172 (97403)	BT
25	O	9150-01-197-7690	Grease, Automotive and Artillery M-10924C (81349)	CN
26	O	9150-00-053-0101	Grease, Molybdenum Disulfide, 3 lb can MOLYKOTE Z (94999)	CN
27	C	6850-01-528-9969	High pH Cleaner 2250P (17534)	EA
28	C	6850-00-569-7690	Leak Test Compound, 1 gal bottle 372E (03530)	GL
29	C	6810-01-527-0515	Low pH Cleaner	DR
30	C	6850-00-294-0860	Lubricant, Silicone, Valve Seal 887-07510-000 (0EXU3)	OZ
31	C	9150-01-178-4725	Lubricating Oil, Engine, 1 qt bottle, SAE 15W-40 15W-40/QT/BT/2104 (81349)	QT
32	C	4240-01-527-0105	Mask, Air Filtering (Package of 5) 67644 (6M644)	PG
33	C	9150-01-527-0464	Oil, Air Compressor, 1 qt bottle 887-07607-000 (0EXU3)	QT
34	C	7920-00-151-6120	Pad, Scouring, package of 10 7920-00-151-6120 (83421)	PG
35	C	9150-00-250-0926	Petrolatum, Technical, 1.75 lb can 14P1 (82146)	CN

TACTICAL WATER PURIFICATION SYSTEM (TWPS) EXPENDABLE AND DURABLE ITEMS LIST

(1) ITEM NO.	(2) LEVEL	(3) NATIONAL STOCK NUMBER (NSN)	(4) ITEM NAME, DESCRIPTION, PART NUMBER/(CAGEC)	(5) U/I
36	C	6630-01-491-0691	pH 7 Standard Buffer Pack, Package of 25 pack 13-641-275 (22527)	EA
37	C	6515-01-413-7414	Plug, Ear 0485 (3W556)	PR
38	C	6640-01-491-6490	PPD-2 Powder Pop Dispenser, 200 Tests 10445A (58177)	EA
39	C	7920-00-205-1711	Rag, Wiping 7920-00-205-1711 (80244)	BE
40	O	8030-01-025-1692	Sealing Compound, Loctite 242, 250 cc bottle 24241 (05972)	BT
41	O		Sealing Compound, 1 pt can (05972)	CN
42	O	8030-01-505-0628	Sealing Compound, 6 oz tube with separate catalyst PR-1440 B-2 (83574)	CA
43	C	6810-01-527-4594	Sodium Bisulfite, 10-lb bucket 803-07892 (09647)	EA
44	C	6810-01-527-4590	Sodium Bisulfite, 12-oz bags, container of 10 803-07880 (09647)	EA
45	C		Sodium Bisulfite, 50-lb bag 7128004 (57394)	BG
46	C	6810-01-386-9964	Sodium Carbonate, 50 lb container 90111 (3D914)	EA
47	C	6810-01-527-0510	Sodium Hydroxide (Caustic), 1 gal. bottle 803-07888 (09647)	GL
48	C	9905-00-537-8955	Tag, Marker, package of 50 9905-00-537-8955 (64067)	PG
49	C	8030-00-889-3535	Tape, Antiseizing, roll, 1/2” wide P5025-2R (81755)	EA
50	C	8030-00-889-3534	Tape, Antiseizing, roll, 1/4” wide P5025-1 (81755)	EA
51	C	4440-01-475-9949	Vapor Capsule, Corrosion Inhibiting VC2-1 (08TA7)	EA

REVERSE OSMOSIS ELEMENT PERFORMANCE LOG

A Reverse Osmosis (RO) Element Performance Log is included in this work package. Maintaining the log will help determine the need for RO element replacement. The RO Element Performance Log Form should be kept in this manual and locally reproduced when forms are needed.

RO ELEMENT PERFORMANCE LOG

Unit Serial #: _____

Test date: _____ Operating Hour Meter Reading: _____

Product flow: _____ Product TDS: _____ Source water TDS: _____

Source water Temp: _____ Source water location: _____

Element #	Product TDS	Product Flow	Element #	Product TDS	Product Flow
1					
			2		
			3		
4					
5					
			6		
			7		
8					
9					
			10		

Unit Serial #: _____

Test date: _____ Operating Hour Meter Reading: _____

Product flow: _____ Product TDS: _____ Source water TDS: _____

Source water Temp: _____ Source water location: _____

Element #	Product TDS	Product Flow	Element #	Product TDS	Product Flow
1					
			2		
			3		
4					
5					
			6		
			7		
8					
9					
			10		

REVERSE OSMOSIS % CLEAN CALCULATION

This work package provides the procedure for calculating the Reverse Osmosis (RO) % Clean Factor. This factor indicates the water production performance of the TWPS RO membranes relative to the performance of new, clean membranes. The calculation compares the permeability, or ease of water flow, through the RO membranes with the permeability of new clean membranes. The result is expressed as a percentage. For example, a % Clean Factor of 85% means that the RO membranes are performing at 85% of the new, clean membrane performance. As the % Clean Factor becomes lower, the required operating pressure increases. Refer below for how to use the % Clean Factor data to determine the need for RO cleaning and to determine the performance limitations resulting from low % Clean values.

The data required to perform the calculation is obtained from the Operating Data Log, WP 0049, TM 10-4610-309-10.

TACTICAL WATER PURIFICATION SYSTEM (TWPS) SUPPORTING INFORMATION REVERSE OSMOSIS % CLEAN CALCULATION

RO % CLEAN CALCULATION

The following data from the Operational Data Log is required:

- Feed TDS (mg/l)
- RO Feed Pressure (psig)
- Product Flow (gpm)
- Feed Temperature (^{0}F)

Step 1

With the Feed TDS and the Feed Temperature, use Table 1 to determine Factor A. Use the table values closest to the actual Feed TDS and Feed Temperature to determine Factor A.

Table 1. Factor A.

Feed TDS	Feed Temperature (^{0}F)																
	32	35	40	45	50	55	60	65	70	75	80	85	90	95	100	105	110
500	2	3	3	3	3	3	3	3	3	3	3	3	3	3	3	3	3
1000	5	5	5	5	5	5	5	5	5	5	5	6	6	6	6	6	6
2000	10	10	10	10	10	11	11	11	11	11	11	11	11	11	11	12	12
3000	15	15	15	15	16	16	16	16	16	16	17	17	17	17	17	17	17
4000	20	21	21	21	21	21	22	22	22	22	22	23	23	23	23	23	24
5000	25	25	26	26	26	26	27	27	27	27	28	28	28	28	29	29	29
6000	31	31	31	32	32	32	33	33	33	34	34	34	34	35	35	35	35
7000	36	36	37	37	37	38	38	38	39	39	39	40	40	41	41	41	42
8000	41	42	42	42	43	43	44	44	45	45	45	46	46	47	47	48	48
9000	47	47	47	48	48	49	49	50	50	51	51	52	52	53	53	53	54
10000	51	51	52	52	53	53	54	54	55	55	56	56	57	58	58	59	59
11000	57	57	58	58	59	60	60	61	61	62	62	63	64	64	65	65	66
12000	62	62	63	64	64	65	66	66	67	68	68	69	69	70	71	71	72
13000	67	68	68	69	70	70	71	72	72	73	74	75	75	76	77	77	78
14000	72	73	74	74	75	76	77	77	78	79	80	80	81	82	82	83	84
15000	77	78	78	79	80	81	81	82	83	84	85	85	86	87	88	89	89
16000	83	83	84	85	86	87	88	88	89	90	91	92	93	93	94	95	96
17000	88	89	89	90	91	92	93	94	95	96	97	97	98	99	100	101	102
18000	93	94	95	96	97	98	98	99	100	101	102	103	104	105	106	107	108
19000	98	99	100	101	102	103	104	105	106	107	108	109	110	111	112	113	114
20000	104	104	105	106	107	108	109	110	112	113	114	115	116	117	118	119	120
21000	109	109	110	112	112	114	115	116	117	118	119	120	122	123	124	125	126
22000	114	115	116	117	118	119	120	122	123	124	125	126	127	129	130	131	132
23000	119	120	121	122	123	125	126	127	128	130	131	132	133	134	136	137	138
24000	124	125	126	128	129	130	131	133	134	135	136	138	139	140	141	143	144
25000	129	130	132	133	134	136	137	138	139	141	142	143	145	146	147	149	150
26000	135	135	137	138	140	141	142	144	145	146	148	149	151	152	153	155	156
27000	140	141	142	144	145	146	148	149	151	152	153	155	156	158	159	161	162
28000	145	146	147	149	150	152	153	155	156	158	159	161	162	164	165	167	168
29000	150	151	153	154	156	157	159	160	162	162	165	166	168	169	171	172	174
30000	155	156	158	159	161	163	164	166	167	169	171	172	174	175	177	178	180
31000	161	162	163	165	166	168	170	171	173	175	176	178	180	181	183	184	186
32000	166	167	168	170	172	173	175	177	179	180	182	184	185	187	189	190	192
33000	171	172	174	175	177	179	181	182	184	186	188	189	191	193	195	196	198
34000	176	77	179	181	183	184	186	188	190	192	193	195	197	199	200	202	204

Table 1. Factor A – Continued.

Feed TDS	Feed Temperature (^{0}F)																
	32	35	40	45	50	55	60	65	70	75	80	85	90	95	100	105	110
35000	181	182	184	186	188	190	192	193	195	197	199	201	203	205	206	208	210
36000	186	188	190	191	193	195	197	199	201	203	205	207	208	210	212	214	216
37000	192	193	195	197	199	201	203	205	206	208	210	212	214	216	218	220	222
38000	197	198	200	202	204	206	208	210	212	214	216	218	220	222	224	226	228
39000	202	203	205	207	209	212	214	216	218	220	222	224	226	228	230	232	234
40000	207	208	211	213	215	217	219	221	223	225	227	230	232	234	236	238	240
41000	212	214	216	218	220	222	225	227	229	231	233	235	237	240	242	244	246
42000	218	219	221	223	226	228	230	232	234	237	239	241	243	246	248	250	252
43000	223	224	226	229	231	233	235	238	240	242	245	247	249	251	254	256	258
44000	228	229	232	234	236	239	241	243	246	248	250	253	255	257	260	262	264
45000	233	235	237	239	242	244	246	249	251	254	256	258	261	263	265	268	270
46000	238	240	242	245	247	250	252	254	257	259	262	264	267	269	271	274	276
47000	244	245	248	250	252	255	257	260	262	265	267	270	272	275	277	280	282
48000	249	250	253	255	258	260	263	265	268	271	273	276	278	281	283	286	288
49000	254	255	258	261	263	266	268	271	274	276	279	281	284	286	289	292	294
50000	259	261	263	266	269	271	274	277	279	282	284	287	290	292	295	298	300
51000	264	266	269	271	274	277	279	282	285	287	290	293	296	298	301	304	306
52000	270	271	274	277	279	282	285	288	290	293	296	299	301	304	307	310	312
53000	275	276	279	282	285	288	290	293	296	299	302	304	307	310	313	316	318
54000	280	282	284	287	290	293	296	299	302	304	307	310	313	316	319	321	324
55000	285	287	290	293	296	298	301	304	307	310	313	316	319	322	325	327	330
56000	290	292	295	298	301	304	307	310	313	316	319	322	325	328	330	333	336
57000	295	297	300	303	306	309	312	315	318	321	324	327	330	333	336	339	342
58000	301	303	306	309	312	315	318	321	324	327	330	333	336	339	342	345	348
59000	306	308	311	314	317	320	323	326	330	333	336	339	342	345	348	351	354
60000	311	313	316	319	322	326	329	332	335	338	341	345	348	351	354	357	360

Step 2

With the product flow rate, use Table 2 to determine Factor B. Use the table product flow rate value that is closest to the actual value.

Table 2. Factor B.

Product Flow gpm	Factor B		Product Flow gpm	Factor B		Product Flow gpm	Factor B
15.0	2.35		19.5	2.51		24.0	2.71
15.5	2.36		20.0	2.53		24.5	2.73
16.0	2.38		20.5	2.55		25.0	2.76
16.5	2.40		21.0	2.57		25.5	2.78
17.0	2.41		21.5	2.59		26.0	2.81
17.5	2.43		22.0	2.61		26.5	2.84
18.0	2.45		22.5	2.63		27.0	2.87
18.5	2.47		23.0	2.66			
19.0	2.49		23.5	2.68			

Step 3

With the Feed Temperature, use Table 3 to determine Factor TCF. TCF is the **T**emperature **C**orrection **F**actor that converts the actual performance to what it would be at 77 degrees F.

Table 3. Factor TCF.

Feed Temp	TCF		Feed Temp	TCF		Feed Temp	TCF		Feed Temp	TCF
32	0.50		52	0.68		72	0.93		92	1.26
33	0.51		53	0.69		73	0.94		93	1.28
34	0.52		54	0.70		74	0.96		94	1.30
35	0.53		55	0.71		75	0.97		95	1.32
36	0.53		56	0.72		76	0.98		96	1.34
37	0.54		57	0.74		77	1.00		97	1.36
38	0.55		58	0.75		78	1.02		98	1.38
39	0.56		59	0.76		79	1.03		99	1.40
40	0.57		60	0.77		80	1.05		100	1.42
41	0.58		61	0.78		81	1.06		101	1.45
42	0.58		62	0.79		82	1.08		102	1.47
43	0.59		63	0.81		83	1.10		103	1.49
44	0.60		64	0.82		84	1.11		104	1.51
45	0.61		65	0.83		85	1.13		105	1.54
46	0.62		66	0.84		86	1.15		106	1.56
47	0.63		67	0.86		87	1.17		107	1.58
48	0.64		68	0.87		88	1.18		108	1.61
49	0.65		69	0.88		89	1.20		109	1.63
50	0.66		70	0.90		90	1.22		110	1.66
51	0.67		71	0.91		91	1.24			

Step 4

Calculate:

Factor AB = (Factor A) x (Factor B).

Factors A and B are determined from steps 1 and 2 above. Factor AB is the average osmotic pressure of the feed water as it is concentrated within the RO elements.

Step 5

Calculate:

NDP = RO Feed Pressure – 45 – AB

NDP is the **n**et **d**riving **p**ressure. This is the average pressure driving the product water through the RO elements.

Step 6

Calculate:

C = TCF x NDP

C is the net driving pressure that would be required at 77 degrees F.

Step 7

Calculate:

P(TWPS) = Product Flow Rate / C

P(TWPS) is the actual TWPS RO membrane **p**ermeability (GPM per PSI)

Step 8

Calculate:

P = 0.1628 – AB/10,000

P is the expected new RO element membrane **p**ermeability (GPM/PSI)

Step 9

Calculate:

%Clean = 100 x P(TWPS)/P

Step 10

Enter the calculated value for %Clean in the Comments section of the Operating Data Log (WP 0049, TM 10-4610-309-10) in line with the data used. Compare this value with earlier values calculated while deployed on the current mission. A decreasing value is an indication of membrane fouling. If the decrease exceeds 10% (for example: a decrease from 95% to 85%), cleaning should be scheduled. Refer to WP0014, TM 10-4610-309-10.

Example

The following data from the Operational Data Log is recorded:

- Feed TDS (mg/l): 35,800
- RO Feed Pressure (psig): 780
- Product Flow (gpm): 20.5
- Feed Temperature (^{0}F): 80

From table 1, Factor A = 205

From Table 2 Factor B = 2.55

From Table 3, Factor TCF = 1.05

Factor AB = 523

NDP = 780 – 45 – 523 = 212

C = 212 x 1.05 = 223

P(TWPS) = 20.5/223 = 0.092

P = 0.1628 – 523/10000 = 0.11

% Clean = 100 x 0.092/0.11 = 83.6%

TACTICAL WATER PURIFICATION SYSTEM (TWPS) FIELD MAINTENANCE ADDITIONAL AUTHORIZATION LIST

Scope

This work package lists additional items you are authorized for the support of the Tactical Water Purification (TWPS).

General

This list identifies items that do not have to accompany the TWPS and that do not have to be turned in with it. These item(s) are all authorized to you by CTA, MTOE, TDA, or JTA.

Explanations of Columns in the AAL

Column (1), National Stock Number, identifies the stock number of the item to be used for requisitioning purposes.

Column (2), Description, CAGEC, and Part Number, identifies the Federal item name (in all capital letters) followed by a minimum description when needed. The last line below the description is the CAGEC (Commercial and Government Entity Code) (in parentheses and the part number.

Column (3), Usable On Code, when applicable, gives you a code if the item you need is not the same for different models of the equipment.

Column (4), U/M (unit of measure), indicates how the item is issued for the National Stock Number shown in column (1).

Column (5), Qty Recom, indicates the quantity recommended.

Table 1. Additional Authorization List

(1) National Stock Number (NSN)	(2) Description, Part Number/(CAGEC)	(3) Usable On Code	(4) U/I	(5) Qty Recom
4610-01-550-1768	RECIRCULATION KIT USMC-TWPS-RECI-KT-1 (79343)		KT	1

END OF WORK PACKAGE

Alkali – Various soluble salts, principally of sodium, potassium, magnesium, and calcium, that have the property of combining with acids to form neutral salts and may be used in chemical water treatment processes.

Brackish Water – Water that is unfit for drinking because of salty or unpleasant tastes caused by the presence of excessive amounts of dissolved chemicals, chlorides, sulfates, and alkalis.

Chlorine – A chemical that is applied in water purification processes to product water to disinfect the water and prevent microbial growth in the water. As a gas, its color is greenish-yellow and is about 2 ½ times heavier than air. As a liquid, it is amber in color and is about 1-½ times heavier than water. Chlorine is toxic to all organisms and is corrosive to most metals.

Filtrate – Raw water that has had particles and microscopic organisms removed from it using a process of micro filtration.

Micro filtration – A filtration system capable of filtering particles and bacteria measuring as small as a micron or a portion of a micron.

Palatable Water – Water that is pleasing to the taste and significantly free from color, turbidity, taste, and odor. Does not imply potability.

Permeate – Filtrate (filtered water) that has had dissolved solids (salts and minerals) removed from it using the process of reverse osmosis.

Potable – (1) Water that does not contain any objectionable substances or pollution and is suitable for human consumption. (2) Water that is free from disease-producing organisms, poisonous substances, chemical or biological agents, and radioactive contaminants which make it unfit for human consumption and many other uses. Potable water may or may not be palatable.

Priming – (1) The action of starting the flow in a pump or siphon. (2) The first coat applied to a surface to prevent corrosion to protect the surface.

Product Water – Water that has been treated in the water purification system and is ready to be consumed (also called finished water, permeate, or potable water.)

Raw Water – Untreated water; usually the water entering the first treatment unit of a water purification system. Water used as a source of water supply taken from a natural or impounded body of water, such as a stream, lake, pond, or ground water aquifer.

Reverse Osmosis – The process in which pressure is applied to a concentrated solution to force liquid from the concentrated solution through a semi-permeable membrane. The membrane allows the passage of solvent (water) but not dissolved solids (solutes). The liquid produced is de-mineralized water called product water or permeate.

Sodium Bisulfite – A chemical used in the tactical water purification system when the raw water contains chlorine. Chlorine will rapidly damage MF filter membranes and slowly degrade RO elements. Sodium bisulfite neutralizes chlorine.

Turbidity – (1) A condition in water caused by the presence of suspended matter resulting in the scattering and absorption of light rays. (2) A measure of fine suspended matter in liquids.

INDEX

A

Actuator Limit Stop Replacement 0027 00
Actuator Repair, ... 0027 00
Actuator Replacement, (with Mechanical Position Indicator) 0027 00
Actuator Replacement, (with Pneumatic Position Indicator) 0027 00
Adaptor A-01 Repair/Replacement 0009 00
Adaptor A-02 Repair/Replacement 0009 00
Adaptor A-03 Repair/Replacement 0009 00
Adaptor A-04 Repair/Replacement 0009 00
Adaptor A-05 Repair/Replacement 0009 00
Adaptor A-06 Replacement 0019 00
Adaptor A-07 Replacement 0019 00
Adaptor A-08 Replacement 0019 00
Adaptor A-09 Replacement 0013 00
Adaptor A-09 Replacement 0012 00
Additional Authorization List 0041 00
AF2 Purification Filter Assembly Replacement 0015 00
Air Compressor Drive Belt Replacement 0017 00
Air Compressor Drive Belt Tension Adjustment 0017 00
Air Compressor Drive Motor Replacement 0017 00
Air Compressor First Stage Valve Head Assembly Replacement 0017 00
Air Compressor Intermediate Filter Service 0017 00
Air Compressor Lubrication System, Bleed 0017 00
Air Compressor Oil Change 0017 00
Air Compressor Oil Pressure Regulator Replacement 0017 00
Air Compressor Oil Pump Replacement 0017 00
Air Compressor Replacement 0017 00
Air Compressor Second Stage Valve Head Assembly Replacement 0017 00
Air Compressor Temperature Switch Replacement 0017 00
Air Compressor Third Stage Valve Assembly Replacement 0017 00
Air Receiver Tank R-1 Replacement 0015 00
Air System Bleed Down Procedures 0022 00
Air System Bleed Down Procedures, Entire 0015 00
Air System Bleed Down Procedures, Entire 0016 00
Air System Bleed Down Procedures, High Pressure 0015 00
Air System Bleed Down Procedures, High Pressure 0017 00
Air System Section 1 Assembly Replacement 0015 00
Air System Section 3 Assembly Replacement 0016 00
Air System Section 4 Assembly Replacement 0016 00
Air System Section 6 Assembly Replacement 0016 00
Air System, Theory of Operation 0003 00
A-TWPS Characteristics 0002 00
Auxiliary Hose Valve V-522 Replacement 0019 00
Auxiliary Pressure Control Valve HCV-401A Replacement 0013 00

B

Bail Bar, Flat Rack, Lowering and Raising 0026 00
Ball Valve Repair 0027 00
Ball Valve Replacement, Threaded 0027 00
Ball Valve Replacement, Welded 0027 00
Basket Strainer S-2 Replacement 0012 00

Bleed Down Procedures, Air System 0022 00
Bleed Down Procedures, Entire Air System 0015 00
Bleed Down Procedures, Entire Air System 0016 00
Bleed Down Procedures, High Pressure Air System 0015 00
Bleed Down Procedures, High Pressure Air System 0017 00
Bleed Procedures, Air Compressor Lubrication System 0017 00
Butterfly Valve Replacement 0027 00

C

Cable Connector Replacement 0034 00
Check Valve V-411, Reject Backflow, Replacement 0013 00
Check Valve V-512, Product, Replacement 0013 00
Check Valve V-906, Low Pressure Air, Replacement 0015 00
Check Valve V-908 Replacement 0016 00
Chemical/Biological Decontamination After an NBC Water Purification Mission 0027 00
Chemical Injection Pump Check Valve Replacement (V-613, V-623 and V-633) 0017 00
Chemical Injection Pump Foot Valve Replacement (V-611, V-621, and V-631) 0018 00
Chemical Injection Pump Repair / Discharge Cartridge Valve, O-Ring, and Flat Washer 0018 00
Chemical Injection Pump Repair / Four-Function Valve (V-612, V-622 and V-632) 0018 00
Chemical Injection Pump Repair / Pump Diaphragm 0018 00
Chemical Injection Pump Repair / Pump Head 0018 00
Chemical Injection Pump Repair / Suction Valve Assembly 0018 00
Chemical Injection Pump Replacement (CP1, CP2, and CP3) 0018 00
Chemical Injection System, Major Components 0002 00
Chemical Injection System, Theory of Operation 0003 00
Clamped-On Hose Replacement 0027 00
Cleaning and Preservation Operations, Theory of Operation 0003 00
Cleaning Waste Discharge Components, Major Components 0002 00
Cleaning Waste Storage Kit, Major Components 0002 00
CO1 Oil Water Coalescer Replacement 0015 00
CO1 Oil Water Coalescer Sintered Metal Filter Service 0015 00
CO2 Oil/Water Coalescer Replacement 0016 00
Cold Weather Kit, Major Components 0002 00
Cold Weather Module, Theory of Operation 0003 00
Compression Fitting Connected Hose Replacement 0027 00
Connector, Cable, Replacement 0034 00
Controls, Operating, Major Components 0002 00
Controls, Operating, Theory of Operation 0003 00
Cyclone Separator Repair/Replacement 0009 00

D

Diesel Engine Air Cleaner Assembly Replacement 0011 00
Diesel Engine Air Heater Assembly Replacement 0011 00
Diesel Engine Cylinder Head Components Service / Replacement 0029 00
Diesel Engine Electric Starter Assembly Replacement 0011 00
Diesel Engine Fuel Cock Replacement 0011 00
Diesel Engine Fuel Filter Service/Replacement 0011 00
Diesel Engine Fuel Injection Pump Replacement 0011 00
Diesel Engine Fuel Injection Valve Replacement 0011 00
Diesel Engine Fuel Injection Valve Service 0011 00
Diesel Engine Fuel Line Assemblies Replacement 0011 00

Diesel Engine Fuel Tank Replacement 0011 00
Diesel Engine Intake/Exhaust Valve Clearance Adjustment 0011 00
Diesel Engine Muffler Assembly Replacement 0011 00
Diesel Engine Oil and Oil Filter Replacement 0011 00
Diesel Engine Oil Level Service (Check / Add Oil) 0011 00
Diesel Engine Piston Ring Replacement 0029 00
Diesel Engine Recoil Starter Replacement 0011 00
Diesel Engine Replacement 0011 00
Diesel Heater Air Pump Pressure Adjustment 0025 00
Diesel Heater Burner Head Assembly Cleaning / Replacement 0025 00
Diesel Heater Fan Replacement 0025 00
Diesel Heater Fuel Filter Replacement 0025 00
Diesel Heater Motor Relay and Motor Testing/Replacement 0025 00
Diesel Heater Output Air Filter Replacement 0025 00
Diesel Heater Overheat Switch Testing/Replacement 0025 00
Diesel Heater Photocell Testing/Replacement 0025 00
Diesel Heater Safety Control Assembly Testing/Replacement 0025 00
Diesel Heater Spark Plug and Transformer Testing/Replacement 0025 00
Differences Between Models 0002 00
Dispensing Nozzle Replacement, V-523 ..... 0019 00
Distribution System, Extended Product Water, Major Components 0002 00
Distribution System, Extended Product Water, Theory of Operation 0003 00
Distribution System, Standard Product Water, Major Components 0002 00
Distribution System, Standard Product Water, Theory of Operation 0003 00

E

Equipment Characteristics, Capabilities, and Features 0002 00
Equipment Data 0002 00
Expansion Joint Replacement, Flexi Joint 0027 00
Expendable and Durable Items List 0038 00
Extended Product Water Distribution System, Major Components 0002 00
Extended Product Water Distribution System, Theory of Operation 0003 00

F

Fabric Wall Repair (A-TWPS) 0033 00
Feed Flow Control Panel Assembly Replacement 0022 00
Feed Flow Control Panel Feed Control Selector Valve V-914 Replacement 0022 00
Feed Flow Control Panel IP Transducer FY-102 Replacement 0022 00
Feed Flow Control Panel Pressure Gauge 0-30 psig PI-904 Replacement 0022 00
Feed Flow Control Panel Pressure Regulating Valve PRV-904 Replacement 0022 00
Feed Flow Control Panel Three Way Solenoid Valve XV-912 Replacement 0022 00
Flat Rack Latch Replacement 0026 00
Flat Rack, Lowering and Raising the Bail Bar 0026 00
Flat Rack, Rivet Nut Replacement 0032 00
Flat Rack Seal Replacement 0026 00
Flexi Joint Expansion Joint Replacement 0027 00
Floating Inlet Strainer, Anchor, Pulley and Rope System Replacement 0009 00
Floating Inlet Strainer and Anchor Deployment 0007 00
Flow Loop Status Check 0023 00

INDEX

G

General Purpose Transformer Outlet Assembly or Power Cord Replacement 0023 00
Glossary ..... Glossary
Grooved Coupling Replacement 0027 00

H

Heaters H-1 and H-2 Replacement, RO Feed Tank 0013 00
Heating Blanket Repair, Adaptor A-02 ..... 0033 00
Heating Blanket Repair, Hose 0033 00
High Pressure Pump Assembly Including Metal-Body Replacement 0014 00
High Pressure Pump Motor Replacement 0014 00
High Pressure Pump PMCS, 1000 Hour 0014 00
High Pressure Pump PMCS, 2000 Hour 0014 00
High Pressure Pump Including Metal-Body Repair 0014 00
High Pressure Pump Including Metal-Body Replacement 0014 00
Hose Replacement, Clamped-On 0027 00
Hose Replacement, Compression Fitting Connected 0027 00
Hose Replacement, Product Water Distribution 0019 00
Hose Replacement, Push-On 0029 00
Hose Replacement, Suction and Discharge 0009 00
Hose Replacement, Waste Outlet 0012 00
Hose Replacement, Waste Outlet 0013 00

I

Index ..... Index
Indicator Replacement, MF and RO System 0023 00
Insulating Cover Repair, Pump Skid 0033 00

L

Limit Stop Replacement, Actuator 0027 00
Location and Description of Major Components 0002 00
Locking Arm Assembly Replacement 0027 00
Log, Reverse Osmosis Element Performance 0038 00
Lubrication System, Bleed, Air Compressor 0017 00

M

Main Pressure Control Valve HCV-401 Replacement 0013 00
Maintenance Allocation Chart (MAC) Introduction 0036 00
Maintenance Allocation Chart (MAC) Tables 0037 00
Manifold Maintenance Shutoff Valve V-909 Replacement 0016 00
MC-TWPS Characteristics 0002 00
Micro-Filtration Assembly Repair 0029 00
Micro-Filtration (MF) System, Major Components 0002 00
Micro-Filtration (MF) System, Theory of Operation 0003 00
Micro-Filtration System Backwash Operation 0003 00

N

NBC Survivability Kit, Major Components 0002 00
NBC Water Treatment System, Major Components 0002 00
Nuclear, Biological, Chemical (NBC) System, Theory of Operation 0003 00

O

Ocean Intake Structure System (OISS) Components Replacement 0010 00
Ocean Intake Structure System (OISS) Kit, Major Components 0002 00

INDEX

OCP 1000 Ohm Potentiometer Replacement 0020 00
OCP 10-Turn Potentiometer Replacement 0020 00
OCP Alarm Horn Replacement 0020 00
OCP Computer Cable Assembly Replacement 0020 00
OCP Digital Display Replacement 0020 00
OCP Emergency Stop Push Button Replacement 0020 00
OCP Hour Meter Replacement 0020 00
OCP Illuminated Push Button Replacement 0020 00
OCP Pilot Light Replacement 0020 00
OCP Push Button Replacement 0020 00
OCP Rotary Switch Replacement 0020 00
OCP Selector Switch Replacement 0020 00
OCP Subpanel 13-Slot Chassis Power Supply Replacement 0021 00
OCP Subpanel 3-Pole Relay Replacement 0021 00
OCP Subpanel AC Input Module Replacement 0021 00
OCP Subpanel AC Terminal Replacement 0021 00
OCP Subpanel Analog Input Module Replacement 0021 00
OCP Subpanel Analog Output Module Replacement 0021 00
OCP Subpanel Circuit Breaker Replacement 0021 00
OCP Subpanel DC Terminal Replacement 0021 00
OCP Subpanel Electric Heater Replacement 0021 00
OCP Subpanel Ground Terminal Replacement 0021 00
OCP Subpanel Instrumentation Power Supply Replacement 0021 00
OCP Subpanel Memory Module Replacement 0021 00
OCP Subpanel PLC Processor Replacement 0021 00
OCP Subpanel Power Line Filter Replacement 0021 00
OCP Subpanel Relay Output Module Replacement 0021 00
OCP Subpanel Solid State Relay Replacement 0021 00
Oil/Water Coalescer CO1 Replacement 0015 00
Oil Water Coalescer, CO1, Sintered Metal Filter Service 0015 00
Oil/Water Coalescer CO2 Replacement 0016 00
Operating Controls, Major Components 0002 00
Operating Controls, Theory of Operation 0003 00

P

PDP 125 Amp Main Power Circuit Breaker Replacement 0024 00
PDP Busbar Jumper Replacement 0024 00
PDP Circuit Breaker Replacement 0024 00
PDP Circuit Breaker with Auxiliary Switch Replacement 0024 00
PDP Contactor/Overload Relay/Surge Suppressor Replacement 0024 00
PDP Contactor/Surge Suppressor Replacement 0024 00
PDP Distribution Block Replacement 0024 00
PDP GFI Module Replacement 0024 00
PDP Light Outlet Replacement 0024 00
PDP Light Switch Replacement 0024 00
PDP Main Circuit Breaker Handle Replacement 0024 00
PDP Power Connector Replacement 0024 00
PDP Surge Arrester Assembly Replacement 0024 00
PDP Surge Arrester Replacement 0024 00
PDP Surge Suppressor Replacement 0024 00

INDEX

PDP Transformer Replacement 0024 00
PDP Utility Outlet Replacement 0024 00
Pipe Coupling Replacement 0027 00
Pipe Tape Installation, Antiseize 0027 00
Piston Ring Replacement, Diesel Engine 0029 00
Power Distribution System, Major Components 0002 00
Power Distribution System, Theory of Operation 0003 00
Pressure Control Valve HCV-401A, Auxiliary, Replacement 0013 00
Pressure Control Valve HCV-401, Main, Replacement 0013 00
Pressure Gauge PI-901, 0-1500 psig Replacement 0015 00
Pressure Gauge PI-902, 0-160 psig Replacement 0015 00
Pressure Gauge PI-903, 0-30 psig Replacement 0016 00
Pressure Gauge PI-904, 0-30 psig Replacement, Feed Flow Control Panel 0022 00
Pressure Maintaining Valve V-905 Replacement 0015 00
Pressure Regulating Valve PRV-901 Replacement 0015 00
Pressure Regulating Valve PRV-902 Replacement 0016 00
Pressure Regulating Valve PRV-904 Replacement, Feed Flow Control Panel 0022 00
Pressure Switch Assembly PSL/PSH-901 Replacement 0015 00
Preventive Maintenance Checks and Services (PMCS), Unit 0008 00
Preventive Maintenance Checks and Services (PMCS), Unit, Introduction 0007 00
Pump, Distribution, P7, Motor Replacement 0019 00
Pump, Distribution, P7, Pump Repair/Overhaul 0019 00
Pump, Distribution, P7, Pump Replacement 0019 00
Pump, Distribution, P7, Skid Frame Replacement 0019 00
Pump, Distribution, P7, Skid Junction Box Replacement 0019 00
Pump, Distribution, P7, Skid Power Cable Replacement 0019 00
Pump, High Pressure, Assembly Replacement 0014 00
Pump, High Pressure, Motor Replacement 0014 00
Pump, High Pressure, PMCS, 1000 Hour 0014 00
Pump, High Pressure, PMCS, 2000 Hour 0014 00
Pump, High Pressure, Pump Repair 0014 00
Pump, High Pressure, Pump Replacement 0014 00
Pump, MF Feed, P-3, Electric Motor Cable Replacement 0012 00
Pump, MF Feed, P-3, Electric Motor Replacement 0012 00
Pump, MF Feed, P-3, Pump/Motor Assembly Replacement 0012 00
Pump, MF Feed, P-3, Pump Repair 0012 00
Pump, MF Feed, P-3, Skid Frame Replacement 0012 00
Pump, MF Feed, P-3, Skid Junction Box Replacement 0012 00
Pump, Raw Water, P1 and P2, Overhaul 0009 00
Pump, Raw Water, P1, Diesel Engine-Driven, Replacement 0009 00
Pump, Raw Water, P1, Skid Frame Replacement 0009 00
Pump, Raw Water, P1, Skid Junction Box Replacement 0009 00
Pump, Raw Water, P2, Electric Motor-Driven, Replacement 0009 00
Pump, Raw Water, P2, Motor Cable Replacement 0009 00
Pump, Raw Water, P2, Motor Replacement 0009 00
Pump, Raw Water, P2, Skid Frame Replacement 0009 00
Pump, Raw Water, P2, Skid Junction Box Replacement 0009 00
Pump, Raw Water, P2, Skid Power Cable Replacement 0009 00
Pump, RO Feed, P-4, Drain Valve V-211 Replacement 0013 00

Pump, RO Feed, P-4, Electric Motor Replacement 0013 00
Pump, RO Feed, P-4, Pump/Motor Assembly Replacement 0013 00
Pump, RO Feed, P-4, Pump Repair 0013 00
Purification Filter Assembly, AF2, Replacement 0015 00
Push-On Hose Replacement 0027 00

R

Raw Water System, Major Components 0002 00
Raw Water System, Theory of Operation 0003 00
Relief Valve RV-301, HP Pump, Replacement 0013 00
Relief Valve RV-302, RO Feed, Replacement 0013 00
Relief Valve RV-501, Product, Replacement 0013 00
Relief Valve RV-902 Replacement 0015 00
Reverse Osmosis Element Percent Clean Calculation 0040 00
Reverse Osmosis Element Performance Log 0039 00
Reverse Osmosis (RO) System, Major Components 0002 00
Reverse Osmosis (RO) System, Theory of Operation 0003 00
RO Element Simulator, Replacement 0006 00
RO Feed Tank Cover Hinge Repair 0013 00
RO Feed Tank Heaters H-1 and H-2 Replacement 0013 00
RO Feed Tank Replacement 0031 00
RO Feed Tank Strainer S-3, Replacement 0013 00
RO Product Flow Three-Way Valves V-501 through V-510 Replacement 0013 00
RO Vessel Replacement 0031 00
Rupture Disk RD-401, Waste Out, Repair 0012 00
Rupture Disk RD-401, Waste Out, Repair 0013 00

S

Sanitary Clamp Replacement 0027 00
Sensor Replacement, Conductivity 0023 00
Sensor Replacement, Tee Mounted Flow 0023 00
Services, Routine, Schedule of 0023 00
Service Upon Receipt 0006 00
Site and Shelter Requirements 0006 00
Solenoid Coil Replacement 0012 00
Solenoid Valve Manifold Assembly Replacement 0012 00
Solenoid Valve Replacement 0012 00
Solenoid Valve XV-901 Replacement 0016 00
Solenoid Valve XV-902 Replacement 0016 00
Solenoid Valve XV-903 Replacement 0016 00
Solenoid Valve XV-912 Replacement, Feed Flow Control Panel Three Way 0022 00
Sonic Test, MF 0016 00
Standard Product Water Distribution System, Major Components 0002 00
Standard Product Water Distribution System, Theory of Operation 0003 00
Strainer, Basket Strainer, S-2 Replacement 0012 00
Strainer, Inline RO, S-4 Replacement 0013 00
Strainer, RO Feed Tank, S-3 Replacement 0013 00

T

Tank Cover Hinge Repair, RO Feed 0013 00
Tank Repair, MF Feed, T-1 ..... 0024 00

Tank Repair, Cleaning Waste 0024 00
Tank Repair, Collapsible Product Water Distribution.....0019 00
Transformer, General Purpose, Outlet Assembly or Power Cord Replacement 0025 00
Transmitter Replacement and Configuration, Panel-Mounted Conductivity 0023 00
Transmitter Replacement and Configuration, Panel-Mounted Flow 0023 00
Transmitter Replacement, MF and RO 0023 00
Troubleshooting Procedures, Unit, TWPS.....0004 00
Troubleshooting Procedures, Unit, TWPS Control System 0005 00
Tube Fitting-Connected Tube Replacement.....0027 00
Turbocharger Feed Drain Valve V-303 Replacement.....0013 00
Turbocharger PRT-1, Pressure Recovery, Repair.....0013 00
Turbocharger PRT-1, Pressure Recovery, Replacement.....0013 00
Turbocharger Reject Drain Valve V-410 Replacement.....0013 00

U

Unpacked Equipment, Check 0006 00
Unpacked Equipment, Deprocess 0006 00

V

Vacuum Breaker VB-501, Product, Replacement 0013 00
Valves, RO Product Flow Three-Way, V-501 through V-510 Replacement.....0013 00
Vent Valve V-910 Replacement.....0016 00

W

Waste Outlet Hose Replacement.....0012 00
Waste Outlet Hose Replacement.....0013 00
Waste Out Rupture Disk RD-401 Repair 0012 00
Waste Out Rupture Disk RD-401 Repair 0013 00
Water Production Performance Characteristics.....0002 00
Winter Cover Repair (MC-TWPS).....0033 00
Wiring Diagrams.....0028 00

END OF WORK PACKAGE

SFA, Inc. WARRANTY TERMS AND PROCEDURE for the END-USER of the 1500 TWPS

Contract No. DAAE07-02-D-T001

THIS END-USER WARRANTY PROCEDURE IS NOT THE COMPLETE WARRANTY DOCUMENT. YOUR POC WILL ADMINISTER THIS WARRANTY, AND HAS A COPY OF THE COMPLETE WARRANTY, "**SFA, Inc. WARRANTY TERMS AND PROCEDURE – 1500 TWPS,**" WHICH CONTAINS OTHER APPLICABLE EXCLUSIONS AND LIMITATIONS.

WARNING THIS PRODUCT MUST BE HANDLED AND OPERATED WITH CARE AND IN STRICT ACCORDANCE WITH THE TECHNICAL MANUAL. FAILURE TO DO SO MAY RESULT IN SERIOUS INJURY OR DEATH.

This End-User statement is provided by SFA, Inc. ("Manufacturer") to the United States Army and the United States Marine Corps ("Customer") with respect to the Product under Contract No. DAAE07-02-D-T001.

Definitions

In addition to the other terms defined herein, the following definitions shall apply:

"A-Warranty POC" shall mean the United States Army Warranty Point of Contact who administers this Warranty through the Program Office at TACOM:
Karen Arnold, (586) 574-4213 / DSN 786, **karen.arnold@us.army.mil**

"MC-Warranty POC" shall mean the United States Marine Corps Point of Contact who administers this Warranty through the Program Office at MARCORSYSCOM:
Jerry Stanchina, (229) 639-6984 / DSN 567-6984, Email **jerry.stanchina@usmc.mil**

"POC" shall mean either the A-Warranty POC or the MC-Warranty POC.

"End-user" shall mean the United States Army or United States Marine Corps person or unit, or field-representative of such person or unit, who uses the Product in the field and discovers or records the potential warranty claim during such use.

"Product" shall mean A-TWPS units (NSN 4610-01-488-9656), MC-TWPS units (NSN 4610-01-4888-6961), or Marine Corps Extended Capability Modules provided under **Contract No. DAAE07-02-D-T001**

"Vendor" shall mean any merchant, manufacturer, company or person, other than Manufacturer, whose component or part is included in the Product.

SFA, Inc. WARRANTY TERMS AND PROCEDURE for the END-USER of the 1500 TWPS

Contract No. DAAE07-02-D-T001

Warranty

Manufacturer warrants for 12 months from date of DD Form 250 signature the workmanship, materials, design, and essential performance characteristics of the Product under normal use and operation in strict accordance with the Technical Manual. To be considered for warranty, any defect must be discovered within the warranty period and meet the criteria herein.

Excluded from Warranty

Exclusions from warranty include, but are not limited to, the following:

a. Workmanship defects that can be corrected following Technical Manual instructions without repair parts or replacement components (Example: Leaking pipe connection or loose electrical wire);
b. Any damage or defect occurring, at any time, during shipment of products. When returning products to Manufacturer for repair or replacement, Customer assumes all risk of loss or damage;
c. Any components of the Product that are not manufactured by Manufacturer (Wherever possible, Vendor-supplied component warranties will be passed through to Customer);
d. Repair, damage or increase in service time caused by the use, operation, modification, repair, installation, or storage of the Product in a manner not in accordance with the Technical Manual, including, but not limited to: (i) neglect or misuse, (ii) a failure or sudden surge of electrical power, (iii) storage outside of the temperature range of -28^0F to 160^0F, or (iv) any other cause other than ordinary use in accordance with the Technical Manual;
e. Repair, damage or increase in service time caused by accident by anyone other than Manufacturer personnel, fire, flood, earthquake, water, wind, lightning or other natural disaster, strike, inability to obtain materials or utilities, war, civil disturbance or any other cause beyond Manufacturer's reasonable control;
f. Normal wear parts replacement.

THE FOREGOING WARRANTIES ARE IN LIEU OF ALL WARRANTIES, EITHER EXPRESS OR IMPLIED, INCLUDING WITHOUT LIMITATION ANY IMPLIED WARRANTY OF MERCHANTABILITY, FITNESS FOR A PARTICULAR PURPOSE, NONINFRINGEMENT, AND OF ANY OTHER SIMILAR OBLIGATION ON THE PART OF MANUFACTURER.

SFA, Inc. WARRANTY TERMS AND PROCEDURE for the END-USER of the 1500 TWPS

Contract No. DAAE07-02-D-T001

Claim Procedure

Manufacturer's obligation under this warranty is limited to, at Manufacturer's option, replacing or repairing, at its facility or Vendor's facility, as applicable, any Product or part thereof that is found by Manufacturer not to conform to this warranty. Manufacturer shall have a reasonable period of time to make such replacements or repairs.

1. End-user shall immediately report the potential warranty claim to the appropriate POC.
2. Identify the Unit Serial number, hour meter reading and current location.
3. Describe the failure and the troubleshooting conducted to identify the failed component.
4. Only the POC shall contact Manufacturer's Defense Product Division, Quality Assurance Department, as soon as practicable after discovering the defect. The POC shall follow claim procedure as provided in SFA, Inc. WARRANTY TERMS AND PROCEDURE – 1500 TWPS.
5. Manufacturer shall have no obligations under this warranty with respect to any defect unless it receives such notice within 30 days following the expiration of the warranty period.

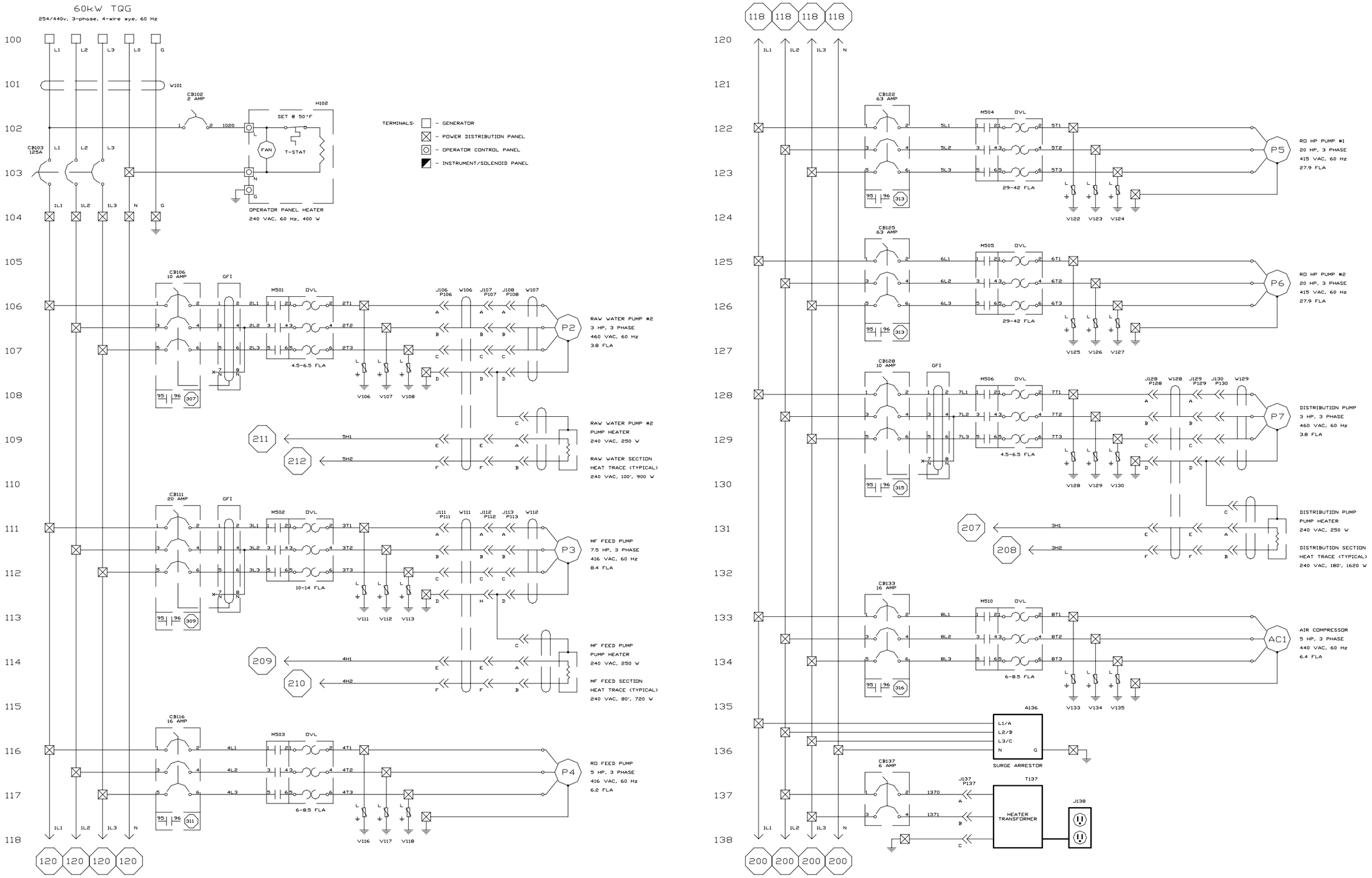

FO-1. TWPS Schematic Diagrams (Sheet 1 of 8).

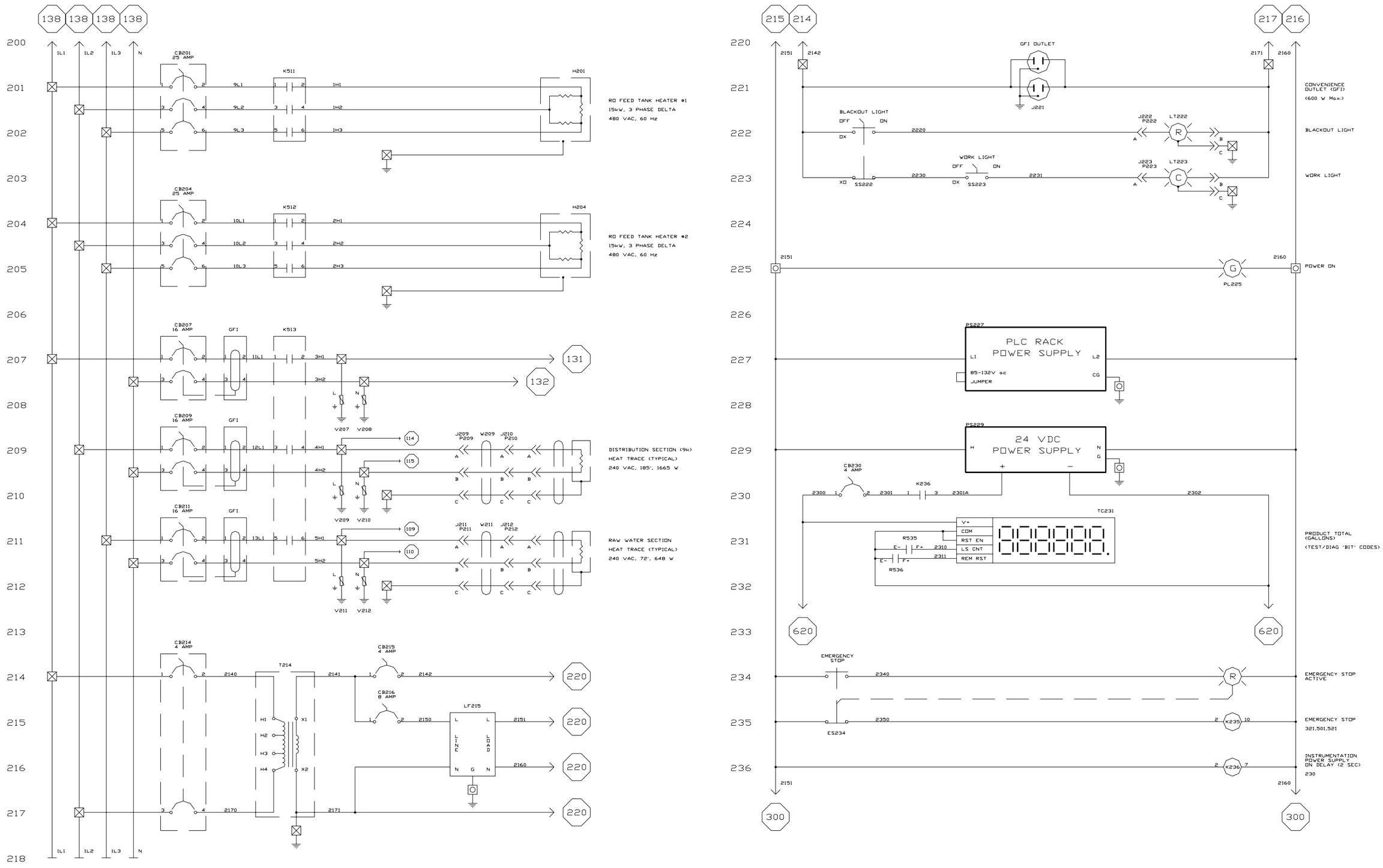

FO-1. TWPS Schematic Diagrams (Sheet 2 of 8).

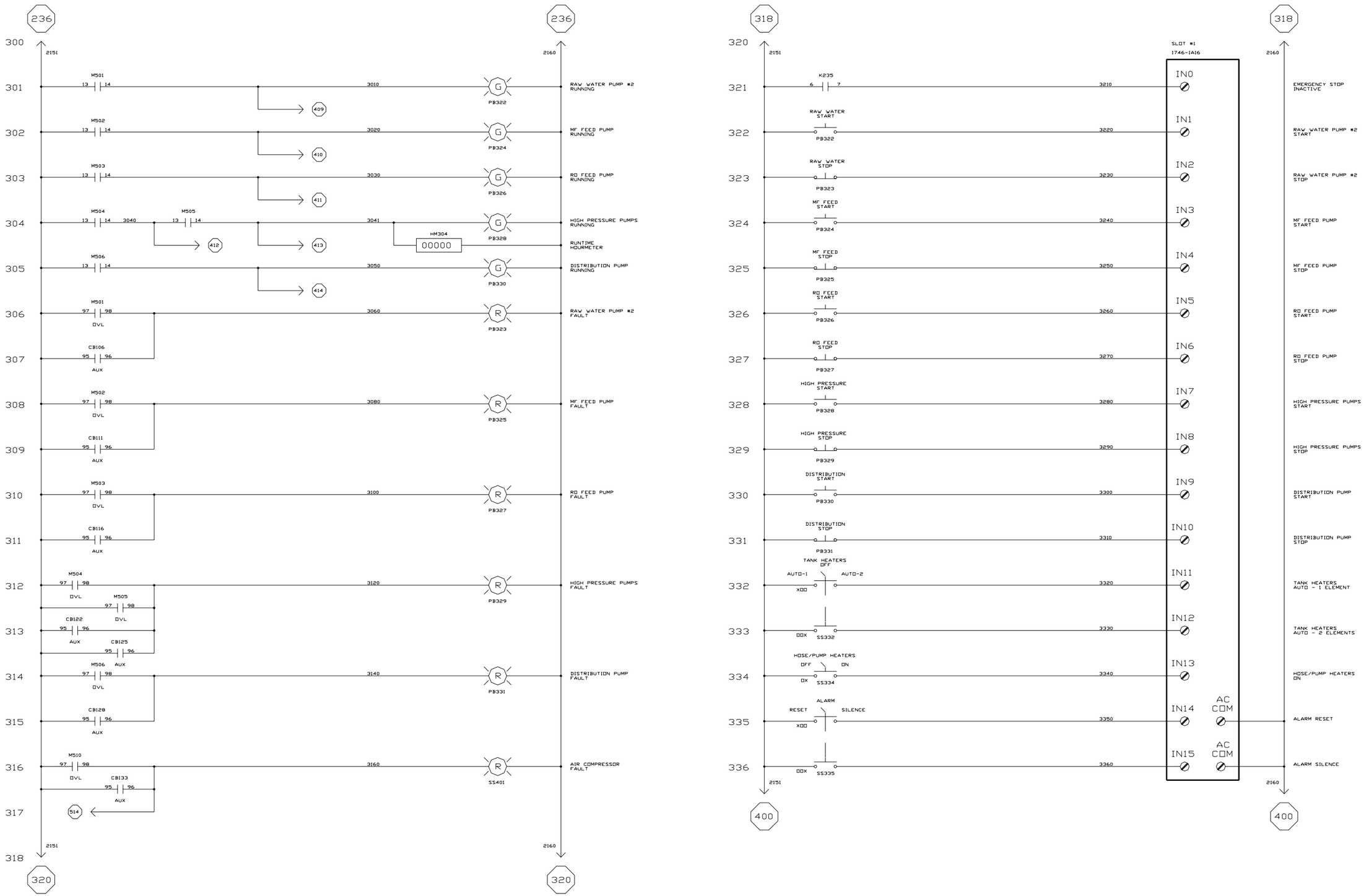

FO-1. TWPS Schematic Diagrams (Sheet 3 of 8).

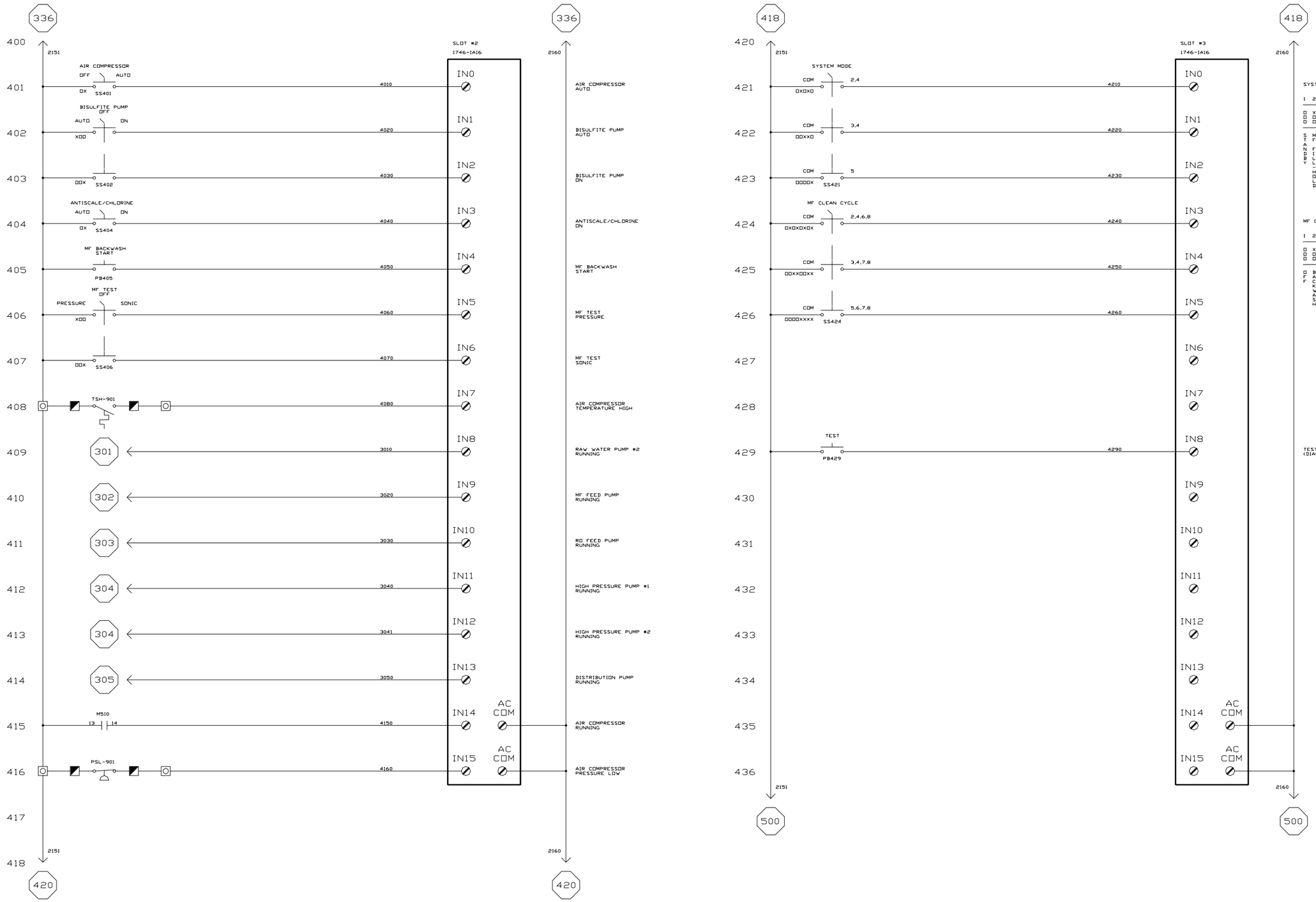

FO-1. TWPS Schematic Diagrams (Sheet 4 of 8)

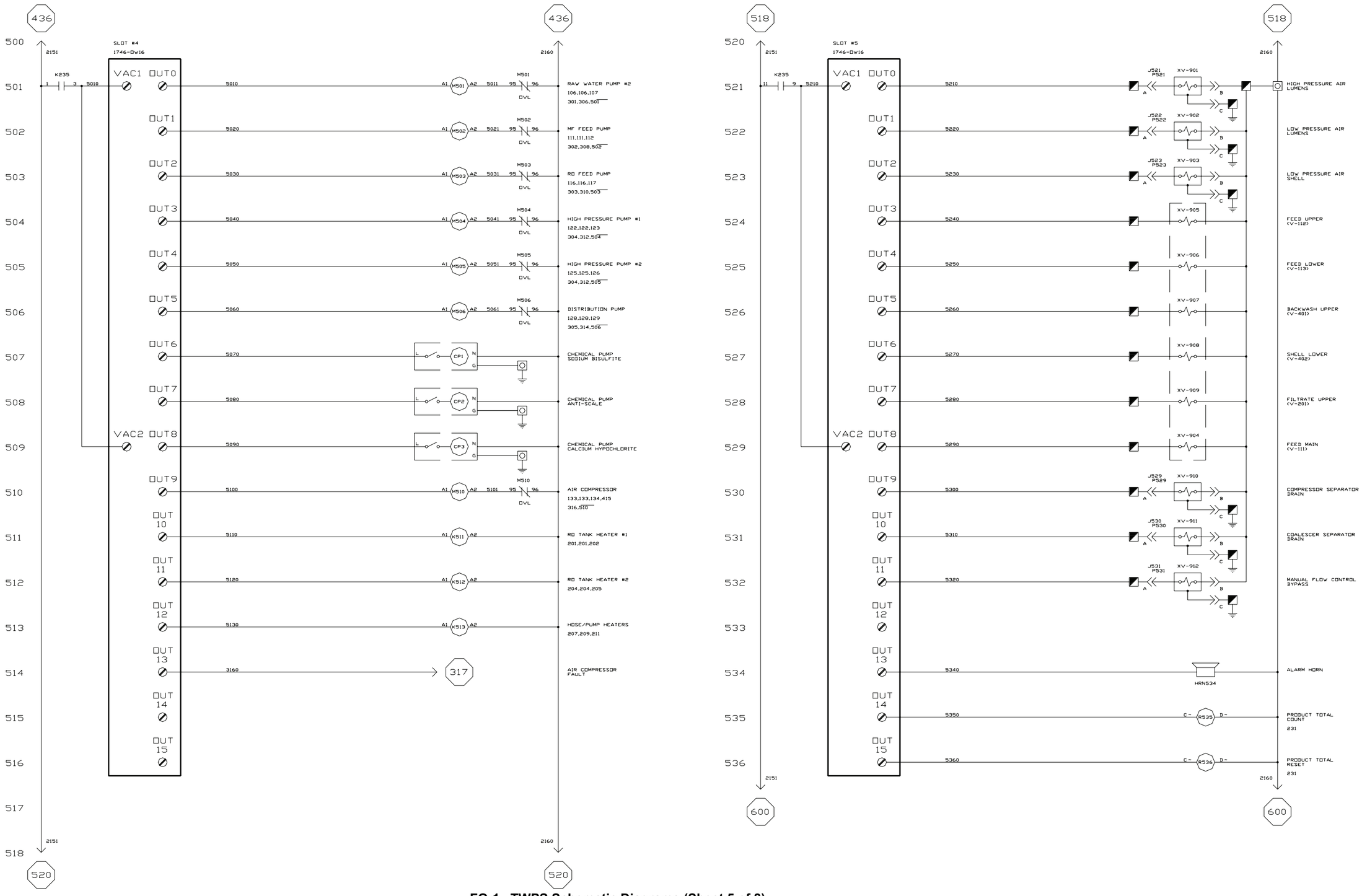

FO-1. TWPS Schematic Diagrams (Sheet 5 of 8).

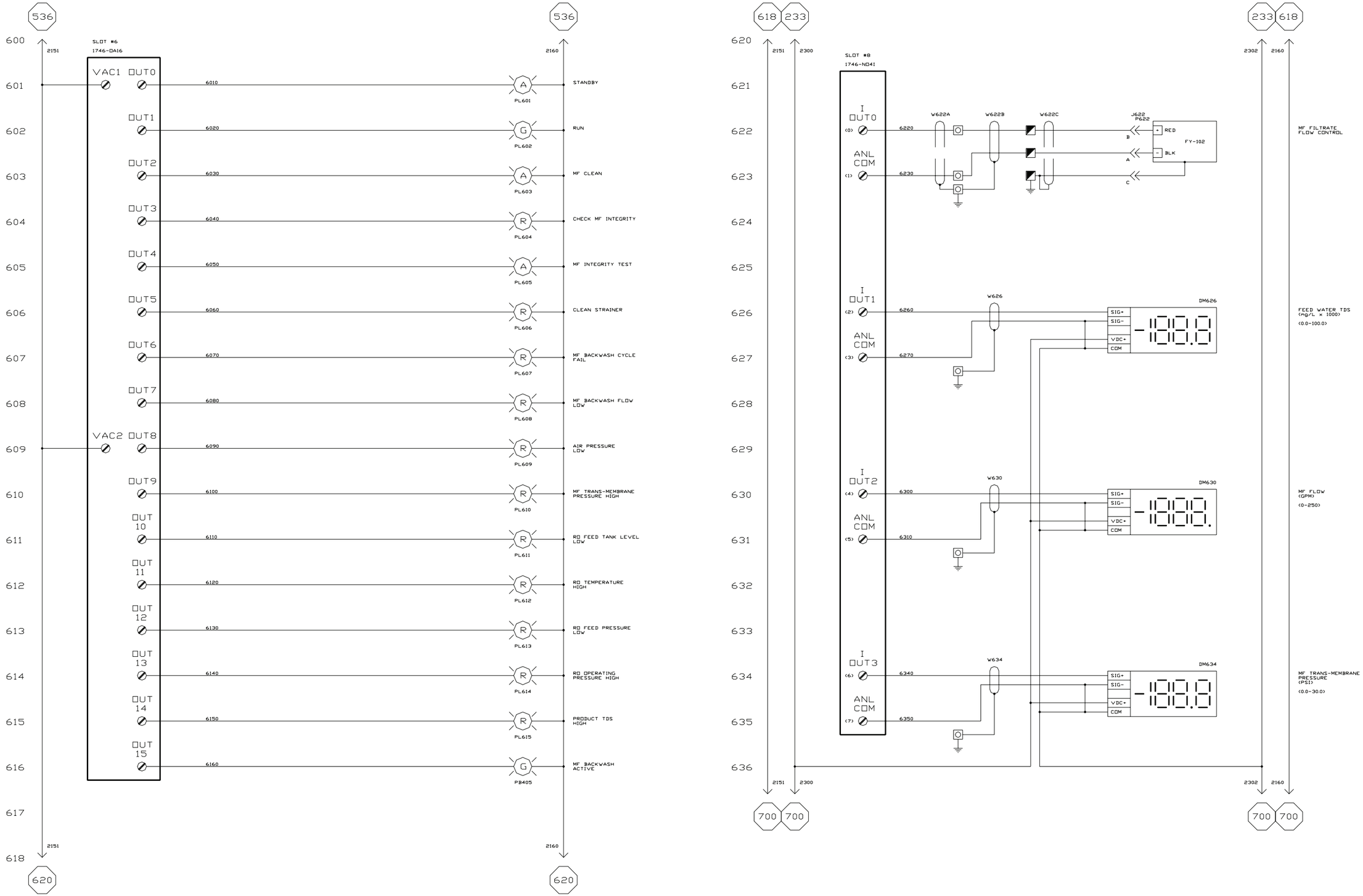

FO-1. TWPS Schematic Diagrams (Sheet 6 of 8).

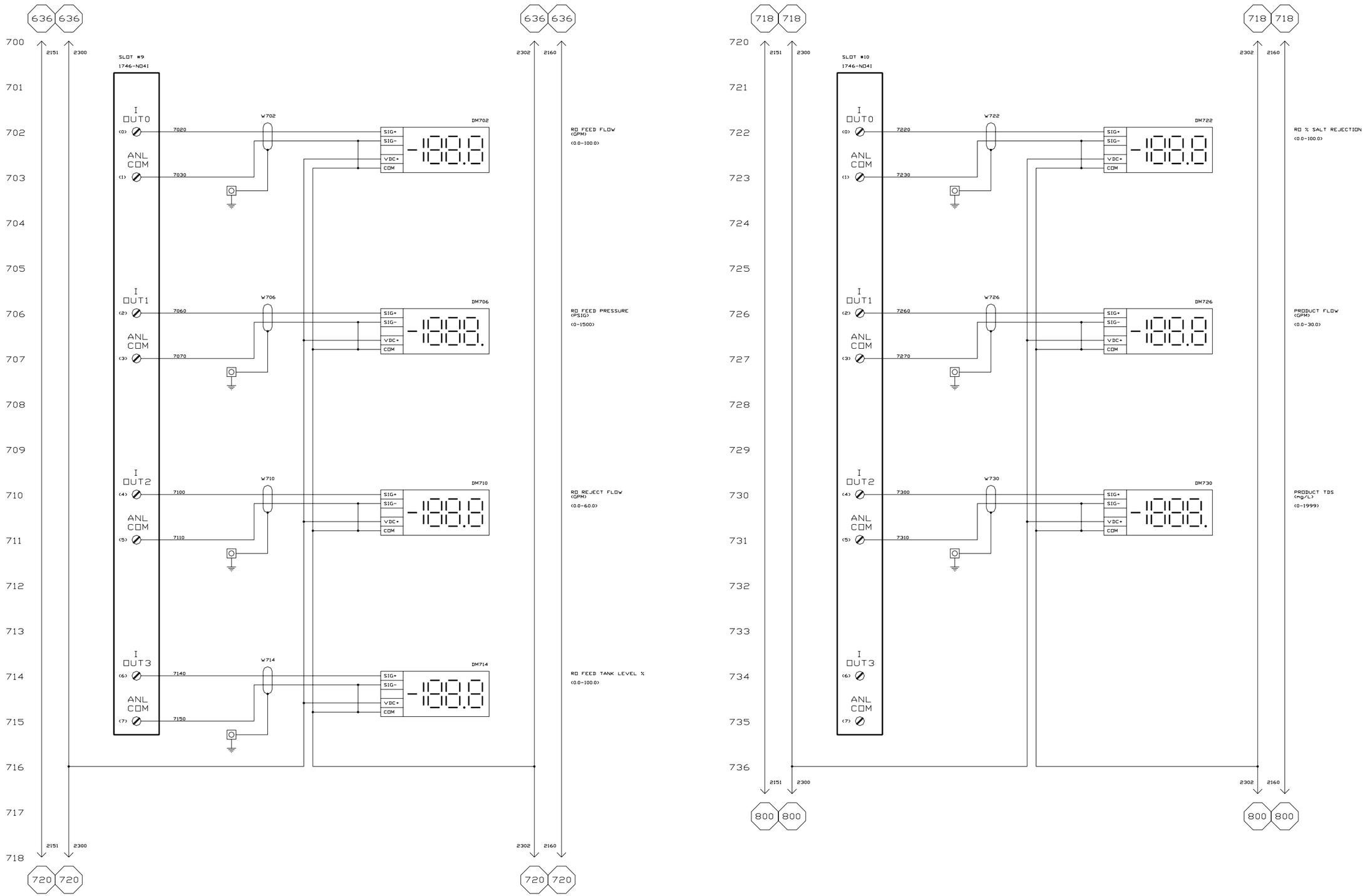

FO-1. TWPS Schematic Diagrams (Sheet 7 of 8).

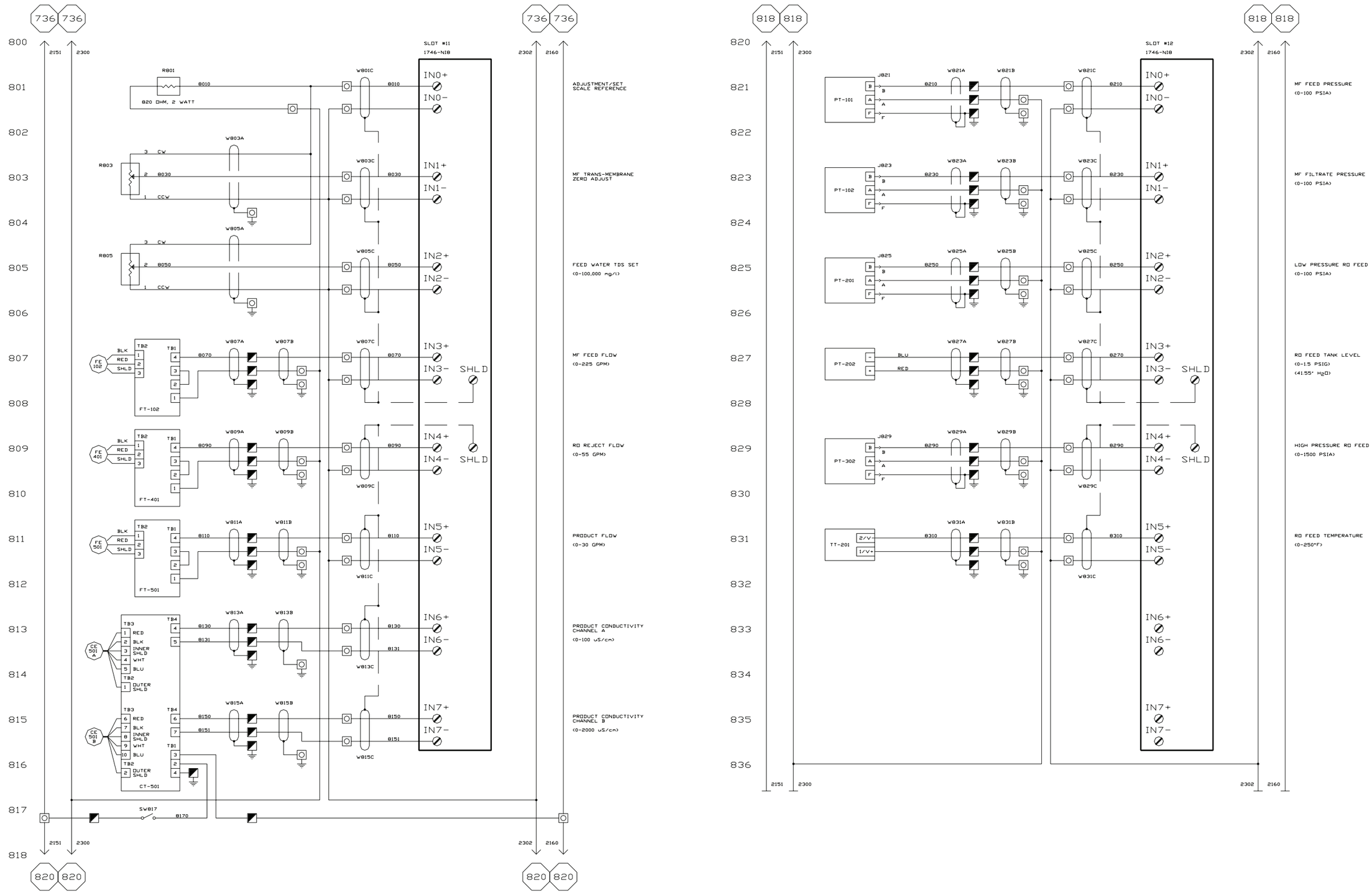

FO-1. TWPS Schematic Diagrams (Sheet 8 of 8).

NOTES:

1. ALL WIRES TO BE #18, EXCEPT FOR THE WIRE CORDS LABELED WITH A WXXX NUMBER.
2. TIGHTEN ALL WIRES PER TORQUE VALUE CHART.

TORQUE VALUES	
WIRE TYPE	IN/LBS
ALL WIRES	6.00

WIRE LEGEND

- BLACK WIRE
- WHITE WIRE
- RED WIRE
- BLUE WIRE
- WIRE CORD (CONSISTING OF RED, BLACK, WHITE WIRES)
- WIRE BUNDLE
- NYLON TIE WRAP

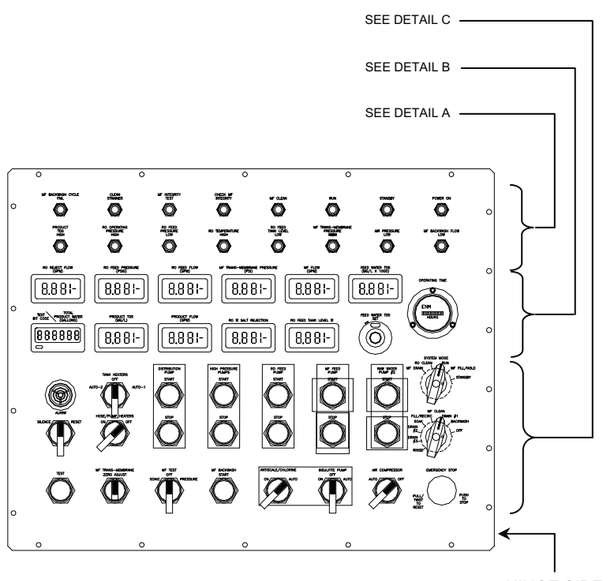

REAR OF PANEL
FOR COMPONENT REF. ONLY

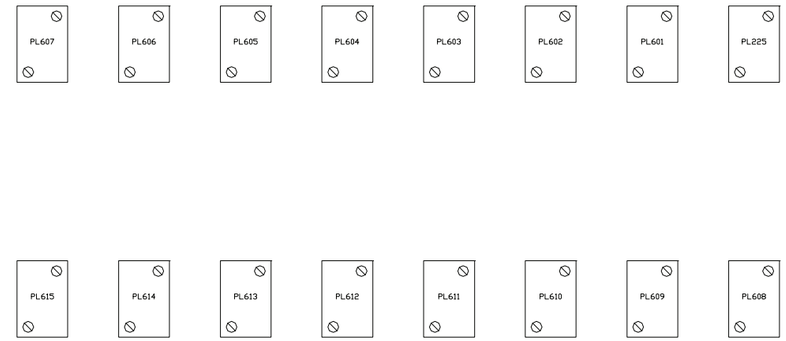

DETAIL A

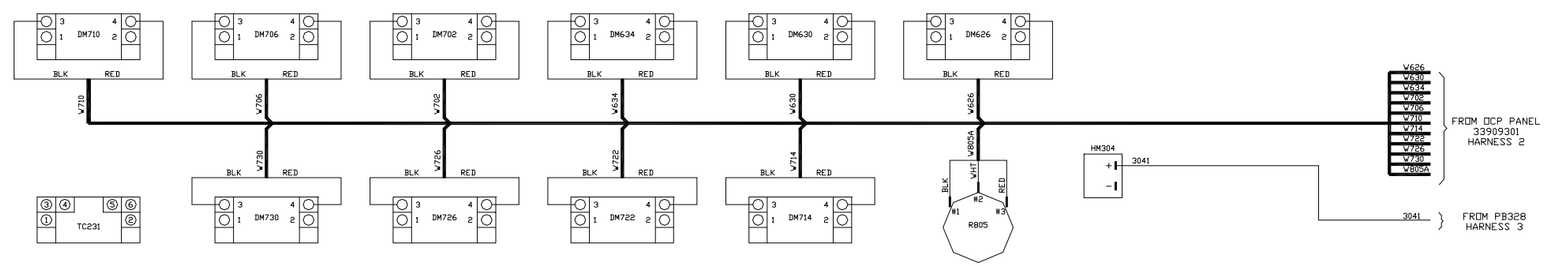

DETAIL B

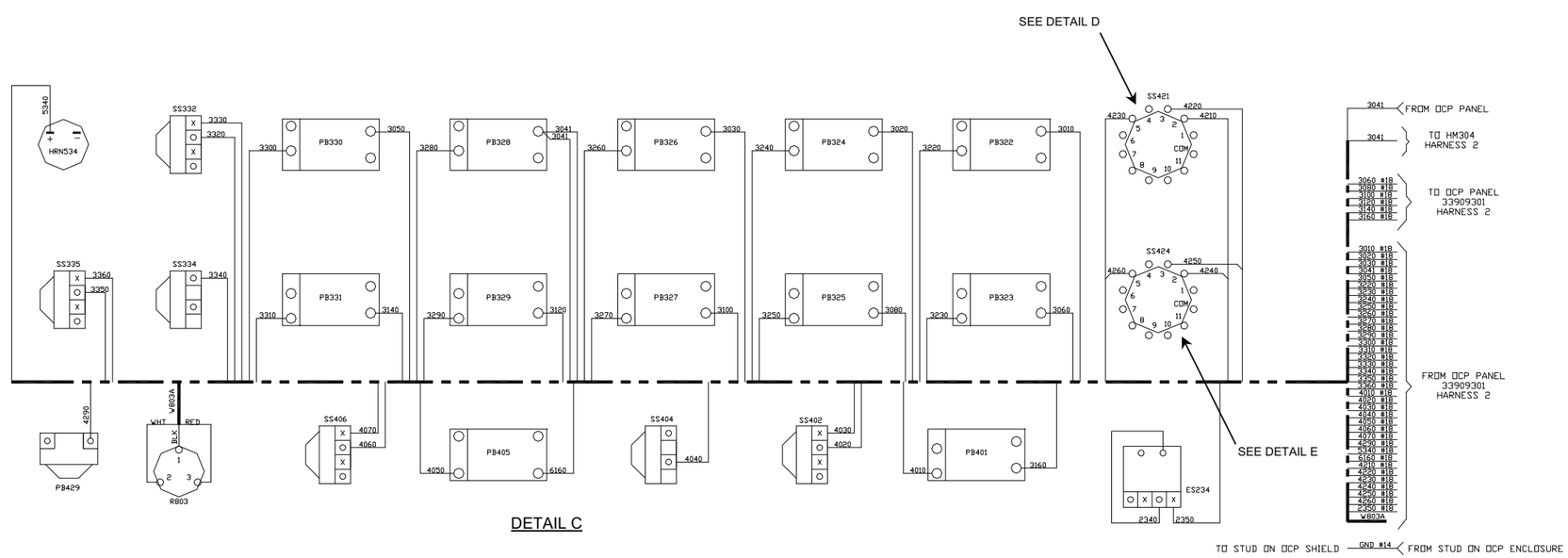

DETAIL C

FO-2. TWPS Point-to-Point Wiring Diagrams – OCP Front Panel – Power (Sheet 1 of 2).

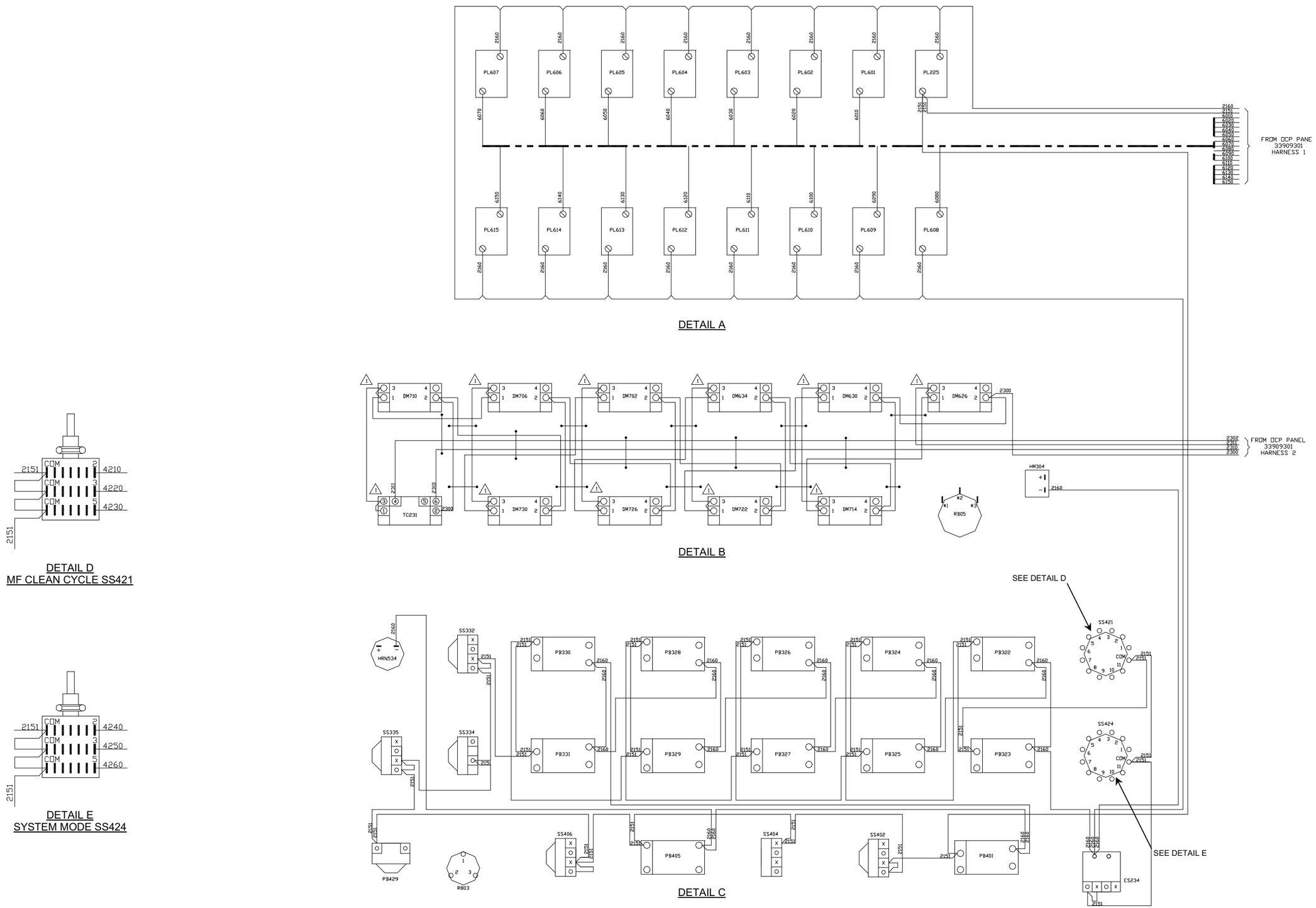

FO-2. TWPS Point-to-Point Wiring Diagrams – OCP Front Panel – Signal (Sheet 2 of 2).

NOTES:

1. CORDS W801, W803B, W805B, W807C SHIELD CONNECTION TO BE TOP SHIELD CONTACT.
   CORDS W809C, W811C, W813C, W815C SHIELD CONTACT TO BE BOTTOM SHIELD CONTACT.
   CORDS W821C, W823C, W825C, W827C SHIELD CONTACT TO BE TOP SHIELD CONTACT.
   CORDS W829C, W831C SHIELD CONTACT TO BE BOTTOM SHIELD CONTACT.

2. TIGHTEN ALL WIRES PER TORQUE VALUE CHART.

TORQUE VALUES	
WIRE TYPE	IN/LBS
TERMINAL WIRES	6.00

WIRE LEGEND

- BLACK WIRE
- WHITE WIRE
- RED WIRE
- GREEN WIRE
- BLUE WIRE
- BROWN WIRE
- ORANGE WIRE
- YELLOW WIRE
- WIRE CORD (CONSISTING OF RED, BLACK & WHITE WIRES)
- WIRE BUNDLE
- GROUND WIRE

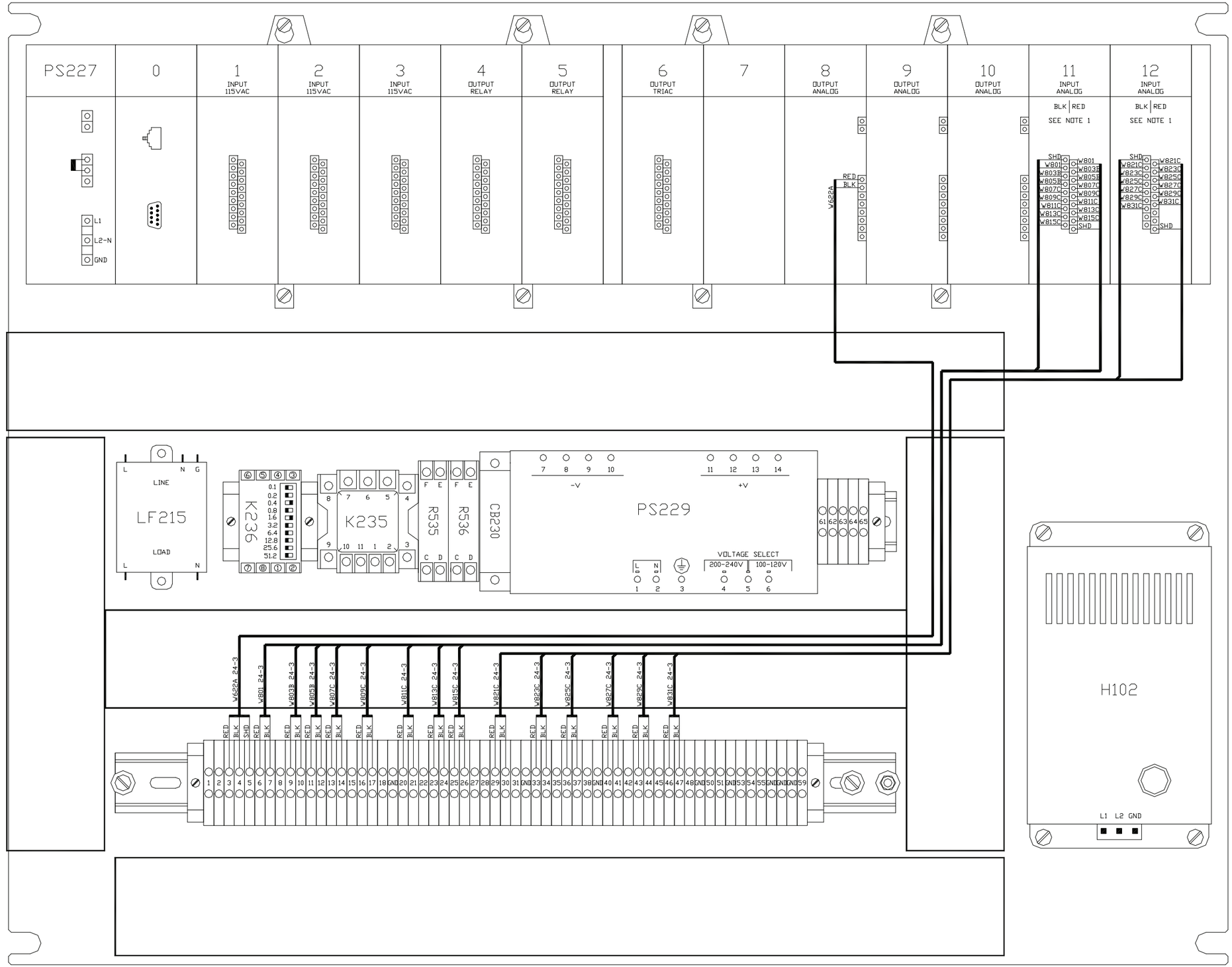

FO-3. TWPS Point-to-Point Wiring Diagrams – OCP Sub-Panel – OCP Inputs (Sheet 1 of 5).

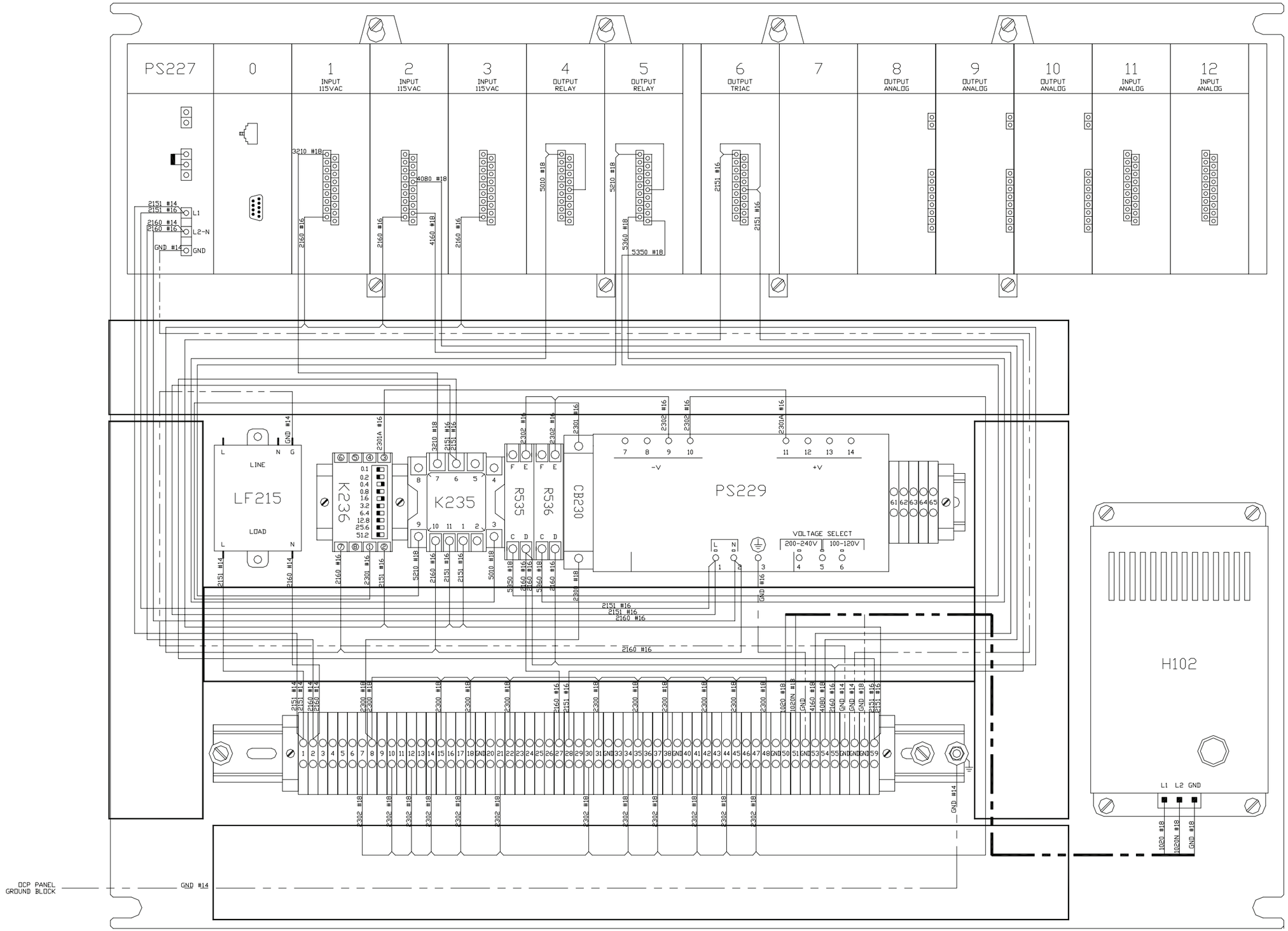

FO-3. TWPS Point-to-Point Wiring Diagrams – OCP Sub-Panel – OCP Outputs (Sheet 2 of 5).

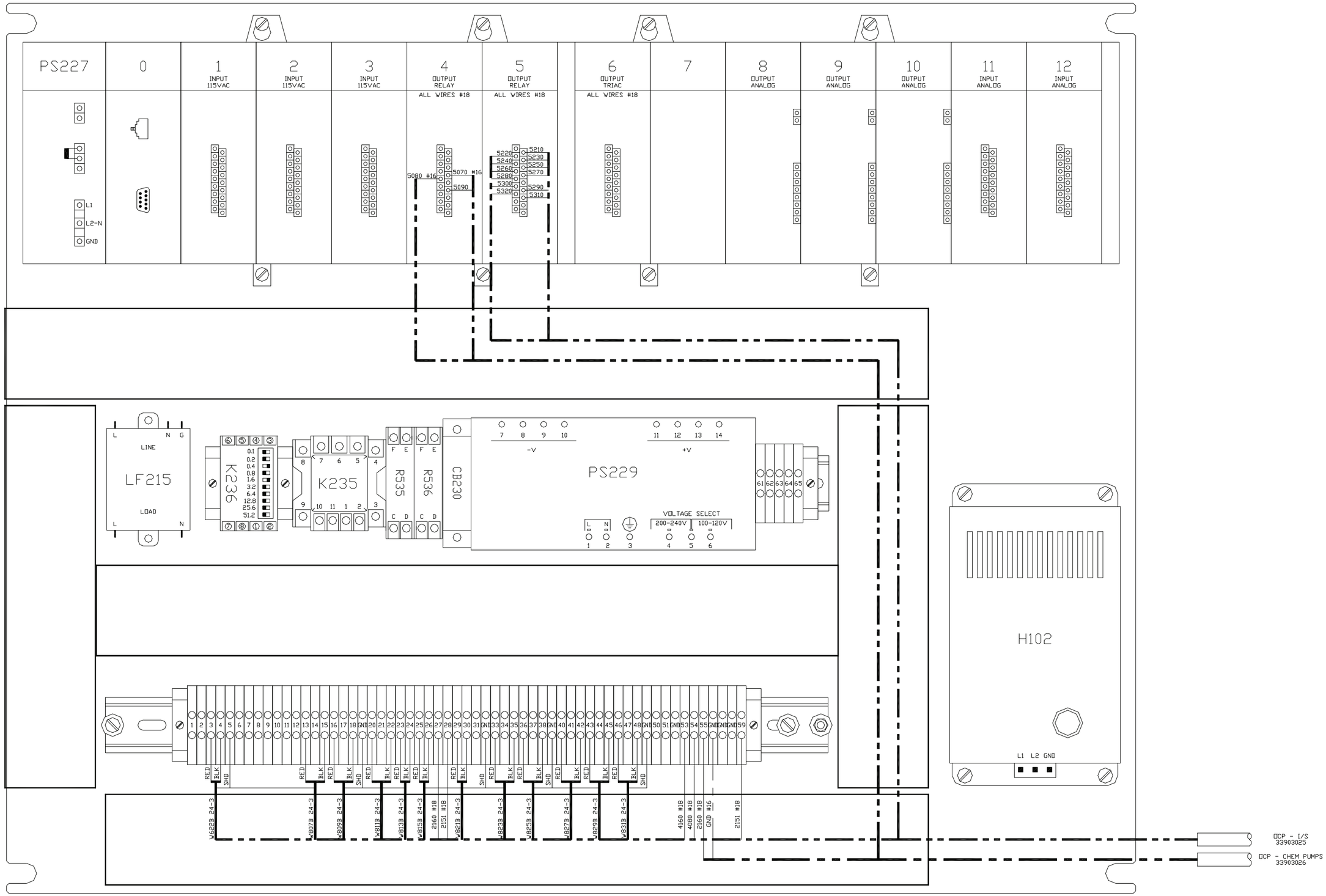

FO-3. TWPS Point-to-Point Wiring Diagrams – OCP Sub-Panel – OCP to ISP (Sheet 3 of 5).

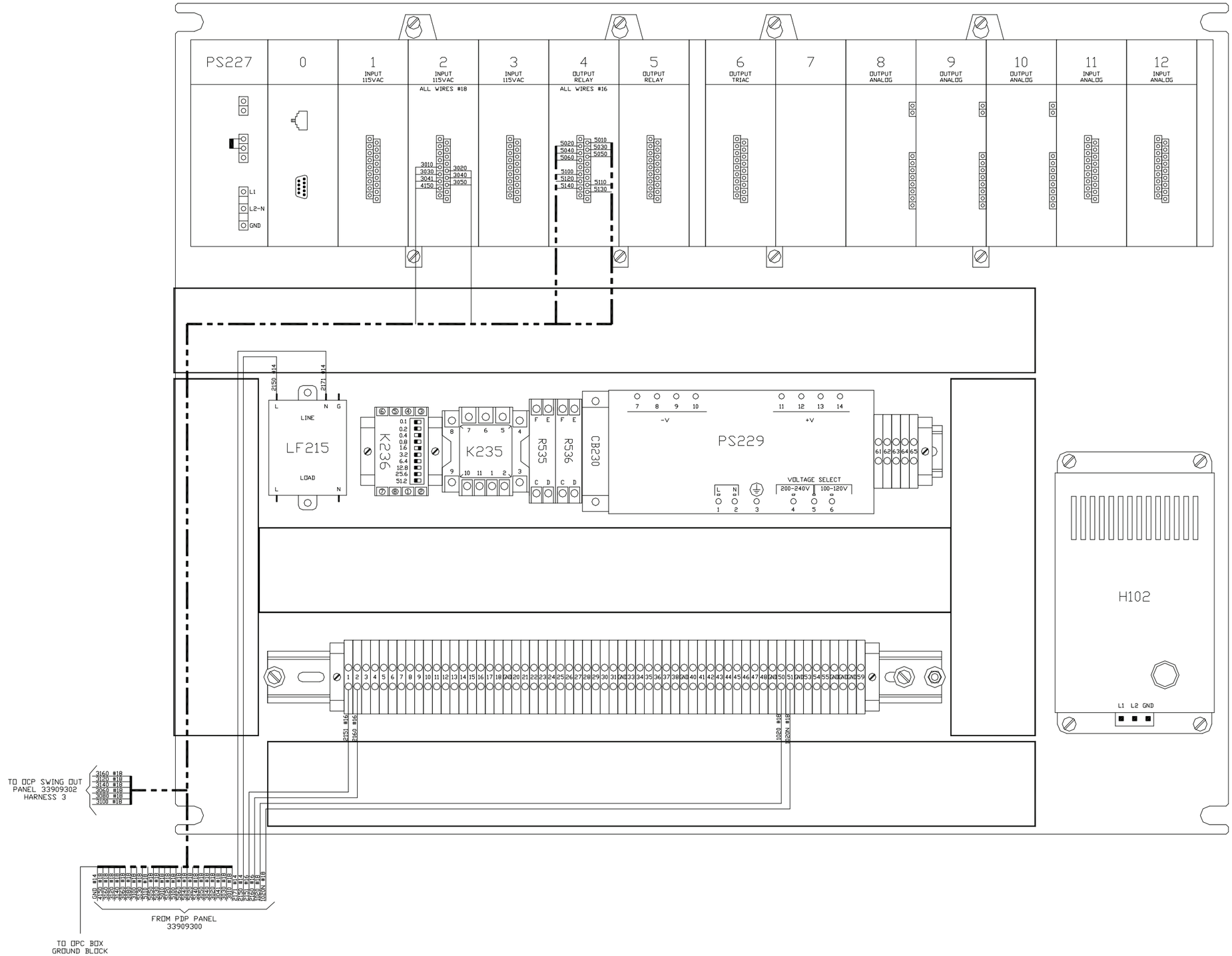

FO-3. TWPS Point-to-Point Wiring Diagrams – OCP Sub-Panel – OCP to PDP (Sheet 4 of 5).

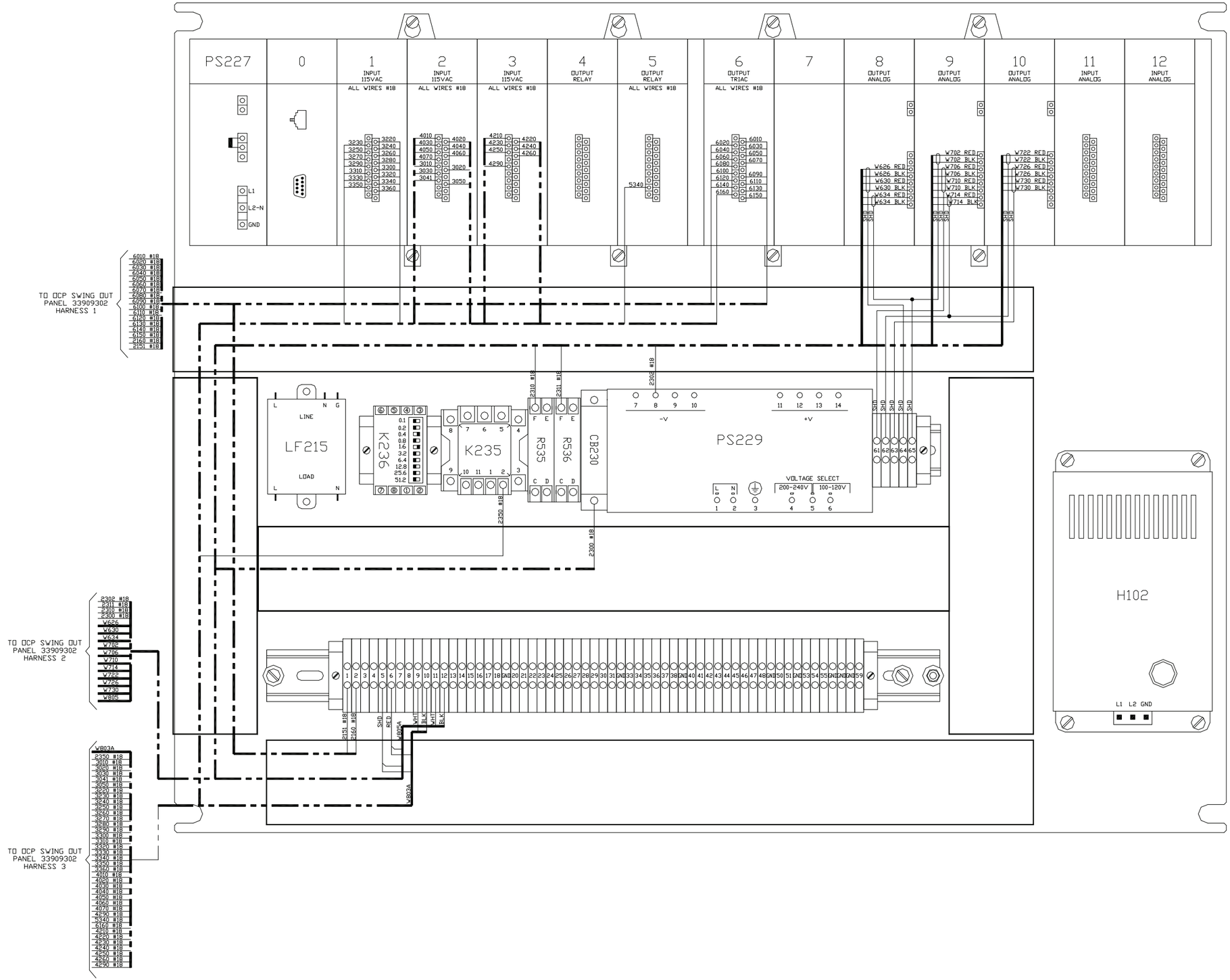

FO-3. TWPS Point-to-Point Wiring Diagrams – OCP Sub-Panel – OCP to OCP Door (Sheet 5 of 5).

NOTES:
1. TIGHTEN ALL WIRES PER TORQUE VALUE CHART.

TORQUE VALUES		
WIRE TYPE	IN/LBS	
CONTROL WIRES	6.00	
POWER WIRES	16.00	$
DIST. BLOCK WIRES	30.00	*
MAIN CIRCUIT BREAKER WIRES	35.00	#

WIRE LEGEND

- BLACK WIRE
- WHITE WIRE
- RED WIRE
- GREEN WIRE
- BLUE WIRE
- BROWN WIRE
- ORANGE WIRE
- YELLOW WIRE
- WIRE BUNDLE
- GROUND WIRE

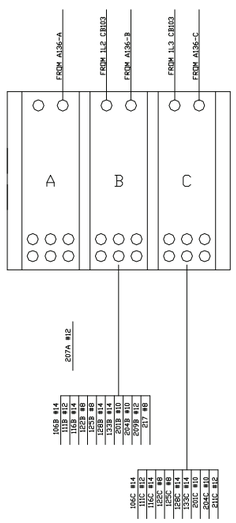

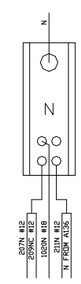

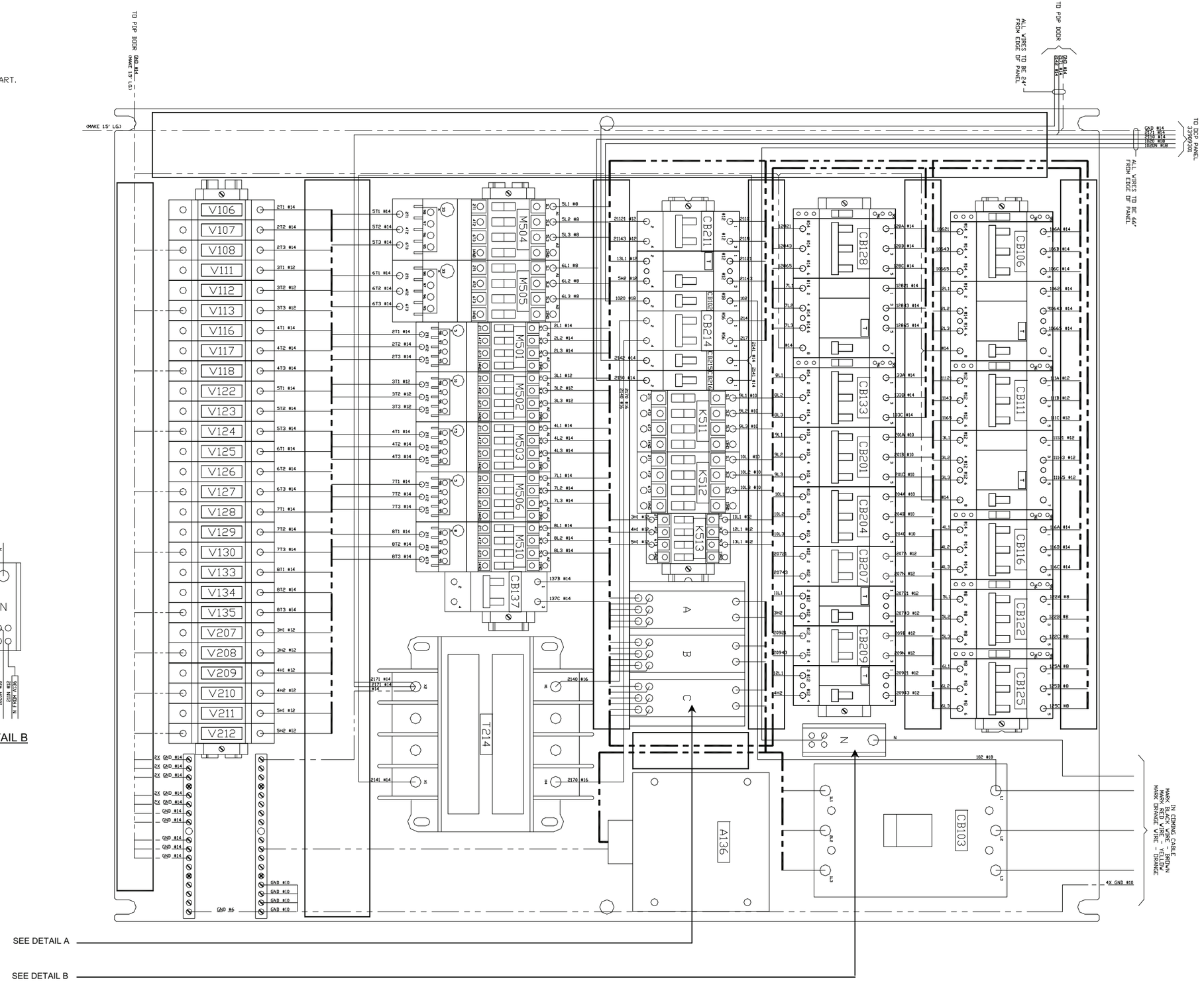

FO-4. TWPS Point-to-Point Wiring Diagrams – PDP Sub-Panel – Power (Sheet 1 of 4).

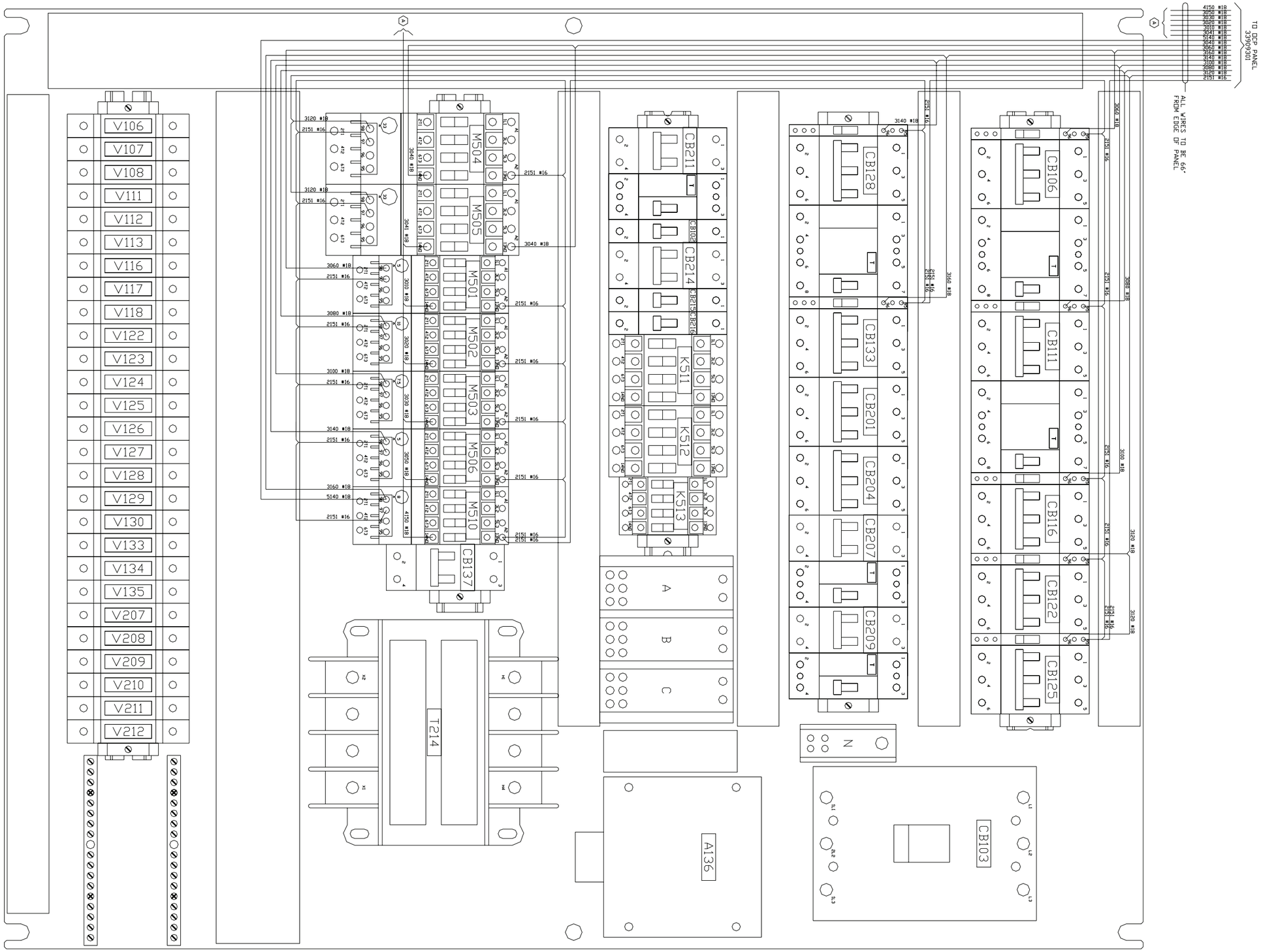

FO-4. TWPS Point-to-Point Wiring Diagrams – PDP Sub-Panel – Signal (Sheet 2 of 4).

FO-4. TWPS Point-to-Point Wiring Diagrams – PDP Sub-Panel – Coil (Sheet 3 of 4).

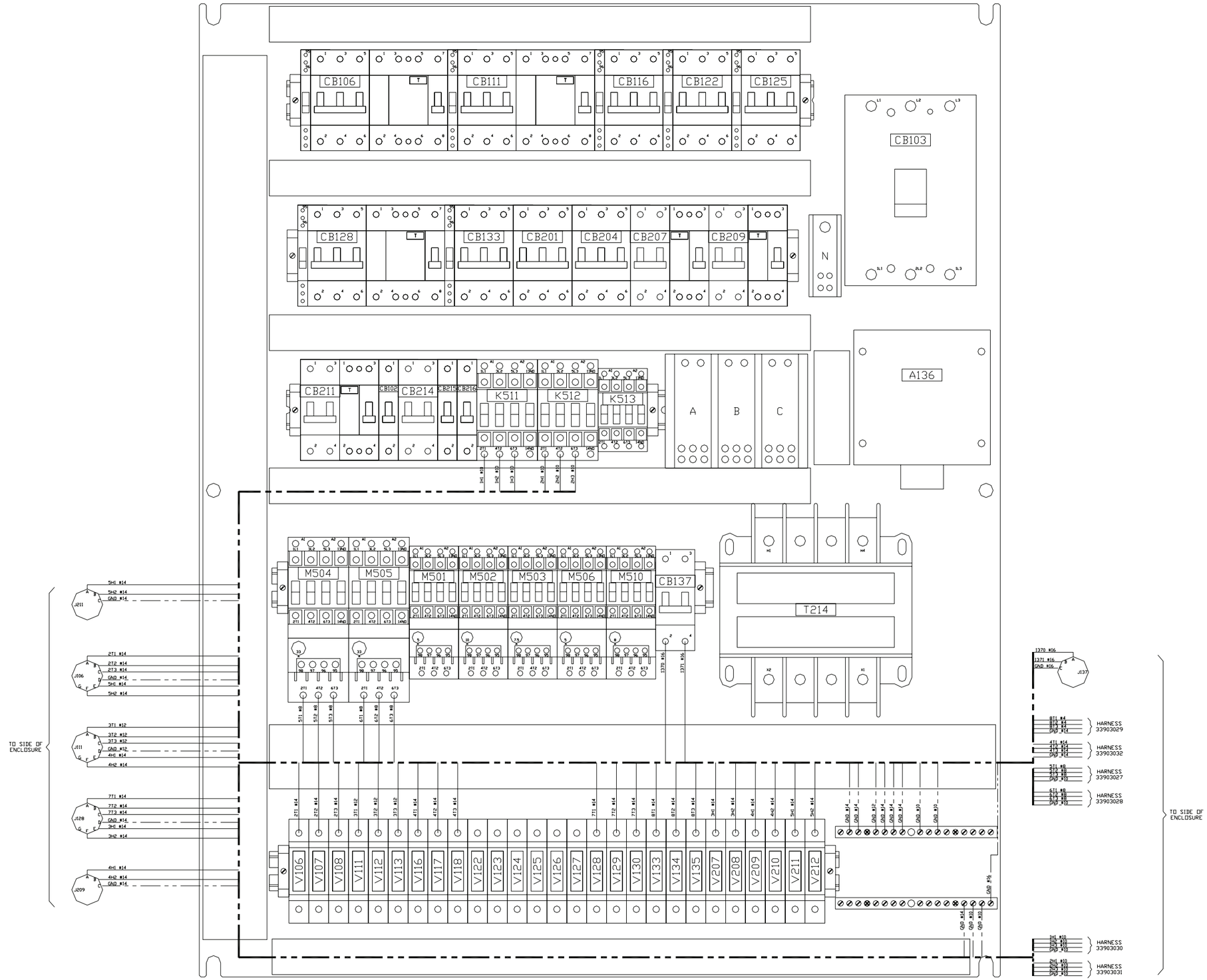

FO-4. TWPS Point-to-Point Wiring Diagrams – PDP Sub-Panel – External Power (Sheet 4 of 4).

NOTES:

⚠ ALL WIRES COMING FROM THE VALVE SOLENIODS ARE BLACK.

2. TIGHTEN ALL WIRES PER TORQUE VALUE CHART.

TORQUE VALUES	
WIRE TYPE	IN/LBS
TERMINAL WIRES	6.00

WIRE LEGEND

- BLACK WIRE
- WHITE WIRE
- RED WIRE
- GREEN WIRE
- BLUE WIRE
- BROWN WIRE
- ORANGE WIRE
- YELLOW WIRE
- WIRE CORD (CONSISTING OF RED, BLACK & WHITE WIRES)
- WIRE BUNDLE
- GROUND WIRE

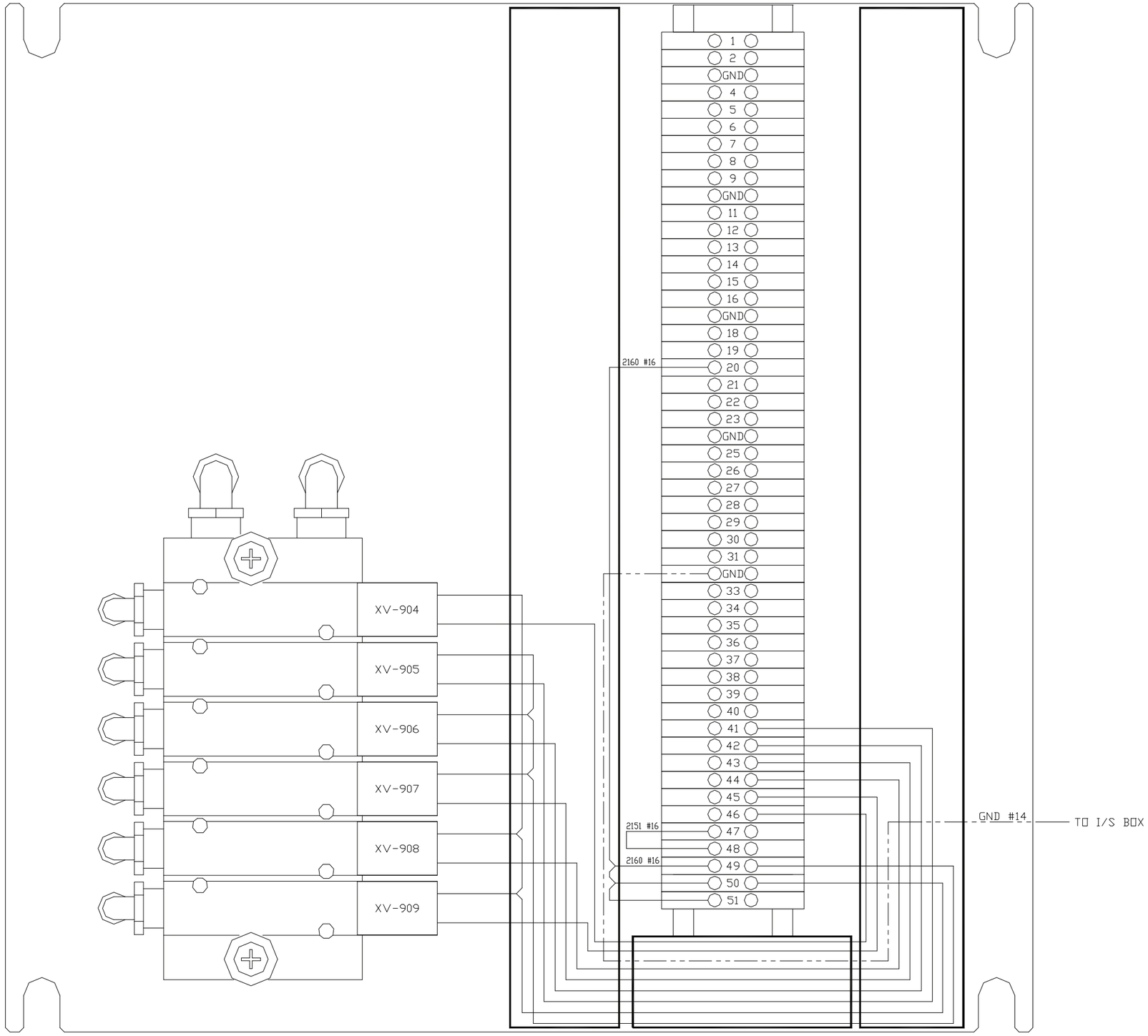

FO-5. Instrument / Solenoid Sub-Panel – OCP Inputs (Sheet 1 of 5).

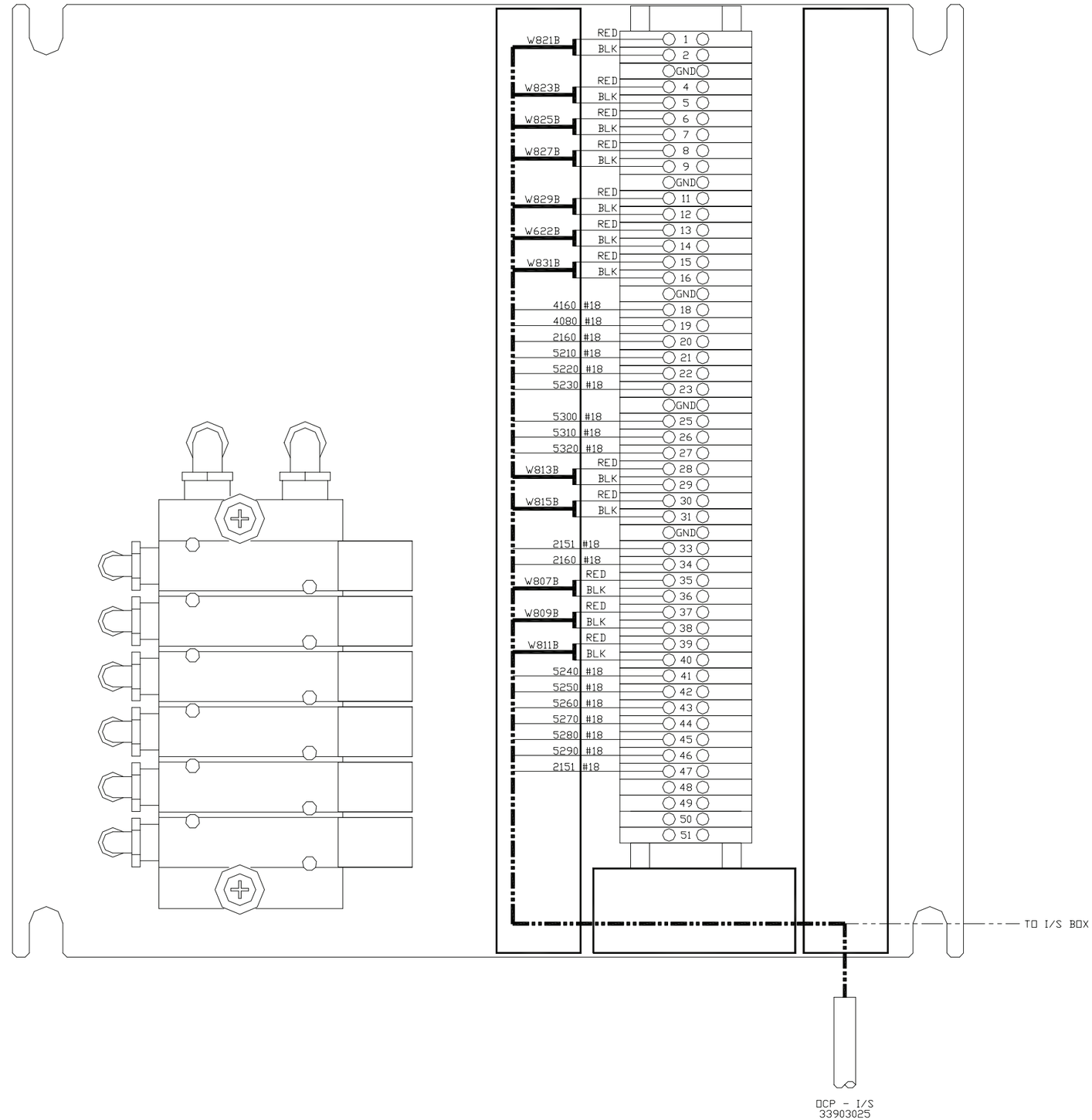

FO-5. Instrument / Solenoid Sub-Panel – OCP Inputs (Sheet 2 of 5).

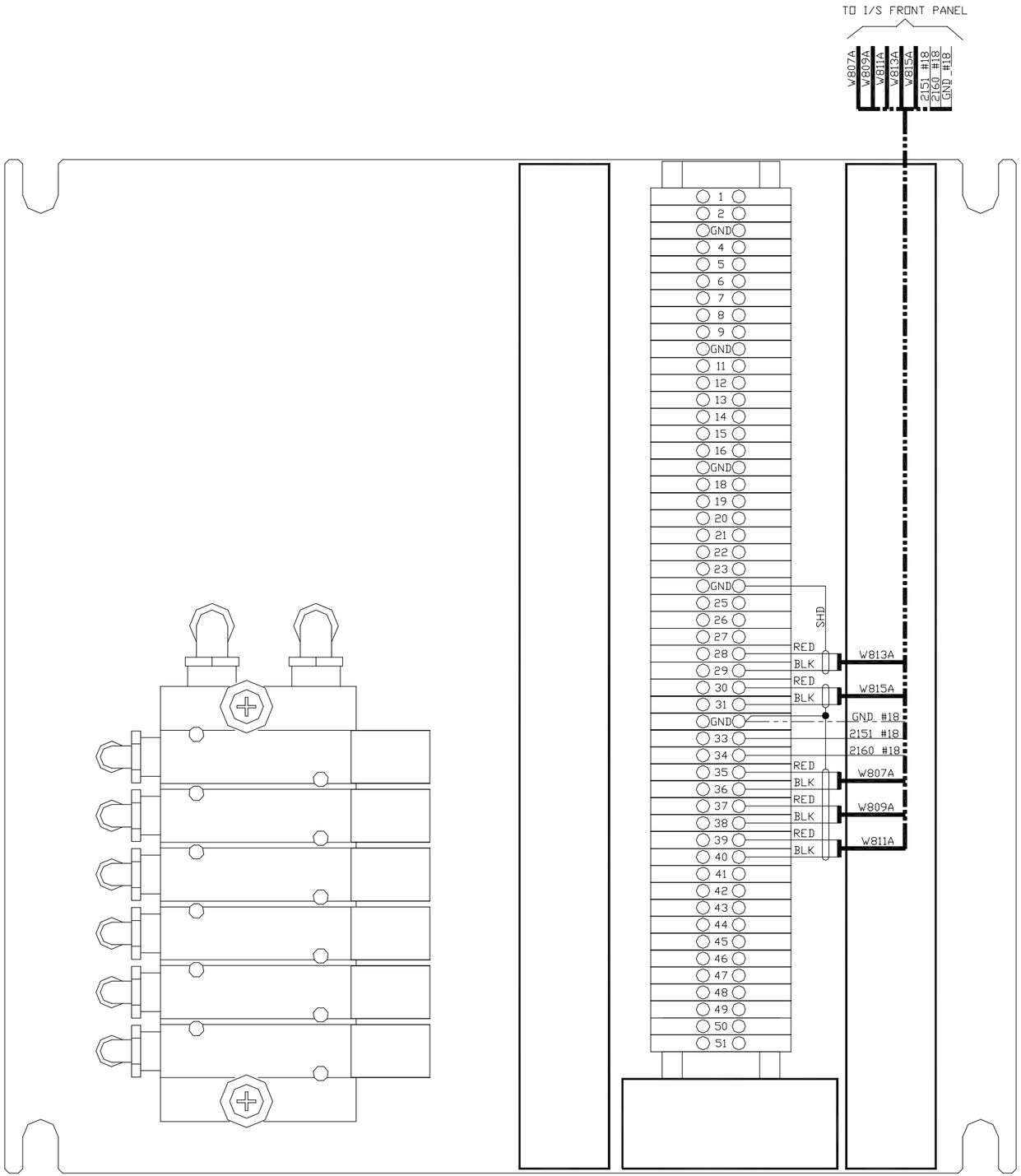

FO-5. Instrument / Solenoid Sub-Panel – OCP Inputs (Sheet 3 of 5)

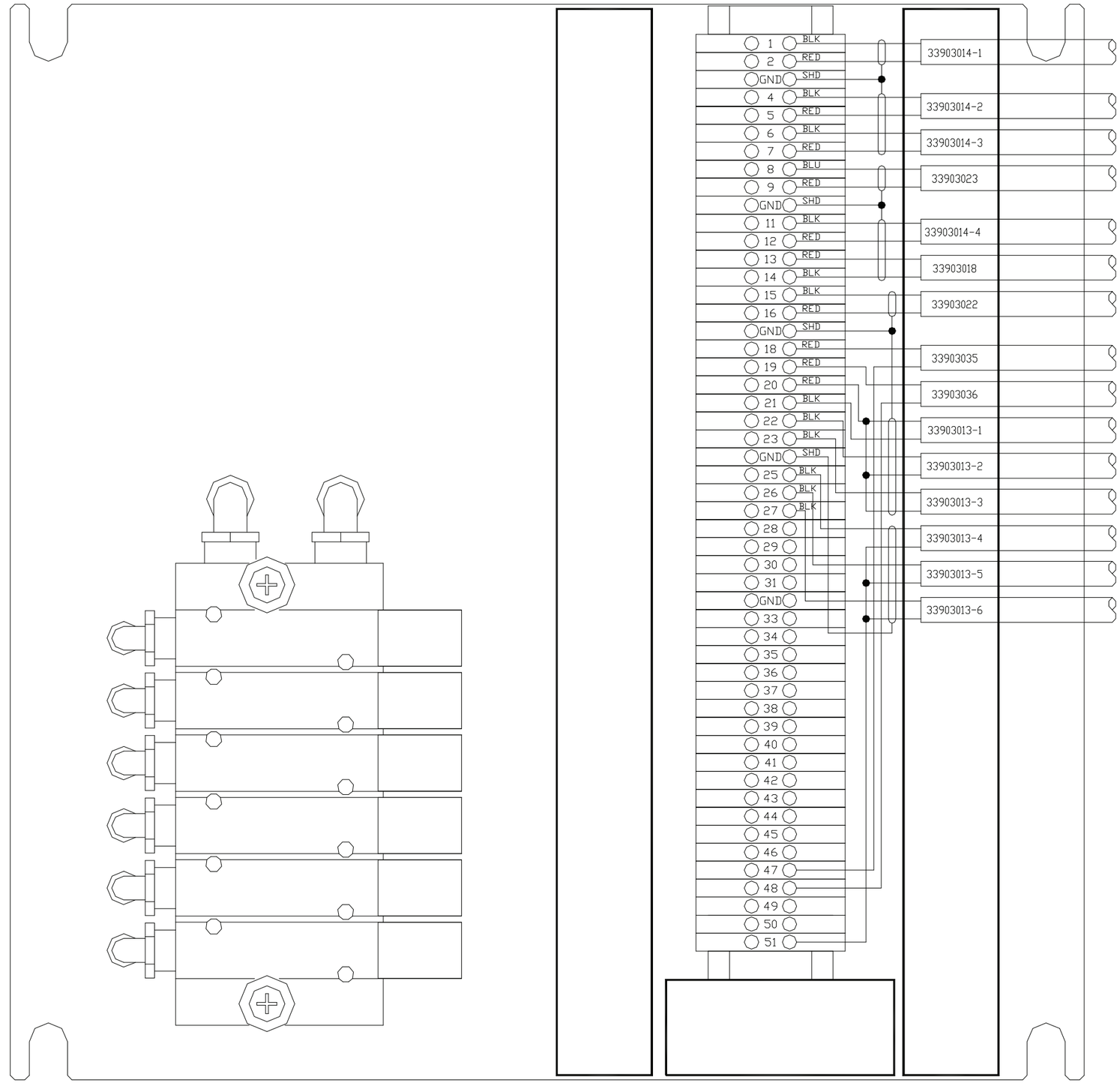

FO-5. Instrument / Solenoid Sub-Panel – OCP Inputs (Sheet 4 of 5).

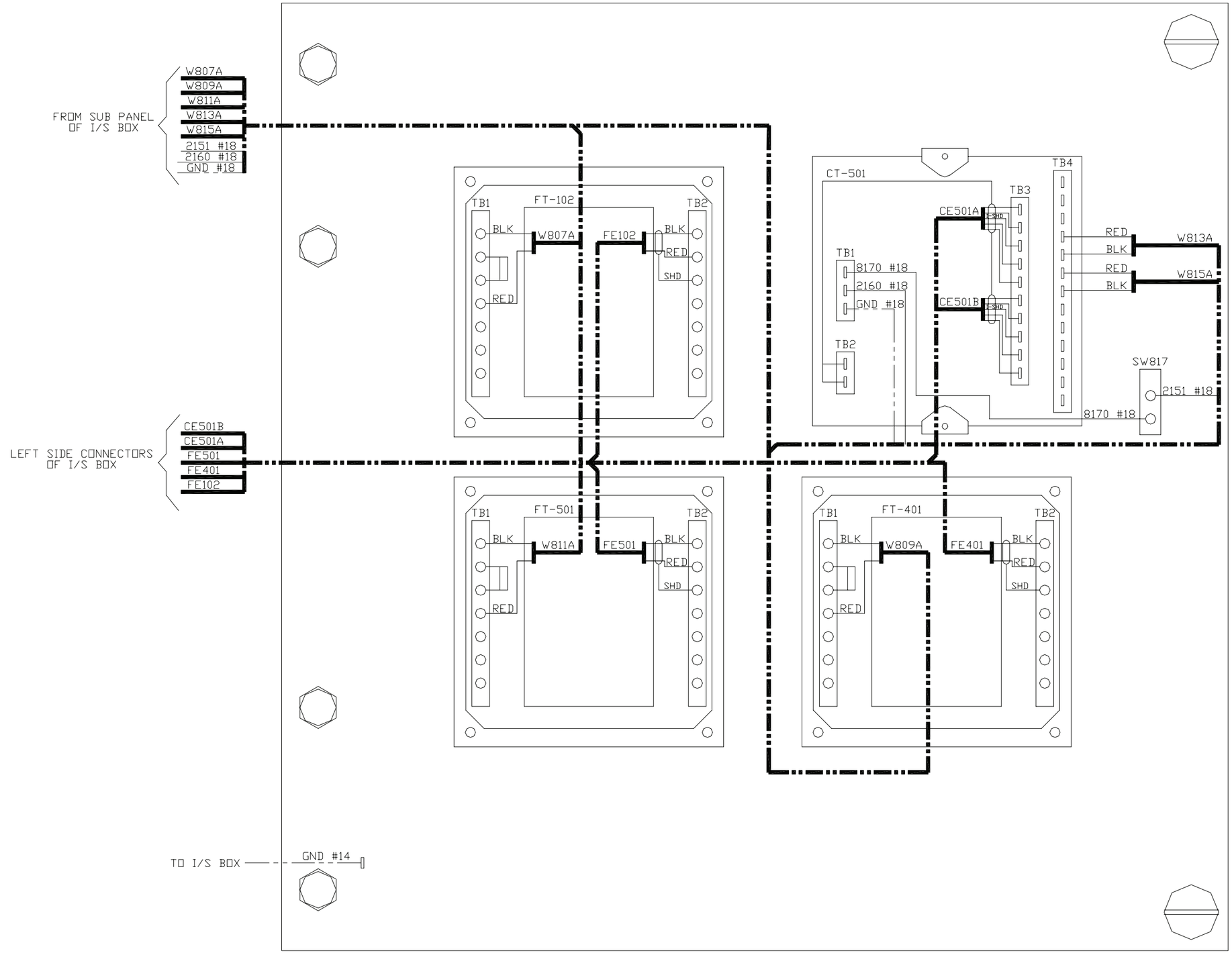

FO-5. Instrument / Solenoid Sub-Panel – Rear View of Panel (Sheet 5 of 5).

By Order of the Secretary of the Army:

GEORGE W. CASEY, JR.
General, United States Army
Chief of Staff

Official:

JOYCE E. MORROW
Administrative Assistant to the
Secretary of the Army
0810802

By Direction of the Commandant of the Marine Corps

Official:

L. V. BRADLEY
Director
Ground Transportation and Engineering Systems
Marine Corps Systems Command
Quantico, VA 22134

DISTRIBUTION: To be distributed in accordance with the Initial Distribution Number (IDN) 256960, requirements for TM 10-4610-309-23 (Army), TM 10802A-OI/1A-2 (Marine Corps.).

Marine Corps Distribution: PCN 184 108021 00

These are the instructions for sending an electronic 2028

The following format must be used if submitting an electronic 2028. The subject line must be exactly the same and all fields must be included; however, only the following fields are mandatory: 1, 3, 4, 5, 6, 7, 8, 9, 10, 13, 15, 16, 17 and 27.

From: **"Whomever" whomever@avma27.army.mil**
To: **tacom-tech-pubs@tacom.army.mil**

Subject DA Form 2028

1. ***From:*** Joe Smith
2. ***Unit:*** home
3. ***Address:*** 4300 Park
4. ***City:*** Hometown
5. ***St:*** MO
6. ***Zip:*** 77777
7. ***Date Sent:*** 19-OCT-93
8. ***Pub no:*** 55-1915-200-10
9. ***Pub Title:*** TM
10. ***Publication Date:*** 11-APR-88
11. ***Change Number:*** 12
12. ***Submitter Rank:*** MSG
13. ***Submitter Fname:*** Joe
14. ***Submitter Mname:*** T
15. ***Submitter Lname:*** Smith
16. ***Submitter Phone:*** 123-123-1234
17. ***Problem:*** 1
18. ***Page:*** 1
19. ***Paragraph:*** 3
20. ***Line:*** 4
21. ***NSN:*** 5
22. ***Reference:*** 6
23. ***Figure:*** 7
24. ***Table:*** 8
25. ***Item:*** 9
26. ***Total:*** 123
27. ***Text:***
This is the text for the problem below line 27.

RECOMMENDED CHANGES TO PUBLICATIONS AND BLANK FORMS For use of this form, see AR 25-30; the proponent agency is OAASA	Use Part II *(reverse)* for Repair Parts and Special Tool Lists (RPSTL) and Supply Catalogs/Supply Manuals (SC/SM).	DATE
TO: *(Forward to proponent of publication or form) (Include ZIP Code)*	**FROM:** *(Activity and location) (Include ZIP Code)*	

PART I - ALL PUBLICATIONS (EXCEPT RPSTL AND SC/SM) AND BLANK FORMS

PUBLICATION/FORM NUMBER	DATE	TITLE
TM 10-4610-309-23		Tactical Water Purification System

ITEM	PAGE	PARA-GRAPH	LINE	FIGURE NO.	TABLE	RECOMMENDED CHANGES AND REASON

** Reference to line numbers within the paragraph or subparagraph.*

TYPED NAME, GRADE OR TITLE	TELEPHONE EXCHANGE/AUTOVON, PLUS EXTENSION	SIGNATURE

DA FORM 2028, FEB 74 REPLACES DA FORM 2028, 1 DEC 68, WHICH WILL BE USED.

USAPA V3.01

TO: *(Forward direct to addressee listed in publication)*	**FROM:** *(Activity and location) (Include ZIP Code)*	DATE

PART II - REPAIR PARTS AND SPECIAL TOOL LISTS AND SUPPLY CATALOGS/SUPPLY MANUALS

PUBLICATION NUMBER	DATE	TITLE

PAGE NO.	COLM NO.	LINE NO.	NATIONAL STOCK NUMBER	REFERENCE NO.	FIGURE NO.	ITEM NO.	TOTAL NO. OF MAJOR ITEMS SUPPORTED	RECOMMENDED ACTION

PART III - REMARKS *(Any general remarks or recommendations, or suggestions for improvement of publications and blank forms. Additional blank sheets may be used if more space is needed.)*

TYPED NAME, GRADE OR TITLE	TELEPHONE EXCHANGE/AUTOVON, PLUS EXTENSION	SIGNATURE

USAPA V3.01

RECOMMENDED CHANGES TO PUBLICATIONS AND BLANK FORMS For use of this form, see AR 25-30; the proponent agency is OAASA	Use Part II *(reverse)* for Repair Parts and Special Tool Lists (RPSTL) and Supply Catalogs/Supply Manuals (SC/SM).	DATE
TO: *(Forward to proponent of publication or form) (Include ZIP Code)*	**FROM:** *(Activity and location) (Include ZIP Code)*	

PART I - ALL PUBLICATIONS (EXCEPT RPSTL AND SC/SM) AND BLANK FORMS

PUBLICATION/FORM NUMBER	DATE	TITLE
TM 10-4610-309-23		Tactical Water Purification System

ITEM	PAGE	PARA-GRAPH	LINE	FIGURE NO.	TABLE	RECOMMENDED CHANGES AND REASON

** Reference to line numbers within the paragraph or subparagraph.*

TYPED NAME, GRADE OR TITLE	TELEPHONE EXCHANGE/AUTOVON, PLUS EXTENSION	SIGNATURE

TO: *(Forward direct to addressee listed in publication)*	**FROM:** *(Activity and location) (Include ZIP Code)*	DATE

PART II - REPAIR PARTS AND SPECIAL TOOL LISTS AND SUPPLY CATALOGS/SUPPLY MANUALS

PUBLICATION NUMBER	DATE	TITLE

PAGE NO.	COLM NO.	LINE NO.	NATIONAL STOCK NUMBER	REFERENCE NO.	FIGURE NO.	ITEM NO.	TOTAL NO. OF MAJOR ITEMS SUPPORTED	RECOMMENDED ACTION

PART III - REMARKS *(Any general remarks or recommendations, or suggestions for improvement of publications and blank forms. Additional blank sheets may be used if more space is needed.)*

TYPED NAME, GRADE OR TITLE	TELEPHONE EXCHANGE/AUTOVON, PLUS EXTENSION	SIGNATURE

USAPA V3.01

RECOMMENDED CHANGES TO PUBLICATIONS AND BLANK FORMS For use of this form, see AR 25-30; the proponent agency is OAASA	Use Part II *(reverse)* for Repair Parts and Special Tool Lists (RPSTL) and Supply Catalogs/Supply Manuals (SC/SM).	DATE
TO: *(Forward to proponent of publication or form) (Include ZIP Code)*	**FROM:** *(Activity and location) (Include ZIP Code)*	

PART I - ALL PUBLICATIONS (EXCEPT RPSTL AND SC/SM) AND BLANK FORMS

PUBLICATION/FORM NUMBER	DATE	TITLE
TM 10-4610-309-23		Tactical Water Purification System

ITEM	PAGE	PARA-GRAPH	LINE	FIGURE NO.	TABLE	RECOMMENDED CHANGES AND REASON

** Reference to line numbers within the paragraph or subparagraph.*

TYPED NAME, GRADE OR TITLE	TELEPHONE EXCHANGE/AUTOVON, PLUS EXTENSION	SIGNATURE

TO: *(Forward direct to addressee listed in publication)*	**FROM:** *(Activity and location) (Include ZIP Code)*	DATE

PART II - REPAIR PARTS AND SPECIAL TOOL LISTS AND SUPPLY CATALOGS/SUPPLY MANUALS

PUBLICATION NUMBER	DATE	TITLE

PAGE NO.	COLM NO.	LINE NO.	NATIONAL STOCK NUMBER	REFERENCE NO.	FIGURE NO.	ITEM NO.	TOTAL NO. OF MAJOR ITEMS SUPPORTED	RECOMMENDED ACTION

PART III - REMARKS *(Any general remarks or recommendations, or suggestions for improvement of publications and blank forms. Additional blank sheets may be used if more space is needed.)*

TYPED NAME, GRADE OR TITLE	TELEPHONE EXCHANGE/AUTOVON, PLUS EXTENSION	SIGNATURE

USAPA V3.01

The Metric System and Equivalents

Linear Measure

1 centimeter = 10 millimeters = .39 inch
1 decimeter = 10 centimeters = 3.94 inches
1 meter = 10 decimeters = 39.37 inches
1 dekameter = 10 meters = 32.8 feet
1 hectometer = 10 dekameters = 328.08 feet
1 kilometer = 10 hectometers = 3,280.8 feet

Weights

1 centigram = 10 milligrams = .15 grain
1 decigram = 10 centigrams = 1.54 grains
1 gram = 10 decigrams = .035 ounce
1 dekagram = 10 grams = .35 ounce
1 hectogram = 10 dekagrams = 3.52 ounces
1 kilogram = 10 hectograms = 2.2 pounds
1 quintal = 100 kilograms = 220.46 pounds
1 metric ton = 10 quintals = 1.1 short tons

Liquid Measure

1 centiliter = 10 milliliters = .34 fl. ounce
1 deciliter = 10 centiliters = 3.38 fl. ounces
1 liter = 10 deciliters = 33.81 fl. ounces
1 dekaliter = 10 liters = 2.64 gallons
1 hectoliter = 10 dekaliters = 26.42 gallons
1 kiloliter = 10 hectoliters = 264.18 gallons

Square Measure

1 sq. centimeter = 100 sq. millimeters = .155 sq. inch
1 sq. decimeter = 100 sq. centimeters = 15.5 sq. inches
1 sq. meter (centare) = 100 sq. decimeters = 10.76 sq. feet
1 sq. dekameter (are) = 100 sq. meters = 1,076.4 sq. feet
1 sq. hectometer (hectare) = 100 sq. dekameters = 2.47 acres
1 sq. kilometer = 100 sq. hectometers = .386 sq. mile

Cubic Measure

1 cu. centimeter = 1000 cu. millimeters = .06 cu. inch
1 cu. decimeter = 1000 cu. centimeters = 61.02 cu. lathes
1 cu. meter = 1000 cu. decimeters = 35.31 feet

Approximate Conversion Factors

To change	*To*	*Multiply by*
inches	centimeters	2.540
feet	meters	.305
yards	meters	.914
miles	kilometers	1.609
square inches	square centimeters	6.451
square feet	square meters	.093
square yards	square meters	.836
square miles	square kilometers	2.590
acres	square hectometers	.405
cubic feet	cubic meters	.028
cubic yards	cubic meters	.765
fluid ounces	milliliters	29.573
pints	liters	.473
quarts	liters	.946
gallons	liters	3.785
ounces	grams	28.349
pounds	kilograms	.454
short tons	metric tons	.907
pound-feet	newton-meters	1.356
pound-inches	newton-meters	.11296

To change	*To*	*Multiply by*
ounce-inches	newton-meters	.007062
centimeters	inches	.394
meters	feet	3.280
meters	yards	1.094
kilometers	miles	.621
square centimeters	square inches	.155
square meters	square feet	10.764
square meters	square yards	1.196
square kilometers	square miles	.386
square hectometers	acres	2.471
cubic meters	cubic feet	35.315
cubic meters	cubic yards	1.308
milliliters	fluid ounces	.034
liters	pints	2.113
liters	quarts	1.057
liters	gallons	.264
grams	ounces	.035
metric tons	short tons	1.102
kilograms	pounds	2.205

Temperature (Exact)

ºF Fahrenheit temperature 5/9 (after subtracting 32) ºC Celsius temperature

PIN: 084825-000